CALIFORNIA COASTAL COMMISSION
NORTH CENTRAL COAST DISTRICT
45 FREMONT, SUITE 2000
SAN FRANCISCO, CA 94105-2219
VOICE AND TDD (415) 904-5260
FAX (415) 904-5400

RECORD PACKET COPY

F 7a

Filed: April 6, 1999
49th Day: May 20, 1999 (waived)
Staff: JL/CLK – SF
Staff Report: April 27, 2000
Hearing Date: May 12, 2000

DE NOVO REVIEW: PACIFIC RIDGE DEVELOPMENT ISSUES SUMMARY REPORT

APPEAL NO.:	**A-1-HMB-99-022**
APPLICANTS:	**Ailanto Properties**
AGENT:	**Robert Henry**
LOCAL GOVERNMENT:	**City of Half Moon Bay**
SUBSTANTIAL ISSUE:	The Commission found Substantial Issue for the appeal on March 17, 2000.
PROJECT LOCATION:	Adjacent to the eastern ends of Grandview Boulevard and Terrace Avenue, north of Highway 92 and east of Highway 1 in the City of Half Moon Bay, San Mateo County.
PROJECT DESCRIPTION:	The proposed development includes subdivision of 114 acres into 145 lots, construction of a detached single-family home on each lot, streets, open space parcels and neighborhood park areas.
APPELLANTS:	Commissioner Sara Wan Commissioner Mike Reilly Eleanor Wittrup and George Carman
SUBSTANTIVE FILE DOCUMENTS:	See Appendix A

1.0 STAFF NOTE

1.1 Overview

On March 17, 2000 the Commission found that the appeals submitted regarding this proposed project raise a substantial issue with respect to the grounds on which they were filed. This staff report represents the next step in the Commission's review process of the proposed development project. This report contains a description of the project as currently proposed by Ailanto Properties and a preliminary analysis of issues raised by the project under the Half Moon Bay Local Coastal Program.

Section 13057(d) of the Commission's regulations states that where the Executive Director of the Commission determines that public comment and Commission discussion would facilitate preparation of a final staff recommendation, the Executive Director may elect to first prepare a partial staff report that does not contain a recommendation on whether the Commission should grant the application, with or without conditions, or deny the application. Consistent with the regulations, staff recommends that the Commission open the public hearing on May 13, 2000 and accept public testimony from the applicant and persons supporting and opposing the proposed project. Following such testimony, the Commission may wish to engage in discussion of the project and/or the issues. The staff recommends that the Commission then continue the public hearing to a subsequent Commission meeting, prior to which staff will publish a written recommendation for action by the Commission.

1.2 Proposed developments in the San Mateo County/Half Moon Bay coastal area raise significant issues.

The issues presented by this proposed development are unusually complex, due to the relatively large scale of the project, limits on urban services in the Half Moon Bay area, the complexity of Half Moon Bay's LCP, and the fact that the rapidly urbanizing San Mateo County mid-coast area falls partly under Half Moon Bay's jurisdiction and partly under the County of San Mateo's jurisdiction. Such circumstances are hardly unique, of course, within California's coastal zone. However, within the past year or two, the pace of development, both actual and proposed, has been particularly rapid on the San Mateo County coast, including within the City of Half Moon Bay. A very strong real estate market in the San Francisco Bay Area as a whole and San Mateo County in particular, coupled with the recent expansion of the Sewer Authority Mid Coastside sewage treatment plant, which serves the urbanized portions of the San Mateo County coast, and the availability of additional water supplies have contributed to making the subject area one of intense development pressure.

Within the past year, for instance, the following projects have been appealed to the Commission from the San Mateo County area, raising (among others) potential issues of urban service capacity, protection of environmentally sensitive habitat areas and visual resources, and provision of adequate public access to the shoreline:

- #A-1-99-20, Coastside County Water District (Half Moon Bay): replacement of 2,200 feet of a 10-inch-diameter water supply main line with a 16-inch diameter line; Commission found substantial issue on June 7, 1999; final action pending.

- #A-2-99-63, Coastside County Water District (San Mateo County): replacement of an additional segment of the above-mentioned water line within San Mateo County's jurisdiction; Commission found substantial issue on February 18, 2000; final action pending.
- #A-1-99-51, Wavecrest Village (Half Moon Bay); mixed-use project consisting of 225 market rate and 46 affordable apartments on 75.8 acres, commercial uses on 16.8 acres, community facilities such as ball fields and community gardens, a new middle school for the Cabrillo Unified School District, and a Boys and Girls Club; Commission found substantial issue on November 5, 1999; final action pending.
- #A-2-99-066, Field and Lee (San Mateo County): 6,500-square foot single-family residence near Año Nuevo State Reserve; Commission action postponed by applicant; final action pending.

Of course, projects and issues from other parts of the North Central Coast District continue to come before the Commission, including the revision of Sonoma County's Local Coastal Program that was submitted in August 1999 and other Local Coastal Program submittals, permit applications, and appeals from San Francisco, Marin, and Sonoma Counties. Nevertheless, the San Mateo County coast currently generates the largest share of the District office's workload.

Because of a high level of local interest in this project and because the May Commission meeting will be held in Northern California, closer to the project site than most Commission meetings, staff has scheduled a hearing on the proposed project for this meeting. Staff has prepared the following summary of the project and certain key issues that are likely to be the focus of public comment and Commission discussion.

1.3 Since the appeal was filed, the proposed project has been revised

Staff notes that since the project was initially approved by Half Moon Bay and appealed to the Commission, the applicant has made significant changes in the project. For instance, as approved by the City of Half Moon Bay, the project included 197 residential parcels. On October 28, 1999 the applicant revised the proposed plan to include 151 parcels containing 150 homes. A subsequent revision by the applicant on January 24, 2000 has brought the number of proposed homes to 145.

Aside from revisions to the project, the applicant has provided materials on a number of occasions that have clarified the nature of the proposed project. For instance, letters of April 4 and April 6 from the applicant have addressed the 88 conditions adopted by Half Moon Bay when the City approved the previous version of the project on March 16, 1999, indicating which of the conditions have been incorporated by the applicant into the project description and which ones have been superceded by subsequent alterations in the project. Revisions to the project and the clarifications provided by the applicant have assisted Commission staff in analyzing the conformity of the project with the policies of the Local Coastal Program. In some issue areas, such as the relationship of the project to environmentally sensitive habitat areas (ESHAs) on the project site, project revisions have substantially reduced or potentially eliminated conflicts between project components and LCP policies requiring protection of such resources.

On the other hand, the cumulative impact of the proposed project, in conjunction with that of other potential developments in the San Mateo County coast area, on levels of service on area

highways remains a significant issue, in spite of project revisions. A very limited number of area highways are shared by visitors to the coast and coastal residents, including the future residents of this proposed subdivision, and the ability of area highways to serve this and other developments contemplated by the Half Moon Bay LCP and the San Mateo County LCP remains a fundamental question.

Because the proposed project is substantially different than the one that was approved by Half Moon Bay in March 1999 and analyzed in the Commission's findings regarding Substantial Issue, dated March 17, 2000, the appellants' statements of the reasons for the appeal, the applicant's preliminary responses to the appeal, and certain correspondence may address project elements that have been substantially changed or are no longer part of the revised proposed project. All of this correspondence is part of the project record, and much of it was attached as exhibits to the findings of substantial issue. For the sake of brevity, clarity, and to avoid waste, most of this superseded material is not again reproduced in this report. Instead, a package containing select items of correspondence is being provided in a separate package along with this report. However, staff has carefully reviewed that material to assure that the issues and concerns that apply to the proposed project, as revised, are addressed in this staff report.

2.0 PROJECT LOCATION AND DESCRIPTION

The entire City of Half Moon Bay is within the California coastal zone. The City has a certified Local Coastal Program, which allows the City to issue Local Coastal Permits. The project contains many areas of wetlands and streams subject to the appeal jurisdiction of the Commission under Public Resources Code (PRC) Section 30603.

The proposed project is on the Dykstra Ranch site, located on a coastal terrace east of Highway 1 and north of State Route 92 at the eastern edge of the City of Half Moon Bay, San Mateo County, approximately one mile east of the Pacific Ocean. A mix of suburban development and vacant former agricultural lands lies between the site and Highway 1. Half Moon Bay High School is located on the southwest boundary of the site.

According to the project's Initial Study, the property has elevations ranging from about 245 feet in the southeast portion of the project area down to about 45 or 50 feet in the northwest corner. The western portion of the project area contains gentle slopes in the 5 percent range. Some ridges, particularly in the northeast, drop off steeply, approaching 28 percent in some cases. The land has been used for grazing cattle and has a history of barley cultivation.

Soils on the site consist of natural deposits of alluvium and artificial fill. The alluvial soils display slight to moderate erosion potential. Soils on the rolling hills in the northwestern part of the site also pose slight to moderate erosion potential. The upland soils on the hillslopes, along the northeastern boundary of the site are moderately to highly erodable. The site contains artificial fills for an earthen dam, embankment and drainage channel berms, relating to previous agricultural activities.

The site lies in the transition area between the foothills along the western flank of the Santa Cruz Mountains and the coastal plain in Half Moon Bay. The closest active earthquake faults are located approximately five miles northeast of the site. The general area is a seismically active region, and is subject to strong seismic ground shaking.

The project as approved by the City was to subdivide the 114-acre site into 197 residential lots (since revised to 145 lots), plus open space and access roads. The 197 lots would have averaged approximately 9,500 square feet in size and were proposed to be developed with two story houses ranging in size from 2,571 square feet to 3,547 square feet. Approximately 75 percent of the homes would have backed up onto open space consisting of a small lake (the converted former pond), creeks, seasonal wetlands and slopes of the eastern foothills. Many of the homes were positioned for views of the ocean. To increase the variation in design, approximately 58 percent of the houses were proposed to have detached garages.

Infrastructure associated with project construction includes privately maintained subdivision streets, plus underground lines for water, power, and sewer services. The project as originally proposed to the City included the creation of Foothill Boulevard both on and off the site and the extension of Grand View Boulevard. However the City's approval left this development unresolved, and specified only the temporary use of Terrace Avenue for project road access. The applicant has participated in a sewer assessment district with the Mid Coastside Sewer Authority in the amount necessary to assure sewer capacity for the subdivision. Approximately 5.15 acres of the site is to be dedicated to the City for park use. A homeowners association would maintain subdivision streets, sidewalks, streetlights, monument signs, wetlands, the pond, and open space amenities such as benches, bicycle racks, a tot lot and a gazebo.

Houses are projected to be priced above $500,000, and to appeal to people purchasing their second or third home. These buyers are expected to be families with children of high school age or older.

As noted in Section 1.3 above, subsequent to the Commission's action on substantial issue, the applicant has revised the project for purposes of the de novo permit review. These revisions include reduction from 197 to 145 lots, relocation of a portion of the main "loop road" to avoid encroachment into the pond buffer area, and additional wetland and riparian corridor protections.

3.0 STANDARD OF REVIEW

Because the Commission found in March 2000 that the appeals filed regarding this project raise a substantial issue under the LCP, the Commission must consider the entire application *de novo* (PRC §§ 30603, 30621, and 30625; 14 CCR § 13115). The applicant has previously asserted that only those portions of the project that are located within 100 feet of a stream or wetland are within the Commission's physical appeal jurisdiction. However, the applicant confuses initial jurisdictional prerequisites with the Commission's authority to review the entire Pacific Ridge Development project de novo. Although Section 30603 lists the types of development for which the Commission has jurisdiction to hear an appeal, Section 30603 also indicates the parameters under which such review is to take place once jurisdiction is established. In accordance with Coastal Act Section 30603(a), the appeal is of the <u>action</u> taken by the local government approving the development. Likewise, Sections 30621 and 30625 of the Coastal Act provide that the application for the proposed development is before the Commission de novo. Therefore, consistent with Coastal Act Sections 30621 and 30625, the entire application approved by the City is before the Commission de novo.

Section 30604(b) states that after certification of a local coastal program, a coastal development permit shall be issued if the issuing agency or the Commission on appeal finds that the proposed

development is in conformity with the certified local coastal program. Pursuant to Policy 1-1 of the City's certified LUP, the City has adopted the policies of the Coastal Act (sections 30210 through 30264) as the guiding policies of the LUP. Policy 1-4 of the City's LUP states that prior to issuance of any development permit, the [Commission] shall make the finding that the development meets the standards set forth in all applicable LUP policies. Thus, the LUP incorporates the Chapter 3 policies of the Coastal Act. These policies are therefore included in the standard of review for the proposed project.

The project site is located within the Planned Development Area (PUD) designated in the City's Land Use Plan (LUP) as the Dykstra Ranch PUD. Section 9.3.7 of the LUP specifically addresses the development of the Dykstra Ranch PUD, and includes "Proposed Development Conditions" for the development. Section 18.37.020.C of the City's Zoning Code states in relevant part:

> *New development within Planned Development Areas shall be subject to development conditions as stated in the Local Coastal Program Land Use Plan for each Planned Development...*

Therefore, Proposed Development Conditions (a) through (h) contained in LUP Section 9.3.7 are included in the standard of review for this proposed project and are hereinafter referred to as LUP Policies 9.3.7(a) through 9.3.7(h).

LUP Policy 9.3.7(a) requires a specific plan to be prepared for the entire [Dykstra Ranch Planned Development] area which incorporated all of the stated conditions and conforms to all other policies of the Land Use Plan. Accordingly, the City approved a specific plan for the Dykstra Ranch PUD on January 4, 1994, and subsequently incorporated this PUD plan as Chapter 18.16 of the Zoning Code – Dykstra Ranch PUD Zoning District. In accordance with the definitions provided in Zoning Code Section 18.02.040, the LCP uses the terms "Specific Plan" and "Planned Unit Development Plan" synonymously. Zoning Code Section 18.15.045.C states that a Planned Unit Development Plan shall expire two years after its effective date unless a building permit has been issued, construction diligently pursued, and substantial funds invested. Therefore, the Dykstra Ranch PUD Plan/Specific Plan expired two years after the Commission certified it (i.e., April 10, 1998). Because the specific plan has expired, Zoning Code Chapter 18.16 <u>is not</u> included in the standard of review for the appeal. A new specific plan has not been prepared for the development.

LUP Policy 9-8 states that areas designated in the LUP as PUD shall be planned as a unit and that preparation of specific plans may be required when parcels comprising a PUD are in separate ownerships. LUP Policy 9-14 states that where portions of a PUD are in separate ownership, approval may be granted for development of a parcel or group of parcels within the PUD provided that the City has approved a specific plan for the PUD district. In accordance with these policies, if the Dykstra Ranch PUD were comprised of properties in more than one ownership, a specific plan for the entire PUD would be required as a prerequisite to the development of any portion of the district. However, the Dykstra Ranch PUD District is comprised of three parcels that are all under a single ownership, and the Pacific Ridge Development represents a development plan for the entire PUD district. Therefore, pursuant to LUP Policies 9-8 and 9-14, a specific plan is not required as a prerequisite to the development of the Dykstra Ranch PUD. Although the specific plan required to be prepared under LUP Section

9.3.7(a) has expired, the Commission could potentially find the development in conformance with the LCP, including the proposed development conditions for the PUD, without preparation of a new specific plan.

4.0 TRANSPORTATION

4.1 Regional Transportation Setting

The City of Half Moon Bay can only be accessed via Highway 1 from the north and south and by State Route 92 (SR 92) to the east (Exhibits 1, 2, and 3). Capacity increases to these roadways are constrained both legally and physically. Coastal Act Section 30254 states that it is the intent of the legislature that in rural areas, Highway 1 shall remain a scenic two-lane road. This Coastal Act policy is implemented through the San Mateo County LCP both to the north and to the south of the City, outside the City limits.

Highway 1 Corridor

Approximately 10 miles north of the City, in San Mateo County, Highway 1 passes through the "Devil's Slide" area, where landslides cause frequent interruptions and occasional closures during the rainy season. Caltrans is currently seeking necessary approvals to construct a tunnel to by-pass Devil's Slide. While the tunnel will improve operations of the highway in the section by preventing slide-related delays and closures, the width of the tunnel will only allow one lane in each direction consistent with Coastal Act Section 30254. Construction of additional lanes to provide additional capacity is therefore not an option in the Devil's Slide area. (The Coastal Commission approved San Mateo County LCP Amendment 1-96 on January 9, 1997 providing for the tunnel alternative.)

The Highway 1 right-of-way provides sufficient width for a four-lane roadway throughout the City of Half Moon Bay. South of Miramontes Point Road, Highway 1 has a rural character with one lane and a graded shoulder in each direction. It varies in width between two and four lanes between Miramontes Point Road and Kelly Avenue. North of Kelly Avenue, it includes two lanes in each direction separated by a raised median before returning to one lane in each direction north of North Main Street. The intersections of Highway 1 with North Main Street, SR 92, and Kelly Avenue are controlled with traffic signals. The intersections of Highway 1 with minor roadways are controlled with stop signs on the minor street approaches. These intersections include Seymour Street, Main Street-Higgins Purissima Road, Wavecrest Road, Bernardo Avenue, Dolores Avenue, and Redondo Beach Road.

The roadway widens at unsignalized intersections to accommodate a 12-foot left turn lane. The capacity of the corridor (LOS E)[1] is approximately 2,500 vehicles per hour. Any volume greater than 2,500 vehicles per hour would be considered an undesirable level of service F. Currently, the corridor carries approximately 3,120 vehicles during the weekday PM peak-hour and 3,000

[1] Traffic analysis is commonly undertaken using the level of service rating method. The level of service rating is a qualitative description of the operational conditions along roadways and within intersections. Level of service is reported using an A through F letter system to describe travel delay and congestion. Level of service (LOS) A indicates free-flowing conditions. LOS E indicates the maximum capacity condition with significant congestion and delays. An LOS F rating indicates an intersection that exceeds operational capacity with unacceptable delays and congestion.

vehicles during the Saturday midday peak-hour. Thus, the corridor operates at LOS F *(Rees 2000)*. In addition, the unsignalized Terrace Avenue/Highway 1 intersection currently operates at LOS F due to heavy traffic on Highway 1 that constrains turning movements of vehicles attempting to enter Highway 1 from Terrace Avenue *(Dowling 1998)*.

The City is currently preparing a Project Study Report for submittal to Caltrans to study an approximately $3 million improvement plan for the Highway 1 corridor north of North Main Street. The improvements contemplated include widening the remaining two-lane sections to four lanes, consolidating intersections, and improving bicycle and pedestrian safety. Under this plan, Bayview Drive might serve as the consolidated, signalized intersection at Highway 1. The other intersections north of North Main would remain unsignalized and restricted to right turning traffic. These improvements would result in operational improvements to LOS C for the corridor *(Fehr & Peers 2000)*. This project is currently in the planning stage, and the environmental review process has not yet been initiated. The City hopes to complete these improvements in 2005.

Highway 92 Corridor

SR 92 runs east of the City to Highway 280 traversing steep rugged terrain. Because of the steep slopes, slow-moving vehicles delay eastbound traffic. Currently, the SR 92 corridor carries approximately 1,976 vehicles during the weekday PM peak-hour and 1,800 vehicles during the Saturday midday peak-hour. Given the characteristics of this roadway, including its steep slopes and curves, this traffic volume results in levels of service F during the weekday peak and nearly F during the weekend peak.

In 1989, the voters of San Mateo County passed Measure A, a 1/2 cent sales tax initiative to provide funds for transportation improvements within the county.[2] Operational and safety improvements to SR 92 from Highway 1 to SR 280 were included as part of the Measure A Program. Improvements were subsequently divided into four separate construction packages. The first segment to go into construction, the section of Highway 1 from Pilarcitos Creek south of the City to Skyline Boulevard (SR 35) is scheduled for completion in the summer of 2000. The other three segments, including SR 92 improvements, are currently in the preliminary engineering and environmental documentation phase, with construction scheduled to begin in 2001.

In Phase 1, the City plans to widen the segment of SR 92 from Main Street to approximately 1,900 feet east of Main Street to four lanes. This stretch of four lanes will provide additional capacity for vehicles that is needed within the city limits to facilitate traffic movements at the signalized intersections. This is consistent with the Circulation Element of the City's LCP. This widening project, as further described below, is expected to bring the SR 92 corridor within the City limits to an acceptable level of service under the LCP (LOS C or better).

The City has recently circulated an Initial Study/Environmental Assessment for both Phases 1 and 2 of the proposed SR 92 widening project *(Caltrans 2000)*. This project includes widening from two to four lanes, intersection improvements, and improved bicycle and pedestrian safety (Exhibits 4-7). The City is the lead agency for Phase 1 of this project and will enter into a

[2] Unrelated to the City of Half Moon Bay Residential Growth Initiative also known as Measure A.

cooperative agreement with Caltrans for final design and construction for this part. In 1998, the City entered into an agreement with the San Mateo County Transportation Authority (SMCTA) for additional funding for the Phase 1 portion of the project. Funding for Phase 1 includes $3.97 million from the State, $4.92 million from SCMTA and $0.82 million from the City. The City expects to complete Phase 1 by 2002

Phase 1 starts at Highway 1 and continues east along SR 92 to approximately 2,230 feet east of Main Street. The Phase 1 improvements include (see Exhibits 4-7):

- Shift median island easterly on Highway 1 to provide an additional left turn lane from southbound Highway 1 to eastbound SR 92, traffic signal modifications;
- Widen SR 92 from Highway 1 to Main Street to provide two through lanes and a right turn only lane in the easterly direction and a left turn pocket at the SR 92/Main Street intersection;
- Widen SR 92 from Highway 1 to Main Street to provide two through lanes in the westerly direction with added right and left turn lanes at the SR 92/Highway 1 intersection;
- Construct a raised landscaped median and new curb and sidewalk on both sides of SR 92;
- Introduce new street trees and decorative lighting along SR 92, between Highway 1 and Main Street;
- Improve SR 92/Main Street intersection by replacing the pavement, traffic signal modifications, new curb and sidewalks;
- Modify the existing drainage system between Highway 1 and Main Street as needed;
- Widen SR 92 from Main Street to approximately 2,230 feet east of Main Street to provide two lanes in each direction, a raised landscaped median with opening for left turns into Hilltop Mobile Home Park, a right turn only lane from westbound SR 92 to northbound North Main Street, with bike lanes, curbs, sidewalks, decorative lighting, and street trees;
- Widen Main Street on the east side from SR 92 south to Stone Pine Road to provide a right turn only lane, with new curb, sidewalk and decorative lighting;
- Widen North Main Street between SR 92 and Highway 1 approximately 3 feet on each side to provide a bike lane in each direction, replace existing pavement, with new curb, sidewalk, decorative lighting and street trees;
- Construct a retaining wall at the southeast comer of Highway 1/SR 92 intersection and construct a retaining wall approximately 580 m (1,900 feet) east of Main Street, on the north side of SR 92; and
- Relocate existing overhead utilities underground where practical.

Phase 2 follows SR 92 from approximately 2,230 feet east of Main Street to the city limit line and will be constructed by the SCMTA. Phase 2 will include widening SR 92 from approximately 2,230 feet east of Main Street to the city limit line to provide one standard 12-foot lane and an 8-foot outside shoulder in each direction.

To the east of the City within the County portion of the SR 92 corridor, an uphill passing lane is currently under construction to improve flow. In addition, the SCMTA is preparing plans for a

widening and curve correction project from Pilarcitos Creek to the proposed Foothill Boulevard. This project will include widening of existing lanes and curve corrections to improve safety, but terrain and proximity to stream corridors prohibit widening the roadway to provide additional lanes east of the City limits. Thus, while the proposed lane widening and curve corrections will improve the flow of traffic through this corridor, it is not feasible to increase capacity by adding lanes to this section of SR 92.

4.2 LCP Standards

The City of Half Moon Bay LCP contains policies requiring adequate road capacity to serve new development and impacts of development to traffic on Highways 1 and 92. LUP Policy 9-2 specifies that development shall not be permitted unless it is found that the development will be served upon completion with road facilities. LUP Policy 9-4 states that (1) all new development shall be accessed from a public street or have access over private streets to a public street, (2) development shall be served with adequate services and that lack of adequate services shall be grounds for denial of a development permit or reduction in the density otherwise allowed under the LUP, and (3) that the applicant shall assume full responsibility for the costs for service extensions or such share as shall be provided through an improvement or assessment district for required service extensions. LUP Policy 10-31 requires developers of property along the Foothill Boulevard alignment to participate in an assessment district to provide funding necessary to construct this roadway and provides design criteria for this roadway.

Section 9.3.7 of the LUP includes Proposed Development Conditions for the development of the Dykstra Ranch Planned Unit Development Area (the project site). Proposed Development Condition 9.3.7(a) provides for the reduction of the maximum allowable density of 228 units for the project site if the remaining capacity on SR 92 is inadequate to accommodate that level of development. Condition 9.3.7(f) requires construction of the portion of Foothill Boulevard located within the PUD area as a part of the development. LUP Policy 10-25 designates LOS C as the desired level of service on Highways 1 and 92 except during the weekday and weekend peak-hours when LOS E may be accepted. In addition, pursuant to LUP Policy 1-1, the City has adopted the policies of the Chapter 3 policies of the Coastal Act as the guiding policies of the LUP. Accordingly, the City's LUP adopts Coastal Act Sections 30250 and 30252, which also require that development only be approved in areas with adequate public services.

4.3 Traffic and Circulation Impacts

The roadway connections, both existing and proposed, to the project site are shown on Exhibit 2 and 3. Regional highway connections to Half Moon Bay are shown on Exhibit 1 and 4. The project site is located approximately 3,300 feet north of SR 92 and approximately 2,000 feet inland of Highway 1, and is separated from these highways by both developed and undeveloped areas. Terrace Avenue, which currently serves the Grandview Terrace neighborhood with a connection to Highway 1 to the west, is the only existing road connection to the project site. The LUP Map shows proposed future access to the site via Foothill Boulevard, which would run north from SR 92 linking with the project site and with existing roadways.

The applicant proposes to provide both construction and post-construction access to the site via extension of Terrace Avenue, connecting the project site to Highway 1 to the west. The project was initially designed with the primary site access via Foothill Boulevard. The LCP encourages

the development of Foothill Boulevard, as an alternative throughway for local traffic parallel to Highway 1. However, the environmental review process undertaken for the City's approval revealed that the proposed alignment of Foothill Boulevard would encroach into wetlands. The City of Half Moon Bay LCP prohibits construction of roads within 100 feet of a wetland. Subsequently, the applicant modified the project to only include the portion of Foothill Boulevard located within the boundaries of the project site. The project will not therefore complete the link of Foothill to SR 92 as shown on the LUP map. It is unresolved whether an alternative alignment for Foothill Boulevard exists that would avoid wetlands.

The applicant proposes to use Bayview Drive if constructed as a preferred access to the development from Highway 1. Bayview Drive would connect the Pacific Ridge site to Highway 1 to the north of Terrace Avenue through the Beachwood property. However, the City recently denied a coastal development permit application for development of the Beachwood Subdivision located between the project site and Highway 1. The Beachwood project included the construction of Bayview Drive. The owners of the Beachwood property have no incentive to pursue construction of Bayview Drive in the absence of an approval for the subdivision. It is unknown whether the City would pursue construction of Bayview by exercising eminent domain.

Construction Impacts

Construction-related traffic has the potential to adversely affect local traffic circulation on Terrace Avenue and at the intersection of Terrace and Highway 1. Construction traffic will generate an average of 46-50 trips per day over an approximately 300-day construction period through the unsignalized Terrace Avenue/Highway 1 intersection *(Rees 2000)*.[3] This construction traffic represents a 1.6-percent increase over the current peak-hour traffic within the Highway 1 corridor north of North Main Street.

Post-Construction Impacts

Assessment of the post-construction traffic impacts of the proposed development is based on estimated vehicle trip rates for a 150-unit development. The development will generate 152 new trips during the PM peak-hour and 142 new trips during the Saturday noon peak-hour (*Fehr & Peers 2000)*. These new trips represent an approximately 4.7-percent increase of traffic within the Highway 1 corridor north of North Main Street.

4.4 Mitigation Proposed by the Applicant

The unsignalized Terrace Avenue/Highway 1 intersection currently operates at LOS F. Construction traffic impacts will be mitigated, as further described below, by avoiding peak-hour periods and by providing traffic controls when necessary. The applicant proposes to mitigate post-construction traffic impacts at the Terrace Avenue intersection through the installation of a traffic signal and by widening the remaining two-lane section of Highway 1 between North Main Street and 400 feet north of Terrace Avenue to four lanes prior to occupancy of the residences. These measures will improve the operation of the intersection from the current LOS F to LOS A, and of this section of the Highway 1 corridor from LOS F to LOS C *(Rees 2000)*. Thus, as

[3] Vehicle trip rates for the project traffic analysis are based on the Institute of Transportation Engineers publication *Trip Generation 5th Edition*. This publication is accepted by the City of Half Moon Bay and most municipalities in the U.S. for calculating vehicle trip generation.

proposed, the project will avoid short-term construction impacts to the operation of the Terrace Avenue intersection, will improve the long-term operation of the intersection, and will contribute toward the needed improvements for the Highway 1 corridor within the City.

The applicant proposes to minimize the impacts of construction traffic to local traffic circulation through the following measures:

- Construction equipment and worker vehicles will be staged and parked on the project site.
- The applicant will notify the City 24 hours in advance if more than 25 worker vehicles are to exit the site during the PM peak-hour, and reimburse the City for the cost of any resulting traffic controls at the intersection of Terrace Avenue and Highway 1.
- The applicant will maintain Terrace Avenue free of dirt and debris throughout project construction.
- Heavy construction vehicles will access the site during non-peak hours.
- The applicant will install speed bumps on Terrace Avenue.

The applicants propose to mitigate the post-construction traffic impacts by providing the following improvements prior to occupancy of the proposed residences:

- installation of a traffic light at the Terrace Avenue/Highway 1 intersection,
- widening the remaining 2-lane section of Highway 1 to four lanes between North Main Street to 400 feet north of Terrace with a southbound left turn lane from the highway onto Terrace, and
- upon completion of alternative site access via Bayview and/or Foothill, the removal of the traffic signal at Terrace Avenue and conversion of Terrace to an emergency vehicle only access with knockdown barriers at the entrance to the project site.

These improvements have not been authorized but represent about one third of the City's $3 million Highway 1 improvement plan for the corridor north of North Main Street described in Section 4.1 above.

The following issues are of particular concern in the Commission's review of this project:

1. approvability of a proposed subdivision where the existing level of service on either Highway 1 or SR 92 within the City during the weekday and weekend peak-hours is LOS F,
2. and approvability of a proposed subdivision where the mitigation for traffic impacts would provide only a some, but not all, of the improvements needed to bring the operation of these highway corridors to the levels of service required by the LCP.

5.0 ENVIRONMENTALLY SENSITIVE HABITAT AREAS

5.1 LCP Standards

Chapter 3 of the City of Half Moon Bay LCP includes standards to minimize the impacts of development to environmentally sensitive habitat areas (ESHA) including wetlands, riparian corridors, and areas that support rare, endangered and unique plant and animal species. The applicable policies include LUP Policies 3-1, 3-3, 3-4, 3-5, 3-9, 3-11, 3-12, LUP Appendix A,

and LCP Zoning Code Sections 18.02.040, 18.38.020, 18.38.035, 18.38.055, 18.38.075 and 18.38.080. These LCP standards define sensitive habitats and their buffer areas, the uses that are permitted within or near these areas, the analysis that must be undertaken to identify them, and the development standards that must be applied to protect them. In addition, pursuant to Policy 1-1 of the City's certified LUP, the City has adopted the policies (Sections 30210 through 30264) as the guiding policies of the LUP. Accordingly, the City's LUP adopts Coastal Act Sections 30233 and 30240, which limit development within and adjacent to ESHAs, including wetlands.

5.2 Wetlands

In its action on the substantial issue portion of this appeal in March 2000, the Commission found that a substantial issue existed regarding whether the project plans approved by the City included all of the wetland areas on the site. Subsequent to the City's approval, the applicant has submitted a series of reports and memoranda culminating in a revised wetlands delineation dated November 4, 1999 (Exhibit 8). The revised wetlands delineation shows eight vegetated wet areas, three ephemeral and two intermittent streams and a pond. The Commission's staff biologist has determined that the revised delineation accurately depicts the wetland areas on the site in accordance with the LCP. Staff notes that the provisions regarding wetlands contained in the certified LCP, including Section 30233 of the Coastal Act, which the City adopted in its certified LCP, require the protection of all areas within the project site where the water table is near the land surface long enough to support the growth of hydrophytes or to support the formation of hydric soils.

Numerous gullies are located in the area. The site's vegetation has been affected by historic cultivation. Mature eucalyptus and cypress trees exist on portions of the site. The pond and streams contain willows, cypress and other plants associated with wetlands. The 1.6-acre pond shown in the revised wetlands delineation was created in the 1950s as a stock pond. This was accomplished through construction of a 23-foot-high earthen dam on the west side of the pond and diversion of a stream (Stream 3). Stream 4 also drains into the pond and surrounding wetlands. The pond outflows into Stream 5, which eventually leads to Pilarcitos Creek. The pond and a 100-foot buffer around it are shown on the project plans. Although the project plans include a 100-foot buffer around the pond, the applicant asserts that no buffer is required under the LCP because it is a man-made pond used for agricultural purposes *(Cassidy 10/28/99)*. While disagreeing with the staff's position with respect to required buffers for the pond and Wetlands A, E, and G, the applicant has amended the permit application de novo to include a 100-foot buffer around each of these areas.

LUP Policy 3-11(c) states:

> *Along lakes, ponds, and other wet areas, extend buffer zones 100 feet from the high water point, except for man-made ponds and reservoirs <u>used for agricultural purposes</u> for which no buffer zone is designated.* [Emphasis added]

This policy is implemented by Zoning Code Section 18.38.080.D, which defines "Wetlands Buffer Zone" as:

> *The minimum buffer surrounding lakes, ponds, and marshes shall be 100 feet, measured from the high water point, except that no buffer is required for man-made ponds and reservoirs <u>used for agriculture</u>.* [Emphasis added]

The applicant states that the pond will be used for agricultural purposes because water from the pond is proposed to be used to irrigate a community garden.

Chapter 8 of the LUP incorporates the definition of "Agricultural Use" contained in Government Code Section 51201(b) which states:

> *"Agricultural use" means use of land for the purpose of producing an agricultural commodity for commercial purposes.*

The proposed community garden is not a use of land for the purpose of producing an agricultural commodity for commercial purposes and is not therefore an agricultural use under the LCP. Although the pond was originally created for agricultural purposes, the proposed development will not continue this or any other agricultural use on the site. Consequently, a 100-foot buffer is required around the pond in accordance with LUP Policy 3-11(c) and Zoning Code Section 18.38.080.D.

The applicants also contend that Wetlands A, E and G are exempt from the Commission's review authority under §13577(b)(2) of the Commission's regulation. Section 13577(b)(2) provides that wetlands subject to the Commission's appeal jurisdiction do not include:

> *"... wetland habitat created by the presence of and associated with agricultural ponds and reservoirs where the pond or reservoir was in fact constructed by a farmer or rancher for agricultural purposes; and there is no evidence [...] showing that wetland habitat predated the existence of the pond or reservoir. Areas with drained hydric soils that are no longer capable of supporting hydrophytes shall not be considered wetlands."* [Emphasis added]

In support of their contention, the applicants assert that Wetlands A, E and G are exempt because they were created to supply water to the pond and reservoir (Wetland E) or as a result of runoff and seepage from the pond and reservoir (Wetlands A and G). However, as discussed above, the record documents that the pond will no longer be used for agricultural purposes. Since the site no longer contains an agricultural pond, the other wetlands are no longer associated with or created by an agricultural pond. It is staff's position that the exemption provided in Section 13577(b)(2) does not apply to wetlands that currently exist independent of and disassociated from preexisting agricultural activities. The staff also notes that if the wetlands were filled, they would support residential, not agricultural activities. It is also staff's position that the exemption in § 13577(b)(2) is inapplicable to the proposed fill of wetlands for other than agricultural purposes.

While stating that he reserves the right to amend the project with respect to protection of the pond, the applicant reduced the number of proposed lots and reconfigured the subdivision plan to conform with the wetland buffer policies of the LCP. As modified, no portion of any lot line is proposed within 100 feet of the delineated wetlands, including the pond.

The project plans also provide for the construction of a public trail within the 100-foot buffer zone surrounding the pond and wetlands C, D, and E (Exhibit 9). While the LCP allows trails within wetland buffer areas, LUP Policy 3-3(b) specifies that development adjacent to sensitive habitats shall be sited and designed to prevent impacts that could significantly degrade the habitat. The placement of a trail within the wetland buffer increases the likelihood that the habitat may be disturbed by dogs entering the wetlands. The presence of dogs could be particularly harmful in the pond area where they would likely harass birds and small mammals

using this habitat. The applicant proposes to minimize this potential impact by constructing a 3-foot-high chain link fence between the pathway and the wetland areas, and by planting native coastal scrub species along the fence line. These measures are appropriate to ensure that the proposed trail will be sited and designed in a manner that will not significantly degrade the adjacent sensitive habitat.

In addition to the fencing, the applicant proposes other measures designed to protect and enhance the wetland areas on the site, including:

- installation of a slotted weir at the outlet of the pond to assure that a minimum water level is maintained in the pond,
- planting of coastal scrub species and willows in the upland areas surrounding the pond,
- bullfrog eradication (as further discussed in Section 5.4 below),
- implementation of the storm water and water quality management measures,
- modifications to Stream 3 to divert more water into Wetland E and the pond, and
- installation of temporary construction fencing to prevent construction equipment from unintentionally entering wetland and wetland buffer areas.

The applicant proposes to prepare a Final Habitat Enhancement and Management Plan that will provide for monitoring to determine the success of the proposed habitat enhancement measures and for the long-term management and preservation of these habitat areas. To ensure that the development will conform to the wetland protection policies of the LCP, any approval must require the applicant to submit the Final Habitat Enhancement and Management Plan to the executive director for review and approval in consultation with the U.S. Fish and Wildlife Service and the California Department of Fish and Game prior to issuance of a coastal development permit.

The project as proposed also includes installation of an overflow storm drain intake in the southwest corner of the pond. This drain would also provide for periodic draining of the pond as necessary for bullfrog eradication as discussed in Section 5.4 below.

5.3 Riparian Corridors

The property contains five steams, two are ephemeral, or seasonal, and three are intermittent or storm water drainages. These streams are indicated on Exhibit 9 as Streams 1-5. The proposed development plan shows the location of these five riparian corridors and the development setbacks required under the LCP. Specifically, Zoning Code Section 18.38.075.D sets the riparian buffer zone for intermittent streams as 30 feet outward from the limit of riparian vegetation or 30 feet from the midpoint of intermittent streams where no riparian vegetation exists. Some portions of these stream corridors are beneath a eucalyptus canopy. Consequently, these areas are without riparian vegetation and the setback is defined as 30 feet from the midpoint of the stream. In the areas that are not covered by eucalyptus, willows and other riparian vegetation are established. In these areas, the riparian buffer is shown as 30 feet from the limit of the riparian vegetation. The applicant's biologist identified a sixth stream in the area of the eucalyptus grove that feeds into Wetland B along the northern boundary of the site *(Foreman*

1999). However, this riparian area (Stream 6) and the corresponding development setback are not shown on the project plans.

In conformance with the LCP policies concerning protection of riparian areas, no lots are proposed within any of the streams or buffers shown on the revised wetland delineation. A total of seven road crossings are proposed via arched culverts with one culvert across Streams 1, 2, 4, and 5 and three across Stream 3. These crossings are shown on Exhibit 9 as Bridges 1-7. Such bridges are permitted within riparian corridors in accordance with Zoning Code Section 18.38.075.B.1 only if no feasible or practical alternative exists and when bridge supports are not in significant conflict with corridor resources.

As discussed in Section 4.0 above, the applicant is required under the LCP to construct the portion of Foothill Boulevard located within the project site. Beginning at the southern boundary of the site and running north to Grandview, this section of Foothill Boulevard crosses Streams 1, 2, and 3. Because Streams 1, 2, and 3 run perpendicular through the alignment of Foothill Boulevard as designated on the LUP Access and Circulation Map, it is not feasible to construct Foothill Boulevard without crossing these streams. In addition, the proposed bridges would span the streams with no supports located within the riparian corridor. Therefore, there are no feasible alternatives to proposed Bridges 1 and 2 and these stream crossings are not in significant conflict with corridor resources. However, because Foothill Boulevard will not extend south of the site to State Route 92 at this time, the applicant does not propose to construct the section of Foothill that would cross Stream 1 (shown as Bridge 8 on Exhibit 9). It is not known if and when Bridge 8 will be constructed.

Bridges 3, 4, and 5 allow the main internal roadway system for the development to form a complete loop. However, it would be feasible to eliminate one of these bridges and still provide access to all of the proposed lots. If, for example, Bridge 4 were eliminated, the lots on either side of Stream 4 could still be reached. However, the applicant has asserted that the City of Half Moon Bay Fire Code prohibits dead end roads of this length. Staff has not found a specific provision of the Fire Code supporting this assertion. Thus, it is unclear at this time whether there are feasible or practical alternatives to Bridges 3, 4, or 5. Since bridges 3, 4, and 5 would span the streams with no supports located within the riparian corridors, they would not be in significant conflict with corridor resources.

Bridge 6 would create a third crossing of Stream 3. The applicant has not demonstrated that there is no feasible or practical alternative to this stream crossing. Because the length of the roads on either side of Bridge 6 are much shorter than the main loop road discussed above, it appears that Bridge 6 could be eliminated without any other modifications to the internal road system consistent with the fire code and the proposed plot plan. Therefore, staff's preliminary analysis indicates that the LCP requires Bridge 6 to be eliminated from the development.

As proposed, Bridge 7 is required to provide access to four lots, number 4-7, at the southern boundary of the development, as the only proposed crossing of Stream 1 at this time. Lots 4 and 5 both front Foothill and could potentially be accessed via this route as an alternative to Bridge 7. However, in accordance with LUP Policy 9.3.7(f), no curb cuts are permitted for driveway access to Foothill Boulevard. Therefore, Bridge 7 is the only feasible or practical alternative to provide access to lots 4-7.

Stream 3 was diverted in the 1950s to create the pond. Currently, this stream flows partially into Wetland E and the pond with the remaining flow draining into a major storm drain system to the west of the development site on the Beachwood property. The applicant proposes to construct a channel to divert most of the normal flow of Stream 3 into Wetland E and the pond with only high water flows continuing west into the storm drain system. Directing the primary flow of Stream 3 into the wetland area will help maintain the water level in the pond necessary to support San Francisco garter snakes and California red legged-frogs as further discussed in Section 5.4 below. The proposed diversion may therefore be characterized as a fish and wildlife management activity. Zoning Code Section 18.38.075.B.1. allows such activities to be undertaken in riparian corridors.

The applicant also proposes to install a drain in the southwest corner of the pond directing water from the pond during high-flow conditions into the storm drain system. By diverting water from Stream 3 into the pond and then diverting high flows from the pond into the storm drain, the proposed development may allow even high flows to by-pass the portion of Stream 3 below the diversion. To protect against this potential de-watering of Stream 3, staff analysis indicates that the high-water drain proposed to be installed in the pond should direct water from the pond into the original bed of Stream 3 immediately downstream of the proposed diversion.

As noted above, the Stream 6 along the northern boundary of the site and appropriate setbacks are not indicated on the project plans. Thus, the staff cannot conclude that the proposed lot lines adjacent to this riparian corridor will not encroach into either the stream or buffer area. Because this drainage is located within a eucalyptus grove and is therefore without riparian vegetation, the required development setback is 30 feet from the midpoint of the stream. Staff analysis indicates that this issue might be addressed by requiring the applicant to prepare a Revised Vesting Tentative Tract Map depicting all of the riparian corridors and buffers, including Drainage 6.

Zoning Ordinance 18.28.035(B)(1) requires coastal development permit applicants to map all sensitive coastal resource areas within 200 feet of the project site. This information is necessary to determine if a proposed development may affect offsite sensitive resources. The Pacific Ridge Development plans do not map the extension of Stream 3 to the west of the site. As a result, the Commission cannot determine whether the proposed extension of Terrace Avenue may encroach within this riparian corridor or its buffer. Because this portion of Stream 3 is within the eucalyptus canopy and is therefore without riparian vegetation, the required setback for the road extension under the LCP is 30 feet from the center of the corridor. Thus, in accordance with the LCP, the proposed Terrace Avenue extension may not be constructed within 30 feet of the centerline of any portion, on or offsite, of the Stream 3 riparian corridor.

5.4 Threatened and Endangered Species

The U.S. Fish and Wildlife Service has determined through a formal consultation to the U.S. Army Corps of Engineers that the pond and surrounding area are provide important habitat area for the threatened California red legged-frog and the endangered San Francisco garter snake *(White 1998)*. The consultation includes a recommendation that no development occur be permitted within 150 feet of the pond – 50 feet greater than the buffer proposed by the applicant. It appears from the project plans that portions of at least two proposed lots and of the road on the northern side of the site are located within this 150-foot buffer.

The LCP contains several policies pertinent to protection of these species and their habitat, including both general ESHA policies and specific policies for both the California red legged-frog and the San Francisco garter snake. The Commission staff has not completed its review of this issue.

6.0 CONVERSION OF AGRICULTURAL LANDS

In the past, the lower slopes and flatlands within the 114-acre Pacific Ridge site were used for pasture. Approximately 36 acres of the site (32 percent) contain Class II soils as shown on the U.S. Department of Agriculture Soils Conservation Service Soil Survey *(USDA 1961)* and are therefore classified as prime agricultural lands under the LCP (Exhibit 10). The proposed project would commit these prime agricultural lands to urban use.

6.1 LCP Standards

The LCP incorporates Coastal Act Sections 30241 and 30242, which provide that the maximum amount of prime agricultural land shall be maintained in agricultural production and that conversion to nonagricultural uses of other non-prime lands shall be limited. Conformance with these policies is to be accomplished through, among other means, the establishment of stable urban/rural boundaries and by limiting conversion of agricultural lands where the viability of agricultural uses is severely limited by conflicts with urban uses.

The LUP adopts the Coastal Act definition of prime agricultural lands, which incorporates by reference Government Code Section 51201. This definition includes all land which qualifies for rating as Class I or Class II in the Soils Conservation Service land use capability classifications.

LUP Policy 8-12 sets the urban/rural boundary for the region as the Half Moon Bay City Limit.

Coastal Act Section 30250(a), also incorporated into the LCP, requires that new development shall be located within, contiguous with, or in close proximity to existing developed areas.

6.2 Discussion

Chapter 8 of the LUP provides for the urbanization of former agricultural lands where farming is no longer economically viable. The land use designations and agricultural policies of the LUP establish a system for phasing the conversion of agricultural lands to urban use. The criteria used to form this phasing plan include, availability of necessary infrastructure, proximity to existing developed areas, and parcel size. Lands clearly no longer suitable for agriculture are designated for development first. Lands that are expected in the short term to be suitable for agricultural use are designated as Urban Reserve. These lands are to be developed only after substantial build-out of the lands designated for development. The LUP designates lands capable of continuing to support viable agricultural uses (at the time that the LUP was certified in 1985) as Open Space Reserve. Open Space Reserve lands may be developed under the LUP only after all other remaining lands in the City suitable for development have been developed or committed to other uses. Chapter 9 of the LUP further provides that new development shall be located within, contiguous with, or in close proximity to existing developed areas to (1) avoid urban sprawl, (2) prevent premature commitment of rural lands to development, and (3) preserve the maximum amount of land in urban areas suitable for agricultural use.

All undeveloped lands designated in the LUP as potentially suitable for new residential development are classified into six categories in accordance with their relationship to existing development, prior commitment to urbanization, and the coastal resource protection policies of the Coastal Act. These categories are intended to prioritize development within the City as follows:

1. Existing Neighborhoods. In-fill development of existing neighborhoods.
2. Paper Subdivisions. Undeveloped areas previously committed to urbanization by subdivision.
3. Contiguous Unsubdivided Lands Without Significant Resource Value. Unsubdivided lands generally contiguous with or surrounded by existing development without significant agricultural, habitat, or coastal recreational value.
4. Unsubdivided And Other Lands Not Contiguous With Existing Development Without Significant Resource or Recreational Value. The Wavecrest Restoration Project is the only area in the City that falls within this category.
5. Unsubdivided Lands Contiguous with Existing Development and Having Agricultural, Coastal Recreation or Habitat Value.
6. Unsubdivided Lands not Contiguous with Existing Development and Having Agricultural, Coastal Recreation, Habitat, and Scenic Value.

The LUP designates the Pacific Ridge Development site as a Category 3 area suitable for development.

The project site contains only a small amount of prime soils, is not currently in agricultural production, and is not considered a viable agricultural site under the LUP. The site is located within the urban rural boundary and is contiguous with the existing Grandview Terrace and Newport Terrace subdivisions. Agricultural use of the site is severely limited by conflicts with urban uses. For example, pesticide use would be restricted due to proximity to residential development and to the high school. For all of these reasons, the project site is designated in the LUP as an area suitable for development.

7.0 VISUAL RESOURCES

Because the project site is located at the base of hills inland of Highway 1, the development will not affect views of the coast. However, the development could significantly alter views of the hillsides. The LCP includes policies intended to protect such inland views of these scenic hillsides. Included in these policies is Zoning Code Section 18.37.020.B, which designates the hillside areas above the 160-foot contour east of the project site as a scenic area. These hillsides are included on the Visual Resources Overlay Map of the LUP. LUP Policy 9.3.7(c) states:

> *No development shall be permitted on slopes in excess of 25% or above the 160' contour and, as a condition of approval, an open space easement shall be dedicated which ensures the permanent retention of such slopes in open space. Development shall be clustered to the maximum extent feasible on lower slopes.* [Emphasis added]

As proposed, no portion of any building footprint would be located above the 160-foot contour line, but portions of the homes to be constructed on the upper lots would project above this elevation. In their appeal, the appellants contended that the LCP prohibits any portion of a

structure to project above this elevation. However, LUP Policy 9.3.7(c) specifies that no development shall be permitted on slopes above the 160-foot contour. Given the policies' limitation on development on slopes above the 160-foot contour, it appears that no portion of any structure may be constructed on slopes above the 160-foot contour. That a portion of a structure projects above this elevation does not violate the prohibition that development not be permitted on slopes above the 160-foot contour.

Staff's preliminary analysis indicates that the proposed residential structures are consistent with the 160-foot contour restriction.

However, because, the proposed project includes development, i.e., the creation of a few lots on slopes in excess of 25 percent, the project still raises issues of consistency with LUP Policy 9.3.7(c). The Commission staff has not completed its analysis of this issue.

8.0 WATER QUALITY/POLLUTED RUNOFF

The proposed development may adversely affect coastal water quality both on and off site through increased runoff from new impervious surfaces, sedimentation resulting from grading and vegetation removal, and use of herbicides, pesticides and other hazardous substance. Polluted runoff and sedimentation could significantly impact the viability of the threatened and endangered species habitat discussed in Section 5.4 above. The applicant proposes to avoid such impacts by implementing a Storm Water Pollution Prevention Plan and a Pond Water Quality Management Plan. The applicant also proposes to label all storm drain inlets, grading each lot to direct drainage to the storm drain system and not over adjacent lots or slopes, construct swales for water detention and filtration, and ensure a 0.5 percent minimum street grade along the face of the curb.

The staff has not completed its review to determine whether these proposed measures are sufficient to prevent impacts to coastal water quality.

APPENDIX A

Substantive File Documents

Caltrans 2000. "Initial Study/Environmental Assessment – State Route 92 Widening Project, Half Moon Bay, San Mateo County, California," State Clearinghouse Number 2000032103, March 22, 2000.

CCS 1998. "Supplemental Traffic Study, Foothill Boulevard Access Alternatives," CCS Planning & Engineering, December 1998.

Dowling 1998. "Highway 92 Traffic Assessment," Dowling Associates, June 22, 1998.

Fehr & Peers 2000. "Transportation Issues – Pacific Ridge Development Project," Fehr & Peers Associates, Inc., January 12, 2000.

Foreman, Steve 1999. "Letter to Bob Henry – California Coastal Commission Questions," LSA Associates, Inc., December 21, 1999.

Half Moon Bay 1998. "Final Environmental Impact Report for Dykstra Ranch," Western Ecological Services Company, Inc., December 1988.

HLA 1990. "San Francisco Garter Snake Survey and Riparian Mitigation Plan; Beachwood Subdivision, Half Moon Bay," Harding Lawson Associates, April 21, 1990.

LSA 1999. "Biological Resource Report, Pacific Ridge at Half Moon Bay, LSA Associates, Inc.," June 15, 1999.

Rees, Rob 2000. "Pacific Ridge Development – Response to Coastal Commission Questions," Fehr & Peers Associates, Inc., March 23, 2000.

RMI 1997. "Pacific Ridge at Half Moon Bay Wetland Mitigation and Monitoring Plan," Resource Management International, Inc., December 1997

San Mateo County Countywide Transportation Plan, City/County Association of Governments, San Mateo County (C/CAG), June 1997.

White 1998. "Formal Consultation on the Proposed Pacific Ridge Development Project, Half Moon Bay, San Mateo County, California (PCN 23053 S)," Wayne S. White, U.S. Department of Interior Fish and Wildlife Service November 16, 1998.

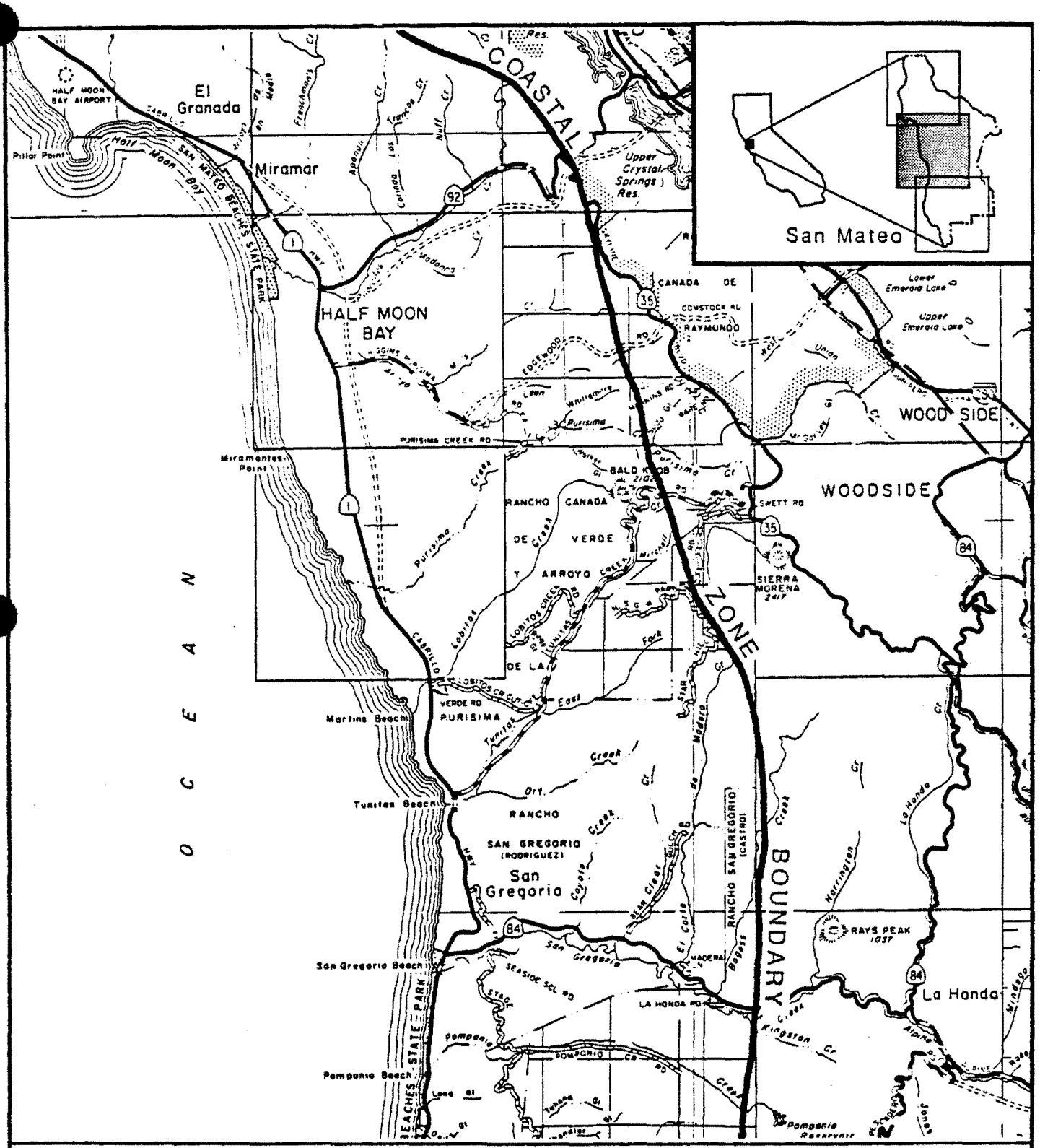

County of San Mateo

Appeal No. A-1-HMB-99-022
EXHIBIT 1

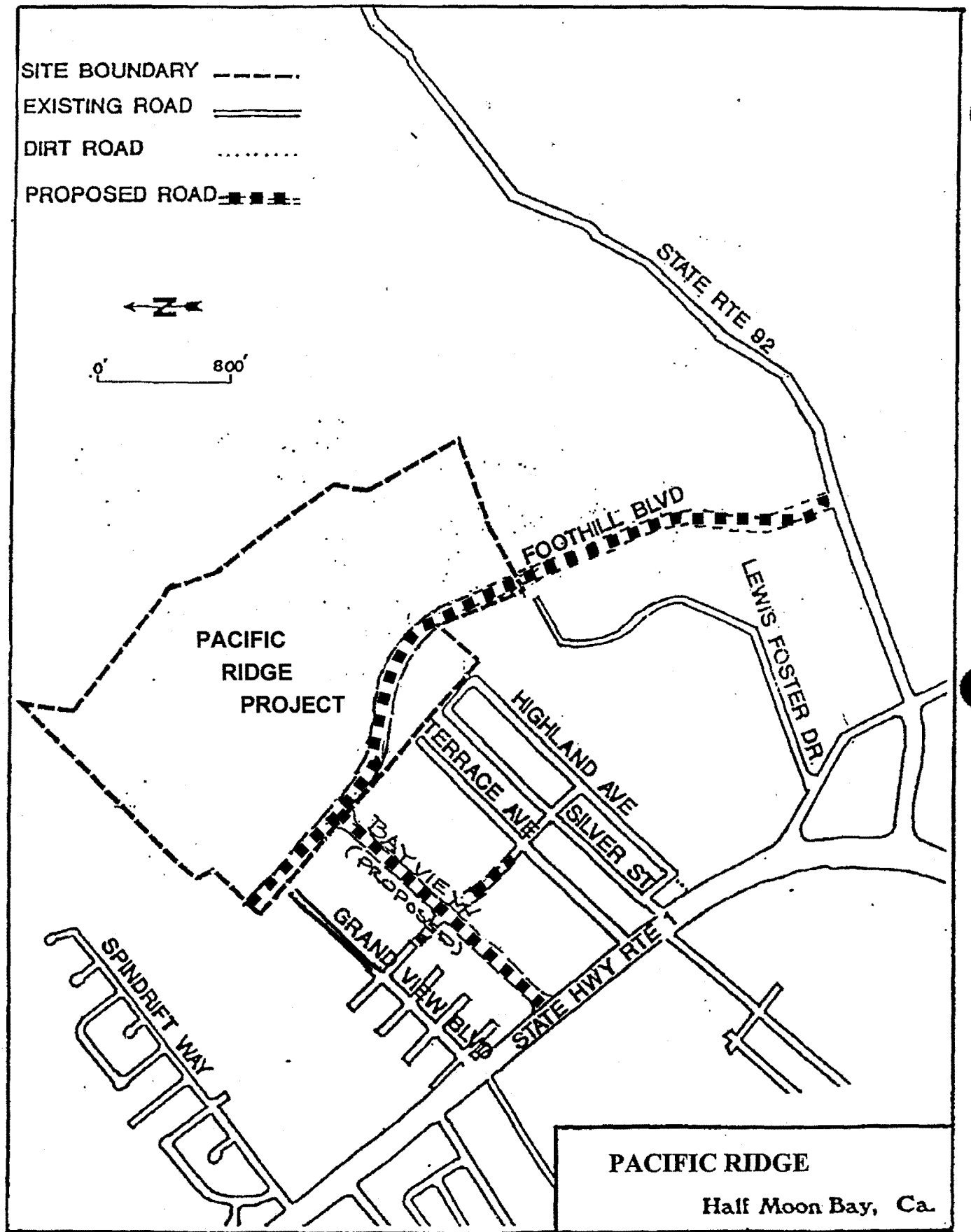

PACIFIC RIDGE

Half Moon Bay, Ca.

FOOTHILL BOULEVARD AND LOCAL STREET CONNECTIONS

WESCO

Appeal No. A-1-HMB-99-022
EXHIBIT 2

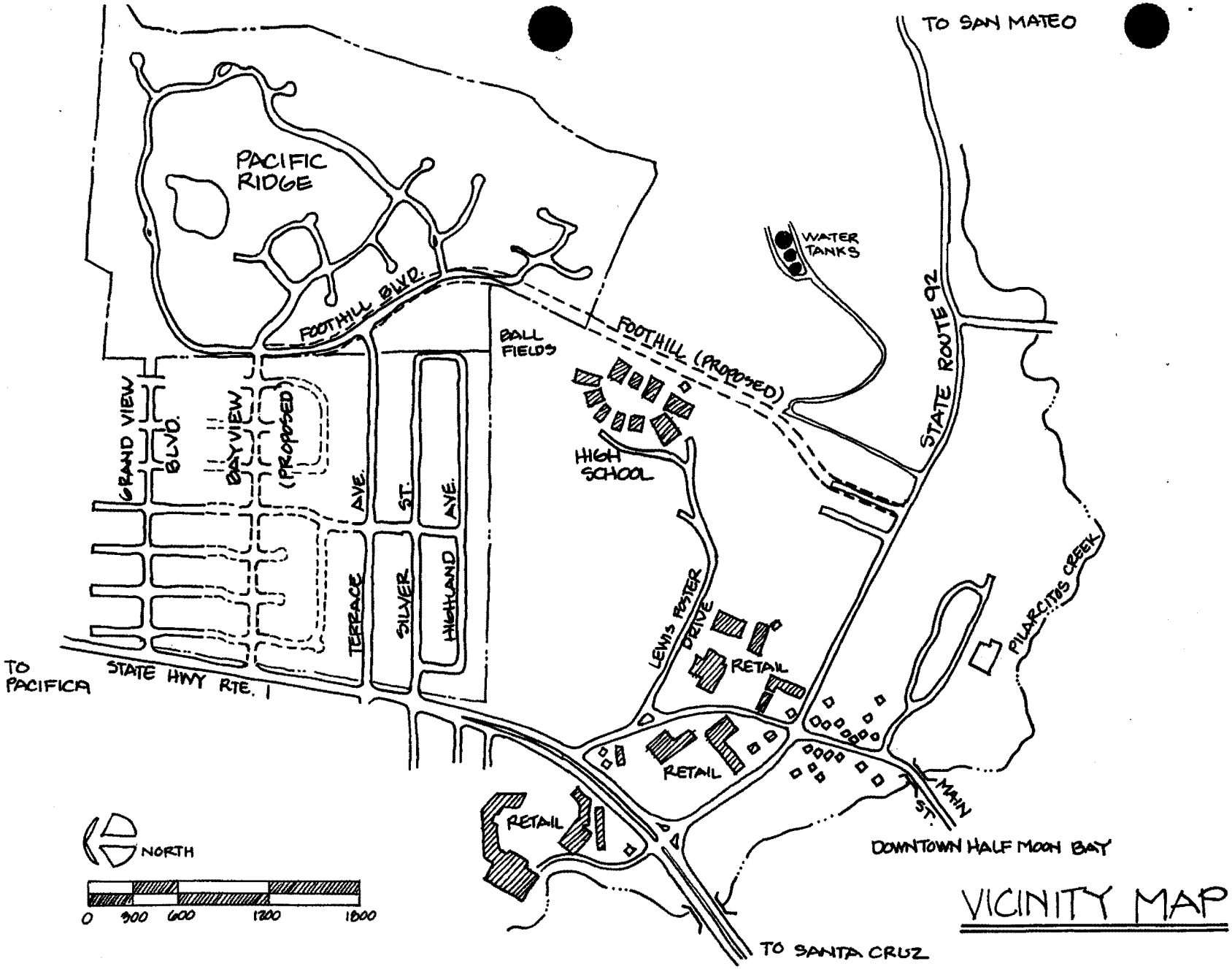

VICINITY MAP

Appeal No. A-1-HMB-99-022
EXHIBIT 3

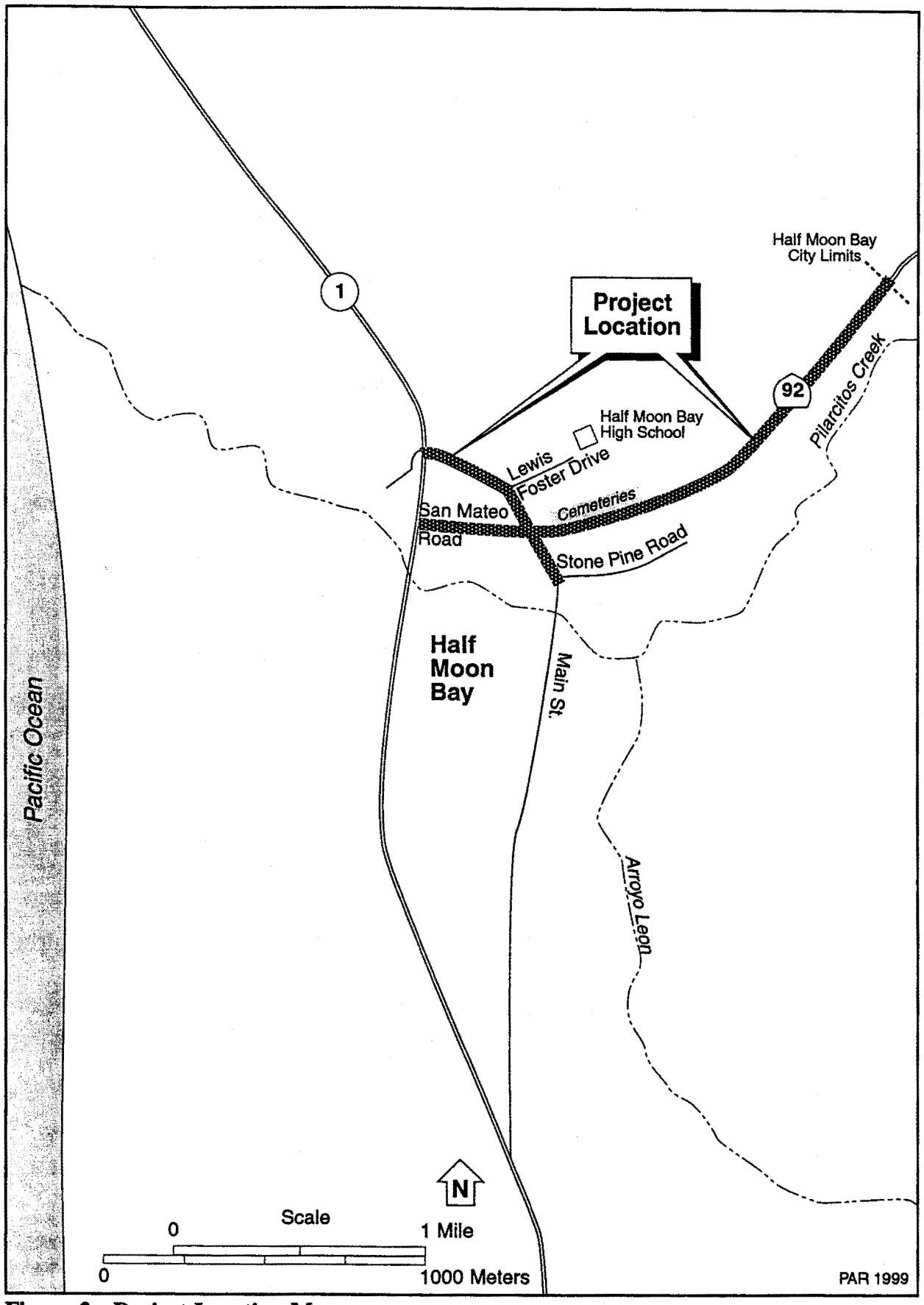

Figure 2. Project Location Map

Appeal No. A-1-HMB-99-022
EXHIBIT 4

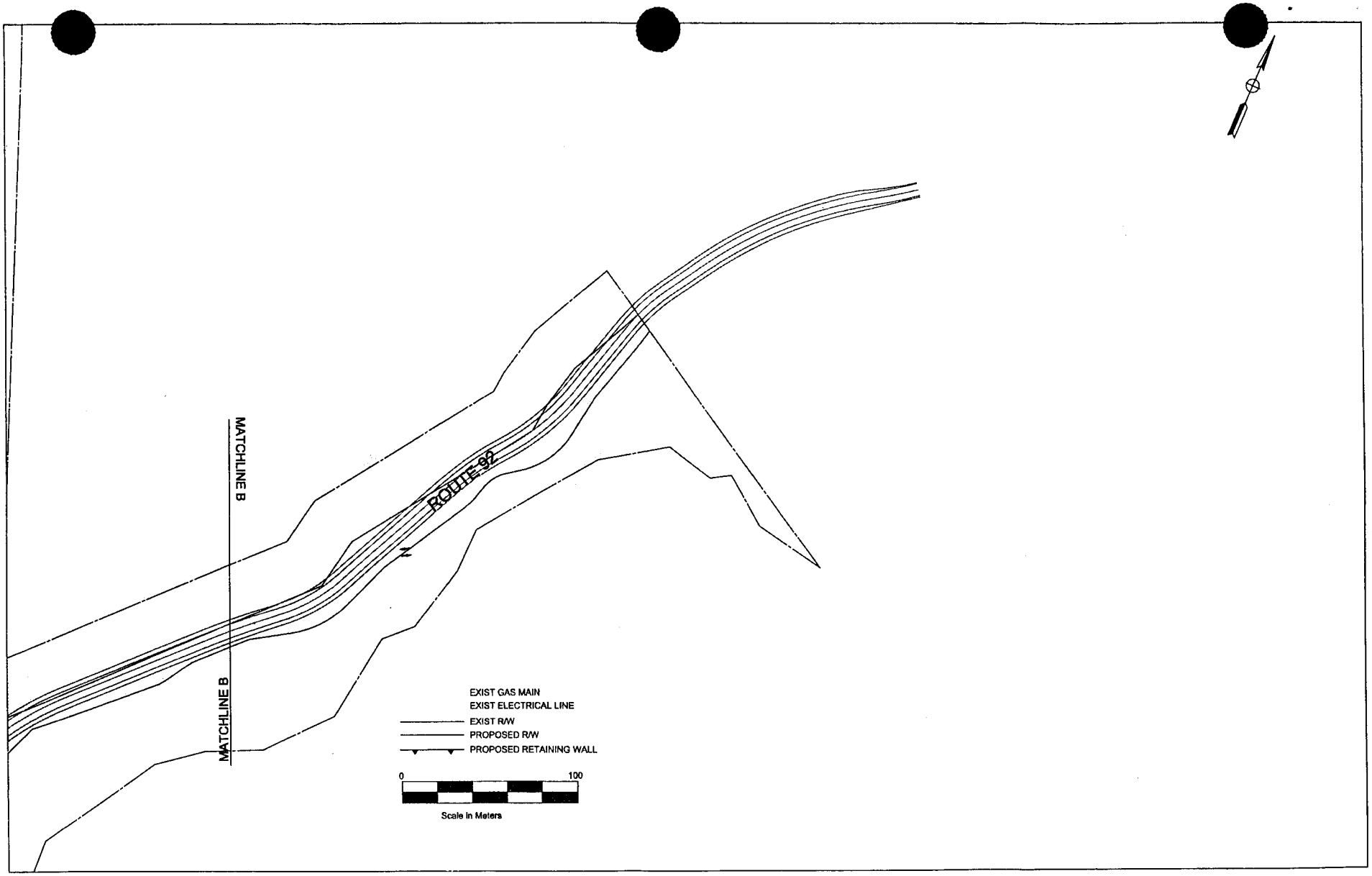

Figure 3c. Proposed Project

Appeal No. A-1-HMB-99-022
EXHIBIT 5

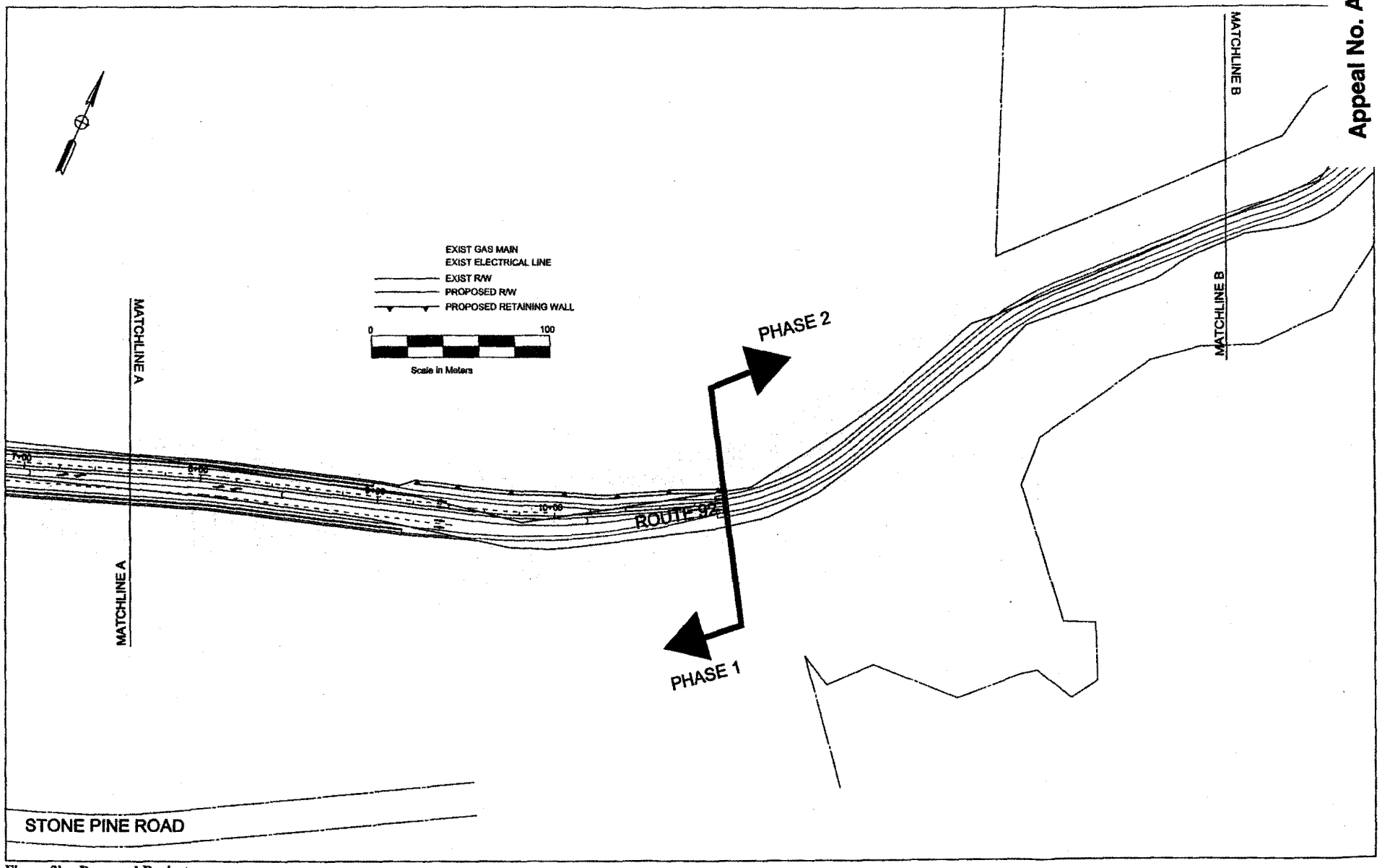

Figure 3b. Proposed Project

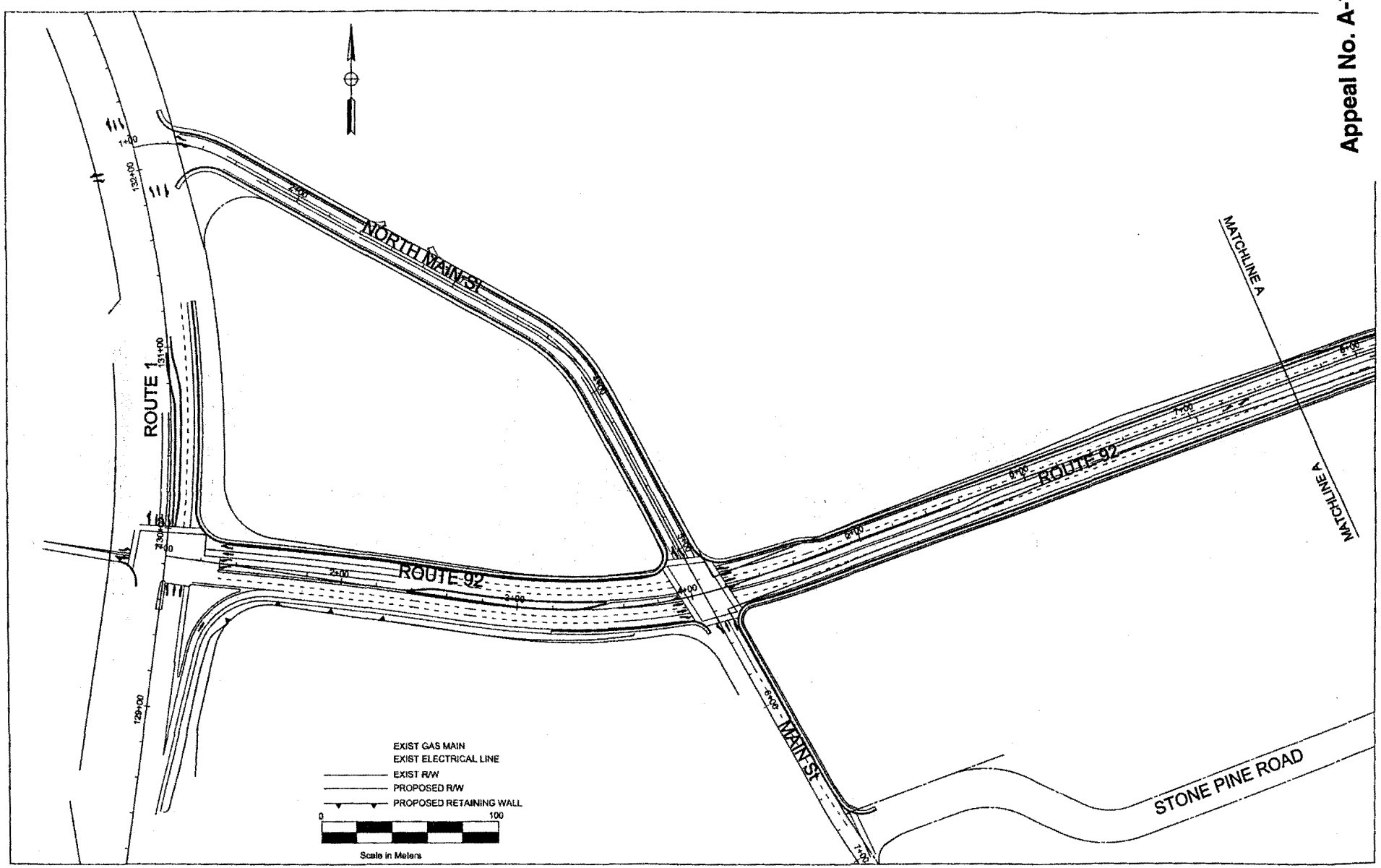

Figure 3a. Proposed Project

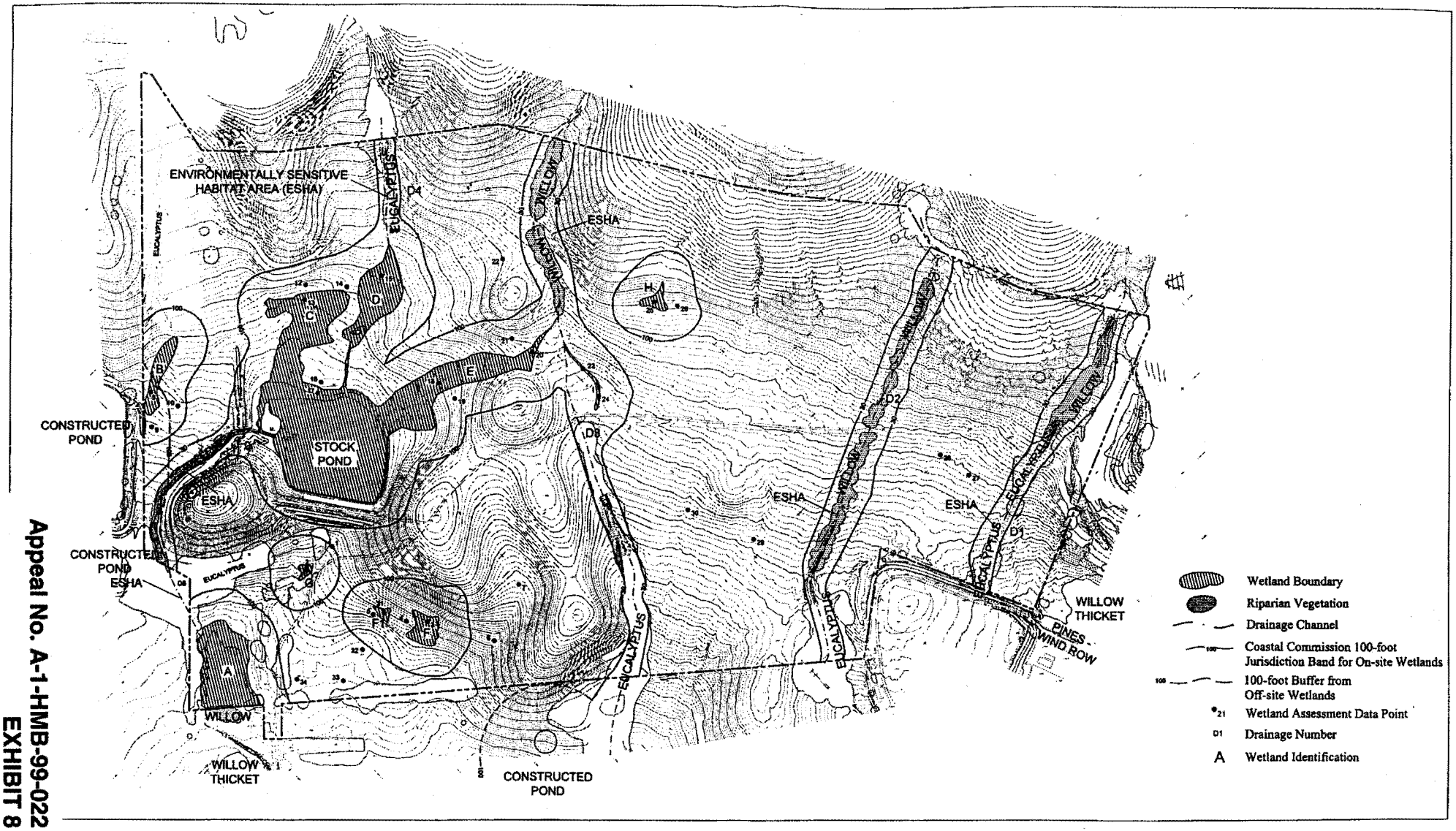

Appeal No. A-1-HMB-99-022
EXHIBIT 8

LSA
04-26-00(APR830ExistConTAB.dwg)
Scale in feet 0 300
N

Map 2 Pacific Ridge at Half Moon Bay
Existing Conditions and Required Buffer Zones

* NOTE: Staff modified site plan
[Exhibit based on site plan provided by applicant, but modifed by staff for purposes of this report.]

Pacific Ridge
at
Half Moon Bay

Site Plan*

145 LOTS

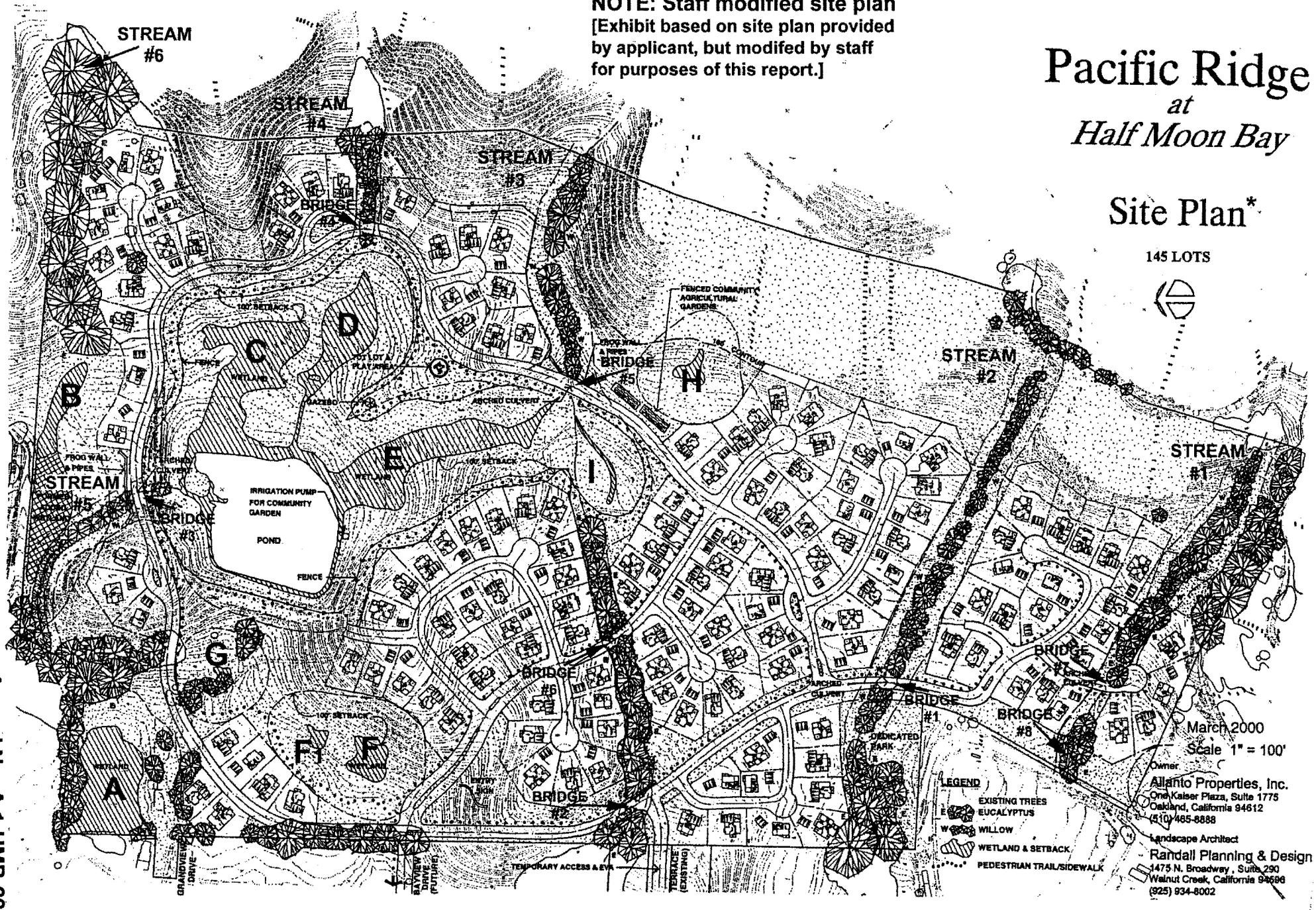

March 2000
Scale 1" = 100'

Owner
Atlanto Properties, Inc.
One Kaiser Plaza, Suite 1775
Oakland, California 94612
(510) 465-8888

Landscape Architect
Randall Planning & Design
1475 N. Broadway, Suite 290
Walnut Creek, California 94596
(925) 934-8002

Appeal No. A-1-HMB-99-022
EXHIBIT 9

Prime Agricultural Soils East of Highway 1
Vicinity of Pacific Ridge Subdivision

Pacific Ridge Subdivision

Prime Agricultural Soils *

N 0 500 1000 Feet

* Prime agricultural soils are also found west of Highway 1 and north of Frenchman's Creek.

- NOTE -
The information depicted on this map is subject to revision. Locations and scale approximate. For illustrative purposes only.

Data Source: Map 2 Pacific Ridge at Half Moon Bay Existing Conditions and Required Buffer Zones. LSA.

Basemap Source: Soil Survey, San Mateo California. USDA, SCS National Cartography and GIS Center, Fort Worth, TX. 1993.

Technical Services Division
California Coastal Commission

JVC, GMB, DR, MAC 4/00

CALIFORNIA COASTAL COMMISSION
NORTH CENTRAL COAST DISTRICT
45 FREMONT, SUITE 2000
AN FRANCISCO, CA 94105- 2219
OICE AND TDD (415) 904- 5260
AX (415) 904- 5400

F-7a

April 28, 2000

RECORD PACKET COPY

TO: Commissioners and Interested Parties

FROM: Chris Kern, North Central Coast District Supervisor

SUBJECT: Correspondence for May 12, 2000 Commission Agenda Item No. F-7a A-1-HMB-99-022 (Ailanto Properties – Pacific Ridge Development)

Attached is the correspondence received concerning the above referenced Commission agenda item. Because of the large volume of correspondence received, staff is distributing this packet separately from the April 27, 2000, staff report for this agenda item. The staff will provide copies of additional correspondence received after the date of this mailing with any subsequent staff report(s) for this matter. However, the attached correspondence will not be redistributed to the Commission or the interested parties to whom this packet has already been provided. Therefore, please retain this packet until final Commission action on this matter.

The attached correspondence includes:

June 24, 1999 letter from Stephen K. Cassidy, Attorneys for Ailanto Properties, to Steven Scholl, Commission Staff Deputy Director.

September 22, 199[9] letter from appellant George Carman, Coastside Community Counsel, to Steven Scholl Commission Staff Deputy Director.

September 30, 1999 letter from appellant Jonathan Wittwer to Steven Scholl, Commission Staff Deputy Director.

October 4, 1999 letter from Anna C. Shimko, Attorneys for Ailanto Properties, to Ralph Faust, Commission Staff Chief Legal Counsel.

October 28, 1999 letter from Stephen K. Cassidy, Attorneys for Ailanto Properties, to Steven Scholl, Commission Staff Deputy Director.

October 29, 1999 letter from Stephen K. Cassidy, Attorneys for Ailanto Properties, to Steven Scholl, Commission Staff Deputy Director.

November 15, 1999 letter from appellant Eleanor Wittrup to Jack Liebster, Commission Staff Analyst.

November 15, 1999 letter from appellants George Carman and Eleanor Wittrup to Jack Liebster, Commission Staff Analyst.

November 20, 1999 letter from James and Melissa Lane to Coastal Commission.

December 23, 1999 letter from Anna C. Shimko, Attorneys for Ailanto Properties, to Steven Scholl, Commission Staff Deputy Director.

January 13, 2000 letter from Robert Henry, Ailanto Properties, Inc., to Jack Liebster, Commission Staff Analyst.

January 21, 2000 letter from William W. Crowell, Beachwood Development, and Robert Henry, Ailanto Properties, Inc., to Half Moon Bay City Council.

January 24, 2000 letter from appellant George Carman to Jack Liebster, Commission Staff Analyst.

February 14, 2000 letter from Robert Henry, Ailanto Properties, Inc., to Dennis Coleman, Mayor of the City of Half Moon Bay, and Jack Liebster, Commission Staff Analyst.

February 15, 2000 letter from William P. Parkin to City of Half Moon Bay Mayor and City Council.

March 7, 2000 letter from Theodore Herhold, Coastside Community Association, to Sara Wan, California Coastal Commission Chair.

March 10, 2000 letter from appellant George Carman, Coastside Community Association, to Sara Wan, California Coastal Commission Chair.

April 4, 2000 letter from Anna C. Shimko, Attorneys for Ailanto Properties, to Jack Liebster, Commission Staff Analyst.

April 6, 2000 letter from Anna C. Shimko, Attorneys for Ailanto Properties, to Jack Liebster, Commission Staff Analyst.

April 18, 2000 letter William P. Parkin to Ann Cheddar, Commissin Staff Legal Counsel.

CASSIDY
CHEATHAM
SHIMKO &
DAWSON
A Professional Corporation

RECEIVED
JUN 25 1999
CALIFORNIA
COASTAL COMMISSION

June 24, 1999

VIA HAND DELIVERY

Steven F. Scholl
Robert S. Merrill
Bill Van Beckum
California Coastal Commission
45 Fremont Street, Suite 2000
San Francisco, CA 94105

Re: Pacific Ridge; Appeal No. A-1-HMB-99-022

Dear Messrs. Scholl, Merrill and Van Beckum:

As you know, we represent Ailanto Properties, Inc. ("Ailanto"), in connection with the captioned Appeal No. A-1-HMB-99-022 (the "Appeal") to the Coastal Commission of the approval by the City of Half Moon Bay ("City") of a Coastal Development Permit (CDP) for Ailanto's Pacific Ridge Project (the "Project"). At our May 7, 1999, meeting with you, you asked that Ailanto provide updated information germane to the Coastal Commission's Appeal jurisdiction and that Ailanto respond to certain preliminary issues identified by you in connection with the parameters and scope of the Appeal. This letter provides the information and sets forth that response.[1]

[1] This letter does not address each of the points raised in the Appeal. We will respond to all such issues at a later, more appropriate point in the process. The function of this letter is to address issues raised at our meetings that relate to the Commission's jurisdiction and the overall

You requested an updated wetlands delineation for the Project site, an analysis of the areas which fall within the Coastal Commission's jurisdiction on the Appeal, and an analysis of the policies and standards contained in City's Local Coastal Program ("LCP") pertaining to the definitions of and buffer zones for wetlands, riparian areas and environmentally sensitive habitat areas ("ESHAs") within the Project site which are subject to the Coastal Commission's jurisdiction on the Appeal. Each of these matters is discussed in turn in detail below.

You also asked for our analysis of whether certain provisions of the Coastal Act referenced in the LCP (namely, Pub. Res. Code §§ 30210-30264) have been incorporated into the LCP as policies and standards under the LCP, and whether compliance by City with the California Environmental Quality Act ("CEQA"; Pub. Res. Code § 21000 et seq.) is an issue appropriately before the Coastal Commission in the Appeal. We discuss our response in detail below.

To provide the information you requested, Ailanto's consultant, LSA Associates, Inc. ("LSA"), has prepared various maps and analyses. LSA first prepared the updated wetlands

---

regulatory framework for the Appeal.

delineation map. That map, denoted "Map 1", is enclosed for your information and review. LSA then prepared a second map based on Map 1, showing those areas which are subject to the Coastal Commission's jurisdiction on the Appeal. That map, denoted "Map 2", is also enclosed for your information and review. Finally, LSA prepared a third map showing those wetlands, riparian areas and ESHAs which are within the Coastal Commission's Appeal jurisdiction, as well as the buffer zones required for the wetlands and riparian areas under City's LCP. (No buffer zones are required for the sole ESHA within the Coastal Commission's Appeal jurisdiction, because it is exempt under City's LCP, a point discussed in more detail below.) This third map, denoted "Map 3", is enclosed for your information and review as well. LSA has also prepared a Biological Resources Report (the "Biological Report") which analyzes the technical bases for the Maps and updates previous reports on other biological resources on, and within 200 feet of, the Project site. The Biological Report is enclosed for your use and information.

I. <u>Updated Wetlands Delineation Map</u>

As explained in more detail in the Biological Report, LSA prepared Map 1, the updated wetlands delineation map, using

the definition of "wetlands" found in § 30121 of the Coastal Act and in § 13577(b) of the Coastal Commission Regulations contained in the California Code of Regulations ("CCR"), as well as the wetlands identification and delineation procedures set forth in the Coastal Commission's *Procedural Guidance for the Review of Wetland Projects in California's Coastal Zone* (the "Procedural Guide").[2] Use of these criteria yields the same wetlands delineation that would result from use of the U.S. Army Corps of Engineers' ("Corps") definition of wetlands and waters of the United States for purposes of a Clean Water Act § 404 permit, a point mentioned at our meeting. The Biological Report explains

---

[2] Section 30121 of the Coastal Act defines wetlands as "lands within the coastal zone which may be covered periodically or permanently with shallow water and include: saltwater marshes, freshwater marshes, open or closed brackish water marshes, swamps, mudflats and fens." Pub. Res. Code § 30121. CCR § 13577(b) defines jurisdictional wetlands as:

> land where the water table is at, near, or above the land surface long enough to promote the formation of hydric soils or to support the growth of hydrophytes, and shall also include those types of wetlands where vegetation is lacking and soil is poorly developed or absent as a result of frequent and drastic fluctuations of surface water levels, wave action, water flow, turbidity or high concentrations of salts or other substances in the substrate. Such wetlands can be recognized by the presence of surface water or saturated substrate at some time during each year and their location within, or adjacent to, vegetated wetlands or deep-water habitats.

The Procedural Guide states that wetlands are identified by one or more of the following key wetland characteristics: hydrology, hydric soils, and hydrophytic vegetation. Procedural Guide, p. 25.

this point in detail. Thus, as we mentioned at our meeting, the coincidence of the Corps delineation for purposes of the Section 404 permit issued for the Project and relied upon by City in issuing the CDP with the Coastal Act definition and Coastal Commission criteria for identifying and delineating wetlands indicates that use of either set of wetlands criteria would yield the same result under the LCP. (Of course, the new wetlands delineation shown on Map 1 has resulted in the identification of some new, recently formed wetlands on the Project site. This is discussed in more detail below and in the Biological Report.)

II. Coastal Commission's Appeal Jurisdiction

Map 2 shows those areas of the Project site which are subject to the Coastal Commission's jurisdiction on the Appeal. Under Coastal Act § 30603(a)(2), the Coastal Commission's jurisdiction in the Appeal is limited to areas within 100 feet of streams and wetlands. The standards for determining the precise boundaries of the Coastal Commission's jurisdiction are contained in CCR § 13577. Map 2 , setting out the precise boundaries of the Coastal Commission's jurisdiction, was prepared based on CCR § 13577.

Under CCR § 13577, jurisdictional streams are streams

mapped by the United States Geologic Service on the 7.5 minute quadrangle series (the "USGS Map"), or identified in a local coastal program, such as City's LCP. CCR § 13577(a). The precise jurisdictional boundaries of each mapped or identified stream are established by measuring 100 feet landward from the top of the bank of each stream (or deemed top of the bank pursuant to CCR § 13577(a)). Id. Ailanto's biologist, Steve Foreman of LSA, has reviewed the latest USGS Map and City's LCP for streams that have been so mapped or identified. The USGS Map identifies only Drainage 3 as a stream. See, USGS Map attached to the Biological Report as Figure 2. The USGS Map also erroneously identifies as a stream the area designated on the Maps as Wetland E, when in fact it is a wetland exempt from the Coastal Commission's jurisdiction (as explained below in this Part II). See, also, Biological Report, p. 19. The LCP identifies only Drainage 3 as a stream (a "riparian area" in the LCP parlance). See, LCP Habitat Areas and Water Resources Overlay Map. Thus, the only area of the Project site which meets the criteria for streams under CCR § 13577(a) is Drainage 3, as shown on Map 2. Map 2 also shows the 100 foot jurisdictional area from and around the top bank of Drainage 3.

Map 2 shows the jurisdictional wetlands based on the definition of wetlands set forth in CCR § 13577(b)(1) (see footnote 1, supra), and the exemption from Appeal jurisdiction of wetland habitats created by the presence of and associated with agricultural ponds and reservoirs under CCR § 13577(b)(2) (discussed in detail below with respect to the stock pond and associated wetland habitat areas delineated on Map 2). The precise boundaries of wetlands subject to the Coastal Commission's jurisdiction on the Appeal are established by measuring 100 feet landward from the upland limit of a wetland. CCR § 13577(b)(1). Wetlands B, C, D, F, H and I, and the 100 foot area surrounding each such wetland, are the wetland areas subject to the Coastal Commission's jurisdiction.

Neither the stock pond nor associated wetland habitat areas shown on Map 2 are within the Coastal Commission's jurisdiction in the Appeal. This results from CCR § 13577(b)(2), which provides:

> the term "wetland" shall not include wetland habitat created by the presence of and associated with agricultural ponds and reservoirs where: (A) the pond or reservoir was in fact constructed by a farmer or rancher for agricultural purposes; and (B) there is no evidence (e.g., aerial photographs, historical survey, etc.) showing that wetland habitat pre-dated the existence of

the pond or reservoir.

The stock pond is a wetland habitat, created for agricultural purposes in 1954 by Mr. Tjalling Dykstra, a farmer who once owned the property. Criterion (A) in CCR § 13577(b)(2) is, therefore, met. As to criterion (B) under CCR § 13577(b)(2), no evidence exists that any wetland in the area now occupied by the stock pond pre-dated the existence of the stock pond. In fact, all available evidence is to the contrary. Steve Foreman of LSA has reviewed historic aerial photographs of the property, and there is no evidence that any wetland existed in the area now occupied by the stock pond before the stock pond was created. A 1948 aerial photograph (the "1948 Photograph") shows no wetland or stock pond, confirming the point. See, 1948 Photograph, attached to the Biological Report as Appendix B. (Color renditions of the 1948 Photograph will be sent to you by separate cover.)

Three wetland habitat areas exist in the Project site that were created by the presence of, and associated with, the exempt agricultural stock pond (each hereinafter referred to as the "Stock Pond Wetland Habitat Area"), and are thus also exempt from the Coastal Commission's Appeal jurisdiction under CCR § 13577(b)(2). The first Stock Pond Wetland Habitat Area consists

of the marsh located in the northwest corner of the property, shown on Maps 1 and 2 as Wetland A. The 1948 photograph and another aerial photograph of the Project site from 1955 (the "1995 Photograph"), attached to the Biological Report as Appendix B, shows that the portion of the Project site now occupied by Wetland A then contained the residence and associated farm buildings for the property, with cultivated fields outside of the several buildings which were then present. (Color renditions of the 1955 Photograph will be sent to you under separate cover.) As explained in the Biological Report, the primary water source for Wetland A is an excavated ditch which was created as an outlet channel for the stock pond at or before 1983. As further discussed in the Biological Report, Wetland A was created and is supported by overflow and runoff from the stock pond and possibly two ponds immediately to the north on adjacent property.

The second Stock Pond Wetland Habitat Area is located between Drainage 3 and the stock pond, and is designated as Wetland E on Maps 1 and 2. This second Stock Pond Wetland Habitat Area was created by the construction of a dam and a smaller man-made agricultural pond across Drainage 3 near the head of Wetland E for the purpose of diverting water to feed the

stock pond.[3] Evidence of the dam and smaller pond appear in the 1955 Photograph. The dam and the smaller pond (which still exists on a smaller scale at the head of Wetland E) resulted in the flow of water to and through an area it would not otherwise traverse, ultimately forming Wetland E. When water is flowing in Drainage 3, the existing remnants of the dam divert water flow through Wetland E to feed the stock pond. This Stock Pond Wetland Habitat Area was clearly created because of the presence of, and associated with, the stock pond (and the remnant smaller pond, which itself is an agricultural pond created by a farmer for agricultural purposes) as a result of the installation of the dam.

The third Stock Pond Wetland Habitat Area is Wetland G (as shown on Maps 1 and 2), which Steve Foreman of LSA believes is most likely a periodic wetland appearing during above-normal rainfall years. This Stock Pond Wetland Habitat Area was created by seepage from the dam located on the western side of the stock pond.

In summary, the streams and wetlands subject to the Coastal Commission's jurisdiction on the Appeal are Drainage 3

---

[3] The Environmental Impact Report ("EIR") for the Project specifically acknowledges this diversion. See, EIR p. 58, attached hereto as Exhibit A.

and Wetlands B, C, D, F, H and I, as shown on Map 2.

III. Application of the LCP Policies That Set Boundaries for Wetlands, Riparian Areas and ESHAs Within the Coastal Commission's Appeal Jurisdiction.

The Coastal Act mandates that the Coastal Commission, when considering an appeal of a CDP approved by a city or county, apply the policies and standards contained in the city's or county's certified local coastal program within the area of the Coastal Commission's appeal jurisdiction. Specifically, Public Resources Code Section 30604(b) requires that a CDP be issued on appeal to the Coastal Commission if the Coastal Commission finds that the proposed development is in conformity with the certified local coastal program. This portion of our letter, then, analyzes the application of City's LCP policies which apply within the Coastal Commission's jurisdiction on the Appeal with respect to the definitions of, and buffer zones for, wetlands, riparian areas, and ESHAs.[4]

---

[4] City's certified LCP consists of the 1993 Land Use Plan (LUP) and the Implementation Plan (IP), which was certified in 1996 and consists of City ordinances that implement the LUP, such as the Subdivision Ordinance, Park Ordinance, Zoning Maps and the current Zoning Ordinance ("Z.O."). We note that City's 1990 approval of Ailanto's vesting tentative map under the Subdivision Map Act conferred on Ailanto a vested right to proceed with development of the Project in accordance with the ordinances, policies and standards in effect on the date City determined Ailanto's vesting tentative map application was complete in 1987. As we pointed out in the proceedings before City on Ailanto's CDP application, only the Coastal Commission

A. Streams (Designated as Riparian Areas in the LCP)

The sole stream located within the Coastal Commission's jurisdiction on the Appeal is Drainage 3, as shown on Map 3. Streams such as Drainage 3 are designated as riparian areas under the LUP. See, LUP Policy 3-8. The scope of the riparian area within Drainage 3 was determined based on the definition of riparian areas and corridors set forth in the LUP Appendix, LUP Policy 3-7 and Z.O. §18.38.020.B.[5]

The buffer zone that pertains to Drainage 3 is based on the requirements set forth in LUP 3-11 and Z.O. § 18.38.075.D,[6] and is shown on Map 3. Specifically, a 30 foot buffer has been established around Drainage 3. Under the LUP and Z.O.

---

certified 1985 Land Use Plan ("1985 LUP") and the Pacific Ridge Planned Unit Development, codified in Z.O. Chapter 18.16 ("PUD") and certified in 1996 as part of City's IP (the "PUD Ordinance"), apply here, as these were the only relevant ordinances, policies and standards in effect when Ailanto's vesting tentative map application was deemed complete. However, the LUP and the Z.O. are not materially different from the 1985 LUP as to the applicable policies and standards that apply to the Project. The only difference between the LUP and the 1985 LUP is that the former incorporates language on Measure A, which does not apply to the Project. The Z.O. reiterates and clarifies the policies set forth in both the 1985 LUP and the LUP. Thus, we utilize in this letter the policies set forth in the LUP and the Z.O., noting that the Project complies with not only the 1985 LUP and the PUD Ordinance (as noted, part of City's LCP), but also the policies and standards set forth in the LUP and the Z.O.

[5] Even though Z.O. Chapter 18.38 was not in effect until 1996, when the Coastal Commission certified the IP, the Project complies with it. See, foonote 3, above.

[6] See, footnotes 3 and 4, above.

requirements, for those portions of Drainage 3 with riparian vegetation, the 30 foot buffer was measured from the limit of riparian vegetation, and where no riparian vegetation exists along portions of Drainage 3, the 30 foot buffer is measured from the mid-point of Drainage 3.

B. Wetlands

Wetlands located within the areas subject to the Coastal Commission's jurisdiction are shown on both Map 2 and Map 3 as Wetlands B, C, D, F, H and I. The LCP prescribes no general buffer zone requirement for wetlands. LUP Policy 3-11(c) requires a 100 foot buffer only along "lakes, ponds and wet areas." Z.O. §18.38.80.D, adopted as part of the IP, clarifies and implements this general LUP policy, requiring a 100 foot buffer around "lakes, ponds and marshes."[7] Thus, under the LCP, lakes, ponds, and marshes require a 100 foot buffer. No lakes, ponds or marshes are located within the areas subject to the Coastal Commission's jurisdiction. Thus, wetlands buffer zone requirements will not figure in the Coastal Commission's consideration of the Appeal.

---

[7] Even though Z.O. Chapter 18.38 was not in effect until 1996 when the Coastal Commission certified the IP, the Project complies with it. See, footnote 3, above.

C. ESHAs

In addition to LCP policies with respect to riparian areas and wetlands, policies in the LCP pertaining to ESHAs also apply within certain areas under the Coastal Commission's Appeal jurisdiction. Policy 3-1 of the LUP defines ESHAs as:

> [A]ny area in which plant or animal life or their habitats are either rare or especially valuable and as those areas which meet one of the following criteria: (1) habitats containing or supporting "rare and endangered" species as defined by the State Fish and Game Commission, (2) all perennial and intermittent streams and their tributaries, (3) coastal tidelands and marshes, (4) coastal and offshore areas containing breeding and/or nesting sites and coastal areas used by migratory and resident water-associated birds for resting and feeding, (5) areas used for scientific study and research concerning fish and wildlife, (6) lakes and ponds and adjacent shore habitat, (7) existing game and wildlife refuges and reserves, and (8) sand dunes. ¶ Such areas include riparian areas, wetlands, sand dunes, marine habitats, sea cliffs, and habitats supporting rare, endangered, and unique species.

ESHAs located within the areas subject to the Coastal Commission's jurisdiction on the Appeal are shown on Map 3 based on this definition. For the reasons explained below the only ESHA subject to the Coastal Commission's jurisdiction is Drainage 3.

The other areas in the Project site subject to the

Coastal Commission's jurisdiction on the Appeal comprised of on-site wetlands are not ESHAs because of specific LCP policies. First, the stock pond (most of which falls outside the Coastal Commission's jurisdiction) is not an ESHA because LUP Policy 3-8 exempts man-made ponds over 2,500 square feet from ESHAs lakes.[8]

The other wetlands under Coastal Commission jurisdiction on the Appeal are also not ESHAs under the LCP. LUP Policy 3-1 cited above states that "such areas" (i.e., those ESHAs described in clauses (1) to (8) of that Policy) "include" riparian areas and wetlands "*supporting* rare, endangered and unique species."[9] As discussed in the Biological Report, none of

---

[8] LUP Policy 3-8 states, "[d]esignate those corridors shown on the Habitat and Water Resources Overlay and any other riparian area as sensitive habitats requiring protection, except man-made irrigation ponds over 2,500 square feet surface area."

[9] Defining ESHAs by their ability for supporting rare, endangered and unique species is consistent with the Coastal Act definition of ESHAs: "[A]ny area in which plant or animal life or their habitats are either rare or especially valuable because of their special nature or role in the ecosystem . . . ." Pub. Res. Code § 30107.5. Consistent with this Coastal Act provision, Z.O. §18.38.035B.1 distinguishes between ESHAs and wetlands in connection with resource mapping. The Coastal Commission's Procedural Guide recognizes that not all wetlands are ESHAs. Instead, the Procedural Guide states that "numerous coastal wetland ... are considered [ESHAs] because they provide critical habitat to threatened or endangered species, or because of their uniqueness relative to the surrounding landscape." Procedural Guide, p. 60. The Procedural Guide also refers to a local government's option of regulating wetlands by identifying wetlands as ESHAs in its LCP or by developing its own policies to protect wetlands in its LCP. Procedural Guide, p. 61. City obviously chose the latter route, since its LCP separately defines and regulates ESHAs and wetlands. (See, e.g., Z.O. § 18.38.020 and 18.38.035.A. See also, Pub. Res. Code § 30233(a)(b), which permits [under certain circumstances] diking, filling or dredging of wetlands for mineral extraction,

the wetlands within the Project site (including those under the Coastal Commission's jurisdiction) support rare, endangered and unique species, and therefore none of the wetlands are ESHAs. A number of biological surveys have been conducted (including in connection with the Biological Report) and no rare, endangered or unique species have ever been found on the Project site.

IV. Incorporation of Chapter 3 of the Coastal Act into the LCP

At your urging, we have thoroughly reviewed the issue of whether, by referencing Coastal Act §§ 30210-30264 in the LUP, City intended to incorporate those sections as part of the LUP policies governing CDPs. We conclude that City did not intend this result. Based on our review of the LUP as a whole, it is clear that City intended §§ 30210-30264 to serve as a framework for the LCP policies that were adopted by City in its LUP, not as governing provisions to be applied by City under the LUP. Several reasons support this conclusion.

First, LUP Policy 1-1 states that, "City shall adopt Coastal Act policies in sections 30210-30264 as the *guiding* policies of the LUP." LUP, Policy 1-1 (emphasis added). "Guide"

---

except in ESHAs, reinforcing the differentiation between wetlands and ESHAs.)

and "guiding" are defined as "to direct in a way or course," "to direct, supervise or influence" or "to superintend the training or instruction of." Webster's 9th New Collegiate Dictionary (1988). The mandate in Policy 1-1 is not for City to adopt Coastal Act Sections 30210-30264 as LCP policies *per se*, but rather to adopt them for the purpose of directing the course of, and influencing, the ultimate policies adopted as part of the LUP. Policy 1-1 is also prefaced as one of the "general policies that shall provide the *framework* for the Coastal Land Use Element." LUP, p. 20 (emphasis added). "Framework" is defined as "a basic structure (as of ideas)." Webster's 9th New Collegiate Dictionary (1988). Adopting a "guide" or "framework" does not transmute the guide or framework into a governing policy. Rather, Policy 1-1, as a "guide" and "framework" serves to provide one of the several analytical tools utilized by the LUP in formulating the ultimate policies that were adopted by City in its LUP.

This point is illustrated by the LUP text which discusses these Coastal Act Sections. In that discussion, the LUP notes that the LUP policies are a product of <u>balancing</u> Coastal Act and Government Code requirements (which sometimes

conflict) -- not a blanket adoption of Coastal Act policies on coastal resource protection.

The LUP contains extensive discussion on this point, observing that in adopting the LUP, City had to consider not only its responsibilities under the Coastal Act, but also its responsibilities as a general law city, including its status as the only major urban center in the mid-coast region that could meet the residential, commercial, cultural and other social and economic needs of its residents, the entire mid-coast population and visitors from throughout the State. See, e.g., LUP p. 15 - 18. The LUP states that, "City has considered, weighed, and balanced its various responsibilities to its residents, the mid-coast regional population, and the citizens of the State as a whole under not only the Coastal Act but also the Government Code." LUP, p 17. And importantly, the LUP states that, "City has weighed its obligations under the Government Code against the *specific resource protection policies* of the Coastal Act and has concluded that the level of development permitted by [the LUP][10] represents the appropriate balance between the potentially

---

[10] The level of development permitted in the LUP includes the Project; in fact, the Project is even accounted for in the LUP's build-out calculations.

conflicting policies of the Government Code and the Coastal Act." Id. (emphasis added) Clearly, a conclusion that Coastal Act §§ 30210-30264 (which set forth the coastal resource and management policies) have been incorporated and adopted *in toto* as part of the LUP would contravene the LUP's acknowledgment that its policies are a *result* of *balancing* the coastal resource protection standards of the Coastal Act and the requirements of City under the Government Code (such as providing sufficient housing).

Illustrating the foregoing points, the LUP states that its policies are organized into major topics reflecting principal coastal resource protection and development issues *arising* out of the Coastal Act, and that each of the sections are "*prefaced* with pertinent policies from the Coastal Act and is followed by a discussion of critical local issues and problems related to the topic . . . . At the end of each topical section, the City has *adopted* policies which bring its General Plan into conformance with the Coastal Act." LUP, p. 18 (emphasis added). The LUP does not provide an exception to this general organizational structure for the policies contained in Coastal Act §§ 30210 to 30264. This again demonstrates that these Coastal Act policies

germane to each topic serve as a starting point (not a controlling point) for the policies ultimately adopted under each topic.

V. CEQA

At our meeting, we discussed whether City's compliance with CEQA in acting on the CDP for the Project was an issue properly to be considered by the Coastal Commission in the Appeal. You replied that issues related to CEQA review, including a locality's compliance with CEQA in approving a CDP, will normally not be addressed by the Coastal Commission because the Coastal Commission's certification of local coastal programs operates as a functional equivalent to CEQA review under a certified regulatory program pursuant to Pub. Res. Code § 21080.5. You noted that the one potential exception would be where the applicable LCP either incorporates CEQA in its entirety or requires CEQA review at particular stages, thereby making CEQA compliance an LCP consistency issue for consideration by the Coastal Commission. We have reviewed the entire LCP with this issue in mind, and have concluded that City's CEQA process for the CDP does not implicate LCP consistency issues.

The LCP does not incorporate the provisions of CEQA or

the CEQA Guidelines (14 Cal. Code Regs § 15000 et seq.). The LUP does contain a section that is devoted to development of the Pacific Ridge property. See, LUP Section 9.3.7.[11] This Section of the LUP requires, as a proposed development condition for the Project, that a specific plan be prepared for the property, and that such plan "shall be subject to environmental review under City's CEQA guidelines." As you are aware, a planned unit development plan was prepared as the specific plan for the Project "to guide the orderly development of the Dykstra Ranch property consistent with the goals, objectives, and policies of the City of Half Moon Bay Local Coastal Plan and Municipal Code." Z.O. § 18.16.005. The PUD Ordinance in the Z.O., as well as the vesting tentative map for the Project, were approved by City in 1990 following preparation of a comprehensive environmental impact report under CEQA, which addressed impacts related to the Project. The PUD Ordinance, as codified in City's Z.O. Chapter 18.16, was certified by the Coastal Commission as part of City's LCP. The PUD Ordinance specifically recognizes that the development standards contained within the PUD Ordinance "represent the required conditions imposed upon the development

[11] § 9.3.7 of the LUP is titled "Dykstra Ranch", which is the former name of the Pacific Ridge property.

in conjunction with the approval of the Vesting Tentative Map, the mitigation measures set forth in the Certified Final Environmental Impact Report, and the requirements of the Site and Design Permit." Z.O. § 18.16.005. Thus, City's adoption of the PUD Ordinance following completion of the EIR for the Project satisfies the LUP's requirement for environmental review of the Project. That process was finally concluded nearly a decade ago, and cannot be revisited at this stage.

Likewise, the requirements pertaining to CEQA review which are contained in City's Coastal Resource Conservation Standards ordinance were satisfied through City's environmental review process described above. Z.O. § 18.38.050 states that "[p]rojects proposed within Coastal Resource Areas shall be evaluated in an Initial Study and any necessary subsequent C.E.Q.A. documents . . . ." Accordingly, when the initial Project was proposed, City prepared an initial study and a full EIR -- the necessary subsequent CEQA document flowing from the initial study. City's CEQA process in 1990 (which is <u>not</u> the subject of this Appeal) not only comported fully with all requirements for CEQA review within the LCP, but also fulfilled the mandate of CEQA that CEQA review occur "as early as feasible

in the planning process to enable environmental considerations to influence project program and design and yet late enough to provide meaningful information for environmental assessment." CEQA Guidelines § 15004(b). The portion of City's LCP that governs the issuance of CDPs (Z.O. Chapter 18.20) does not refer to CEQA or require any form of environmental review for the issuance of CDPs. Since there are no pertinent LCP policies related to CEQA review at the CDP stage, there exists no CEQA-related issue for the Coastal Commission to review in addressing consistency of the CDP for the Project with City's LCP.

Furthermore, as you may be aware, a lawsuit has recently been filed against City challenging the adequacy of CEQA review to support City's approval of the CDP. This occurrence is a separate and independent reason that the Coastal Commission should not consider, and indeed is precluded from considering, the adequacy of City's CEQA review as related to the CDP. In this Appeal, the Coastal Commission is acting as a responsible agency, which is defined under CEQA as a public agency "which has the responsibility for carrying out or approving a project" for which a lead agency (here, City when it approved the Project as a whole) is preparing or has prepared an EIR or Negative

Declaration." Pub. Res. Code § 21069; CEQA Guidelines § 15381. Responsible agencies include all public agencies, other than the lead agency, that have discretionary approval power over a project, and are usually agencies (such as the Coastal Commission) with a single or limited purpose. CEQA Guidelines § 15381. When a lawsuit challenging a lead agency's compliance with CEQA is filed, responsible agencies are obligated to assume that the environmental document (here, a negative declaration prepared for the CDP to demonstrate that the 1990 EIR remains valid and that no subsequent environmental review was necessary) is valid, and the responsible agencies must act upon the project as if the environmental review were sufficient. Pub. Res. Code § 21167.3(b). In light of the pendency of a CEQA action against City with respect to the CDP, the Coastal Commission is charged with assuming that City's actions comported with CEQA. Therefore, City's CEQA review for the CDP cannot be part of the Coastal Commission's consideration of the Appeal.

***

We hope that the information contained in this letter and submitted with it is useful to your analysis of the issues on the Appeal. Nancy Lucast will contact you to schedule a meeting

in the near future so that you can provide us with your comments to our submittals and we can reach an agreement as to the Coastal Commission's jurisdiction in the Appeal and the applicable standards for judging the merits of the Appeal. We look forward to meeting with you. In the meantime, if you have any questions or need additional information, please do not hesitate to contact the undersigned or Anna Shimko or Yuri Won of this firm.

Very truly yours,

CASSIDY, CHEATHAM, SHIMKO & DAWSON

By: _____
Stephen K. Cassidy
Attorneys for Ailanto Properties, Inc.

encl.
cc: Ann Cheddar
Albert Fong
Robert Henry
Dana Owyoung
Nancy Lucast
Steve Foreman
Anna Shimko
Yuri Won

as shown on Figure 4.3-2. Other sources of water to the pond include: 1) the pond area itself; 2) approximately 10 acres of land between the pond and the upslope property line; and 3) occasional overflows from adjacent northern and southern drainage courses. The next stream to the south was at one time apparently diverted to the north between two low hills to help fill the pond. Subsequent siltation and construction of berms has redirected most of the streamflow back into the natural, westerly flowing channel. A breach in the secondary embankment on the northwest side of the pond has greatly reduced the original 51 acre-foot capacity of the pond, and the pond now drains through a man-made channel around the low hill northwest of the pond. The water leaves the pond and drains via ditches and culverts along Grand View Boulevard, flowing south to the south side of the Grand View Terrace development. It then crosses Grand View Boulevard and Highway 1 and discharges to Pilarcitos Creek just upstream of its mouth.

Flooding and Offsite Stormwater Systems

Prior to a flood improvement project by the Terrace Avenue Assessment District, flooding at the Highway 1 Grand View Boulevard intersection was common. The District intercepted a substantial portion of the upstream watershed and put it into the Chesterfield Ditch via an 84-inch pipe. The flooding situation has been greatly improved as a result.

The other (central) drainages exit the property and are conveyed via existing underground storm drainage pipes in the Chesterfield system of the Assessment District (see Hydrology Map, Figure 4.3-1). The most southerly drainage (#1) leaves the property through a storm drain at the property boundary then joins the existing Half Moon Bay High School storm drainage system. A 36-inch pipe intercepts an existing creek (drainage #2) at the boundary at Highland Avenue. A 48-inch pipe intercepts the central creek some 200 feet west of the boundary. There is a 15-inch pipe at the boundary 500 feet north of the 48-inch pipe which picks up local drainage from a small area. The storm drainage system eventually discharges to Pilarcitos Creek approximately 1,400 feet upstream from its mouth.

Springs and Seeps

Springs, seeps, and wet areas occur within the study area downslope of the dam, northeast of the pond, and in scattered locations within alluvium, as indicated on the Geology Map (see Figure 4.2-4). Downstream from the pond in

Jonathan Wittwer
William P. Parkin
Tina Wallis
Christiane Sinclair

WITTWER & PARKIN, LLP
147 SOUTH RIVER STREET, SUITE 221
SANTA CRUZ, CALIFORNIA 95060
TELEPHONE: (831) 429-4055
FACSIMILE: (831) 429-4067
E-MAIL: office@wittwerparkin.com

September 30, 1999

SENT VIA FACSIMILE AND U.S. MAIL

Steve Scholl, District Director
John Dixon, Biologist
California Coastal Commission
45 Fremont Street, Suite 2000
San Francisco, CA 94105
Facsimile: (415) 904-5400

Re: Pacific Ridge; Appeal No. A-1-HMB-99-022

Gentlemen:

This letter is being submitted on behalf of appellants George Carman and Eleanor Wittrup to address Stephen Cassidy's letter of June 24, 1999 to Steven Scholl, et al. concerning the wetlands on the Pacific Ridge site.

As you know Mr. Cassidy represents the applicant, Ailanto Properties. There are two central issues with respect to the wetlands on the Pacific Ridge Development that Appellant wishes to respond to as described below.

1) The Commission's jurisdiction is not limited to only parts of the Pacific Ridge Project

In his letter, Mr. Cassidy appears to confuse initial jurisdictional prerequisites with the Commission's power to review the entire Pacific Ridge Project. His letter suggests that the Commission can only review those parts of the project that are within wetlands, streams, environmentally sensitive habitats, and their related buffers. The applicant divines this theory from Public Resources Code Section 30603 and 14 CCR Section 13577 which list the jurisdictional prerequisites for appeals to the Coastal Commission. But, these sections merely establish those instances in which the Commission has jurisdiction to hear an appeal, not the parameters under which such review is to take place once jurisdiction is established. Once the Commission's Jurisdiction is established pursuant to Public Resources Code Section 30603, the matter must be reviewed *de novo*. *See* Public Resources Code Section 30621. That is, that the entire application/permit is subject to the Commission's review.

According to Black's Law Dictionary, "Hearing De Novo" means:

> "Generally, a new hearing or a hearing for a second time, contemplating an entire trial in the same manner in which was originally heard and a review of previous hearing. Trying matter anew the same as if it had not been heard before and as if no decision had been previously rendered."

Clearly, the applicant's strained interpretation of the Commission's jurisdiction makes no sense. The Commission must be permitted to review the entire project in its complete context. To limit its power to only parts of the Project without looking at the whole would be absurd.

2) <u>An ephemeral stream runs directly into the stockpond. Accordingly, there is evidence that the area where the stockpond is located was previously wetland habitat that is not excluded pursuant to 14 CCR Section 13577.</u>

Ailanto also contends that the Stock Pond on the property is not a wetland pursuant to the Coastal Act because of 14 CCR Section 13577 excludes the stockpond from the definition:

> "wetland habitat created by the presence of and associated with agricultural ponds and reservoirs where:
>
> (A) the pond or reservoir was in fact constructed by a farmer or rancher for agricultural purposes; and
> (B) there is no evidence (e.g., aerial photographs, historical survey, etc.) showing that wetland habitat pre-dated the existence of the pond or reservoir." 14 CCR Section 13577(b)(2).

Appellants reiterate that Section 13577 is only intended to establish the boundaries of appellate jurisdiction of the Commission. Indeed, the Coastal Act provides a broad definition of wetlands which encompasses the stock pond that is at issue. Public Resources Code Section 30121 defines "wetland" as meaning "lands within the coastal zone which may be covered periodically or permanently with shallow water and include saltwater marshes, freshwater marshes, open or closed brackish water marshes, swamps, mudflats, and fens." Nothing in this definition distinguishes between those areas created naturally or for historic agricultural use.

Assuming, *arguendo*, that Section 13577 does more than establish jurisdictional prerequisites for Coastal Commission review, Section 13577 would not preclude the consideration of the stock pond as a wetland.

In our review the environmental impact report ("EIR") for the Dykstra Ranch Project, which was the previous incarnation of the Pacific Ridge Project, it is clear that the stockpond is predominantly fed by a stream that runs from the hillside to the east of the pond. *See* Exhibit

"A" attached hereto which shows the hydrology of the site as portrayed in the Dykstra Ranch EIR. This stream has been characterized as "ephemeral". Since the stream shown in Exhibit "A" is ephemeral, there would be no indication of wet areas in a September 26, 1948 Photo of the site that the applicant contends proves there were no wet areas prior to the creation of the stock pond. Given that September 26 occurs during the driest time of the year, a photo taken at that time would not be indicative of any wet areas on the site.[1] Since the water from the ephemeral stream had to run somewhere, it logically ran through the area that is now the site of the stockpond, as well as downhill to Wetland A which Mr. Cassidy also asserts was only created in relation to the stockpond. To assert otherwise would defy common sense. In point of fact, the Biological Resources Report dated June 15, 1999 and prepared by LSA Associates, Inc., at p. 16, states that:

> "A constructed agricultural pond is located between two knolls in the north and central portion of the property."

Obviously, the stream previously ran through, and water presumably collected, between these two knolls before the dams were constructed. The site of the pond clearly contained preexisting wetland habitat. Accordingly, the stockpond is not excluded from the definition of a stockpond pursuant to 14 CCR Section 13577 because it is not true that "there is no evidence (e.g., aerial photographs, historical survey, etc.) showing that wetland habitat pre-dated the existence of the pond or reservoir."

Thank you for your consideration of these comments.

Very truly yours,

Jonathan Wittwer

cc: Anne Cheddar, Esq.

---

[1] Likewise, the fact that the next site visit by Commission Biologists is scheduled for October 1, 1999 during the same dry period, Appellants are concerned that an inaccurate picture of the extent of the wetlands will be obtained.

Copy

COASTSIDE COMMUNITY ASSOCIATION
P. O. Box 111, Half Moon Bay, CA 94019
Voice/Fax: 650-560-9330 Email: CoastsideCommunity@att.net
Dedicated to improving our quality of life on the Coastside.

Mr. Steve Scholl, Deputy Director
Mr. Daryl Rance, North Central Coast Supervisor
California Coastal Commission
45 Freemont Street, Suite 2000
San Francisco, CA 94105

RECEIVED
OCT 0 1 1999
CALIFORNIA
COASTAL COMMISSION

September 22, 1998

Dear Mr. Scholl and Mr. Rance:

We are writing with concern about the pending appeals of the Pacific Ridge development proposed by Ailanto Properties. We had expected these appeals to be heard last May, but understand that the developer waived their right to a timely hearing, and began a series of discussions with the Coastal Commission. The developer and his attorneys Cassidy, Shimko, et. al. have raised the question of the extent of the Coastal Commission's jurisdiction. Central to this question are the extent of wetlands, riparian corridors, environmentally sensitive habitats, and their buffer zones. Accurate information on this issue has been lacking because the applicant failed to provide a current biological resources report using the criteria for wetlands, riparian corridors, environmentally sensitive habitat areas, and their buffers as required by the Half Moon Bay Local Coastal Program (LCP). To remedy this, a new "Biological Resources Report / Pacific Ridge at Half Moon Bay" dated July 15, 1999 was prepared by LSA Associates. We wish to bring to your attention that the LSA report is fundamentally flawed in at least two ways.

First, LSA is confused about the definition of wetlands in Half Moon Bay. The relevant definitions are set forth in the Half Moon Bay LCP policies 3-1, 3-2 (1) and in the LCP Appendices - Special Definitions (2). Our LCP adapts (not adopts) the definition of the U.S. Fish and Wildlife Service, and recognizes wetlands based on the presence of either hydric soils or hydrophytic plants. The LCP definition explicitly states that "the most important feature which acts as a common denominator is the soil." Yet LSA Associates chose to completely discount the soil criterion, apparently since much of Dykstra Ranch has hydric soils and would therefore be considered wetlands under our LCP. We have other concerns as well (3).

Second, LSA is confused about the requirements for buffer zones in Half Moon Bay. The relevant criteria are set forth in the Half Moon Bay LCP Policy 3-11 on "Establishment of Buffer Zones" (1). This policy states that "along lakes, ponds, and other wet areas, extend buffer zones 100 feet from the high water point, except for man-made ponds and reservoirs used for agricultural purposes." The intent of this exclusion was to allow farmers to construct and use such ponds without having to create buffer zones. LSA has chosen to exclude the buffer zones on this basis, even though the pond is no longer being used for agricultural purposes, and is not intended for such use in the development. The Half Moon Bay Zoning Ordinance for Dykstra Ranch 18.16.055 sets forth that the pond "shall be retained and upgraded as a visual amenity and wildlife habitat" (4).

The Coastal Commission has gone on record as considering the pond valuable as habitat "regardless of whether it is 'natural' or 'man made'" (5). Likewise, the U.S. Fish and Wildlife Service has objected to the inadequate buffer zones and the intrusion of lot lines into the buffer zones around the pond and associated habitat (6). Indeed, LSA Associates has previously recognized and accepted the requirement for such buffer zones in earlier correspondence (7).

Such errors may be the result of a bias by LSA Associates to produce a report favorable to their employer, namely the developer Ailanto Properties. Nevertheless, we are shocked and dismayed that Ailanto and their attorneys Cassidy, Shimko, et. al. would attempt to use the flawed LSA report to challenge the jurisdiction of the California Coastal Commission. We will not abide such a blatant attempt to defy the law and subvert the will of the people of the City of Half Moon Bay and the State of California.

We urge you to demand a true and accurate mapping of wetlands, riparian areas, environmentally sensitive habitat areas, and their buffer zones. Such a mapping is required before a Coastal Development Permit can be granted. Such a mapping can only be obtained by an unbiased and independent consultant committed to upholding the policies and definitions in the Half Moon Bay Local Coastal Program and the California Coastal Act.

We also urge you to recommend findings of substantial issue and to recommend a *de novo* hearing of the application for this Coastal Development Permit so that all the concerns raised in the pending appeals can be addressed.

Sincerely,

George Carman
For the Coastside Community Association

Footnotes:

1. Half Moon Bay LCP, Chapter 3, Policies
2. Half Moon Bay LCP, Appendices - Special Definitions
3. Letter from Eleanor Wittrup to Mr. Dixon, California Coastal Commission
4. Section 18.16.055 Half Moon Bay Zoning Ordinance
5. Letter of 08.08.1988 to Kerry Burke, City of Half Moon Bay, from Les Strnd of CCC, pp. 2-3
6. Letter of 11.16.1998 to Calvin Fong, USACE, from Wayne Whyte, US Fish and Wildlife Service, pp. 2-3
7. Letter of 10.02.1998 to Curt McCasland, US Fish and Wildlife, from Steve Forman, LSA Associates, pp. 1-2

Attachment 1

No threatened and endangered species have been documented in Half Moon Bay.

3.5 Policies

The City will:

3-1 Definition of Sensitive Habitats

(a) Define sensitive habitats as any area in which plant or animal life or their habitats are either rare or especially valuable and as those areas which meet one of the following criteria: (1) habitats containing or supporting "rare and endangered" species as defined by the State Fish and Game Commission, (2) all perennial and intermittent streams and their tributaries, (3) coastal tidelands and marshes, (4) coastal and offshore areas containing breeding and/or nesting sites and coastal areas used by migratory and resident water-associated birds for resting and feeding, (5) areas used for scientific study and research concerning fish and wildlife, (6) lakes and ponds and adjacent shore habitat, (7) existing game and wildlife refuges and reserves, and (8) sand dunes.

Such areas include riparian areas, wetlands, sand dunes, marine habitats, sea cliffs, and habitats supporting rare, endangered, and unique species.

3-2 Designation of Sensitive Habitats

(a) Designate sensitive habitats as those, including but not limited to, shown on the Habitat Areas and Water Resources Overlay.

3-3 Protection of Sensitive Habitats

(a) Prohibit any land use and/or development which would have significant adverse impacts on sensitive habitat areas.

(b) Development in areas adjacent to sensitive habitats shall be sited and designed to prevent impacts that could significantly degrade the environmentally sensitive habitats. All uses shall be compatible with the maintenance of biologic productivity of such areas.

3-4 Permitted Uses

(a) Permit only resource-dependent or other uses which will not have a significant adverse impact in sensitive habitats.

(b) In all sensitive habitats, require that all permitted uses comply with U. S. Fish and Wildlife and State Department of Fish and Game regulations.

3-5 Permit Conditions

(a) Require all applicants to prepare a biologic report by a qualified professional selected jointly by the applicant and the City to be submitted prior to development review. The report will determine if significant impacts on the sensitive habitats may occur, and recommend the most feasible mitigation measures if impacts may occur.

The report shall consider both any identified sensitive habitats and areas adjacent. Recommended uses and intensities within the habitat area shall be dependent on such resources, and shall be sited and designed to prevent impacts which would significantly degrade areas adjacent to the habitats. The City and the applicant shall jointly develop an appropriate program to evaluate the adequacy of any mitigation measures imposed.

(b) When applicable, require as a condition of permit approval the restoration of damaged habitat(s) when, in the judgment of the Planning Director, restoration is partially or wholly feasible.

3-6 Allocation of Public Funds

(a) In setting priorities for allocating limited local, State, or Federal public funds for preservation or restoration, use the following criteria: (1) biological and scientific significance of the habitat, (2) degree of endangerment from development or other activities, and (3) accessibility for educational and scientific uses and vulnerability to overuse.

RIPARIAN CORRIDORS

The City will:

3-7 Definition of Riparian Corridors

(a) Define riparian corridors by the "limit of riparian vegetation" (i.e. a line determined by the association of plant and animal species normally found near streams, lakes, and other bodies of fresh water: red alder, jaumea, pickleweed, big leaf maple, narrowleaf cattail, arroyo willow, broadleaf cattail, horsetail, creek dogwood, black cottonwood, and box elder). Such a corridor must contain at least a 50% cover of some combination of the plants listed.

3-8 Designation of Riparian Corridors

(a) Establish riparian corridors for all perennial and intermittent streams and lakes and other bodies of fresh water in the Coastal Zone. Designate those corridors shown on the Habitat Areas and Water Resources Overlay and any other riparian area as sensitive habitats requiring protection, except for manmade irrigation ponds over 2,500 square feet surface area.

3-9 Permitted Uses in Riparian Corridors

(a) Within corridors, permit only the following uses: (1) education and research, (2) consumptive uses as provided for in the Fish and Game Code and Title 14 of the California Administrative Code, (3) fish and wildlife management activities, (4) trails and scenic overlooks on public land(s), and (5) necessary water supply projects.

(b) When no feasible or practicable alternative exists, permit the following uses: (1) stream-dependent aquaculture provided that non-stream-dependent facilities locate outside of corridor, (2) flood control projects where no other method for protecting existing structures in the flood plain is feasible and where such protection is necessary for public safety or to protect existing development, (3) bridges when supports are not in significant conflict with corridor resources, (4) pipelines and storm water runoff facilities, (5) improvement, repair or maintenance of roadways or road crossings, (6) agricultural uses, provided no existing riparian vegetation is removed, and no soil is allowed to enter stream channels.

3-10 Performance Standard in Riparian Corridors

(a) Require development permitted in corridors to: (1) minimize removal of vegetation, (2) minimize land exposure during construction and use temporary vegetation or mulching to protect critical areas, (3) minimize erosion, sedimentation, and runoff by appropriately grading and replanting modified areas, (4) use only adapted native or non-invasive exotic plant species when replanting, (5) provide sufficient passage for native and anadromous fish as specified by the State Department of Fish and Game, (6) minimize adverse effects of waste water discharges and entrainment, (7) prevent depletion of groundwater supplies and substantial interference with surface and subsurface waterflows, (8) encourage waste water reclamation, (9) maintain natural vegetation buffer areas that protect riparian habitats, and (10) minimize alteration of natural streams.

3-11 Establishment of Buffer Zones

(a) On both sides of riparian corridors, from the "limit of riparian vegetation," extend buffer zones 50 feet outward for perennial streams and 30 feet outward for intermittent streams.

(b) Where no riparian vegetation exists along both sides of riparian corridors, extend buffer zones 50 feet from the bank edge for perennial streams and 30 feet from the midpoint of intermittent streams.

(c) Along lakes, ponds, and other wet areas, extend buffer zones 100 feet from the high water point, except for man-made ponds and reservoirs used for agricultural purposes for which no buffer zone is designated.

3-12 Permitted Uses in Buffer Zones

(a) Within buffer zones, permit only the following uses: (1) uses permitted in riparian corridors, (2) structures on existing legal building sites, set back 20 feet from the limit of riparian vegetation, only if no feasible alternative exists, and only if no other building site on the parcel exists, (3) crop growing and grazing consistent with Policy 3-9, (4) timbering in "streamside corridors" as defined and controlled by State and County regulations for timber harvesting, and (5) no new parcels shall be created whose only building site is in the buffer area except for parcels created in compliance with Policies 3-3, 3-4, and 3-5 if consistent with existing development in the area and if building sites are set back 20 feet from the limit of riparian vegetation or if no vegetation 20 feet from the bank edge of a perennial and 20 feet from the midpoint of an intermittent stream.

3-13 Performance Standards in Buffer Zone

(a) Require uses permitted in buffer zones to: (1) minimize removal of vegetation, (2) conform to natural topography to minimize erosion potential, (3) make provisions to (i.e. catch basins) to keep runoff and sedimentation from exceeding pre-development levels, (4) replant where appropriate with native and non-invasive exotics, (5) prevent discharge of toxic substances, such as fertilizers and pesticides, into the riparian corridor, (6) remove vegetation in or adjacent to man-made agricultural ponds if the life of the pond is endangered, (7) allow dredging in or adjacent to man-made ponds if the San Mateo County Resource Conservation District certifies that siltation imperils continued use of the pond for agricultural water storage and supply.

Attachment 2

STREAM BANK AND BANK EDGE

The bank of a stream shall be defined as the relatively permanent elevation or acclivity at the outer line of the stream corridor which separates the bed from adjacent upland, whether valley or hill, and serves to confine the water within the bed and to preserve the course of the stream. The bank edge is the upper termination of the bank. In areas where a stream has no discernible bank, the boundary shall be measured from the line closest to the stream where riparian vegetation is permanently established. The bank edge generally defines an area of posltive drainage perpendicular to the stream.

BLUFF AND FOREDUNE EDGE

The bluff edge shall be defined as the upper termination of a bluff, cliff or seacliff. The foredune edge shall be defined as the seaward edge of the dune closest to the sea.

RIPARIAN AREA

The Local Coastal Plan defines riparian area as any area of land bordering a stream, including its banks. It includes land at least up to the highest point (in cross-section) of an obvious channel or enclosure of a body of water. Such areas extend to the outer edge of appropriate indicator plant species (see Riparian Vegetation).

RIPARIAN VEGETATION

Riparian vegetation requires or tolerates soil moisture levels in excess of that available in adjacent terrestrial areas, and is typically associated with the banks, edges or terrestrial limits of freshwater bodies, watercourses and surface emergent aquafers. Riparian vegetation can be distinguished from adjacent upland vegetation as it forms a visually distinct and structurally separate linear plant assemblage along the shoreline of waterways. Vegetation shall be considered to be riparian if at least 50% of the cover in an area is made up of riparian species.

The following are species commonly found in San Mateo County riparian areas: (1) California cordgrass, (2) Red alder, (3) Jaumea, (4) Pickleweed, (5) Big leaf maple, (6) Narrowleaf cattail, (7) Arroyo willow, (8) Broadleaf cattail, (9) Horsetail, (10) Creek dogwood, (11) Black cottonwood, and (12) Box elder.

WETLAND

For San Mateo County, it is appropriate to adapt the definition of wetland used by the U. S. Fish and Wildlife Service (Classification of Wetlands and Deep-Water Habitats of the United States, (1977). This definition embraces several important concepts which are relevant to the San Mateo Coast: (1) the relationship of the water table with respect to the ground surface; (2) the duration of the water on or at the surface; (3) the soil types involved with the permanent or temporary saturated conditions; and (4) the flora and fauna adapted to the wet conditions.

The most important feature which acts as a common denominator is the soil as indicated in Item 3, above. As a result of the above considerations, the Local Coastal Plan adopts the followng U S. Fish and Wildlife Service definition of wetland:

Wetland is an area where the water table is at, near, or above the land surface long enough to bring about the formation of hydric soils or to support the growth of plants which normally are found to grow in water or wet ground. Such wetlands can include mudflats (barren of vegetation), marshes, and swamps. Such wetlands can be either fresh or saltwater, along streams (riparian), in tidally influenced areas (near the ocean and usually below extreme high water of spring tides), marginal to lakes, ponds, and man-made impoundments. Wetlands do not include areas which in normal rainfall years are permanently submerged (streams, lakes, ponds and impoundments), nor marine or estuarine areas below extreme low water of spring tides, nor vernally wet areas where the soils are not hydric.

APPENDIX B: LAND USE DESIGNATIONS

The following definitions describe the principal permitted uses for each land use designation indicated on the Land Use Plan Map (see also the discussion in Sections 2, 8, and 9).

RESIDENTIAL

Density is the primary parameter by which residential land uses are defined. Density is used to describe the number of dwelling units permitted per acre of land over a relatively large area so designated. Zoning will prescribe such densities either in terms of the number of dwelling units permitted on a lot of a given size or, in the case of a Planned Unit Development, the number of total units permitted in the entire development so designated. Within areas designated for residential development, the principal permitted uses may include dwellings, public and private open space, and accessory buildings. Conditionally permitted uses may

Attachment 3

Eleanor Wittrup
657 Terrace Avenue
Half Moon Bay, CA 94019

Mr. Dixon
California Coastal Commission
45 Freemont Street, Suite 2000
San Francisco, CA 94105

September 25, 1999

Dear Mr. Dixon,

I am writing to respond to the *Biological Resources Report on Pacific Ridge at Half Moon Bay*, dated June 15, 1999. It contains numerous inaccuracies and significant errors in logic and judgment which, no doubt, you have already noted, but for the record, the public is noting them as well. The errors fall into three categories: 1) Methodological errors e.g., making judgments about what are and are not wetlands *before* determining whether they fit the definition. 2) Errors in reporting/interpreting the law 3) Errors of omission/ignoring evidence.

As a side note, it is oddly titled, as what it is is a new wetland delineation and an attempt to dismiss sworn testimony. It is not a biological report - that implies a thorough-going analysis of the ecology of the site which they did not do.

ASSUMPTION OF KNOWLEDGE BEFORE STUDY:

First, while its purpose is to *determine* which areas are wetlands according to the Local Coastal Plan (LCP) of Half Moon Bay(HMB), the authors seem to have determined in advance of looking at the evidence which areas are and are not wetlands. For example, the author states:

"The freshwater marshes and seasonal wetlands located on the northern end of the property are primarily dominated...." on p. 3.

This is before any data or analysis is given. In the section recounting the analysis and results:

"Due to the soil's high water-holding capacity and poor drainage in some areas, much of the soil throughout the project site, including non-wetland areas...." on. p. 15.

How are they deciding what is a non-wetland area? This statement is made to justify an alteration in the criteria! On pages 12-3 the methodology is reviewed. Apparently they visited the site during the dry season, when cattle have been regularly grazing the vegetation, and decided on the basis of this visit, some aerial photographs also taken during the dry season (some of which are black and white and so only partially helpful) and the Corps of Engineers wetland maps which areas to test to see if they might be wetland. No mention is made of the criteria they

used in selecting these area. Each of their sources are limited in their ability to uncover *new* wetland areas:

1) The Corps of Engineers requires that an area meet three criteria to be wetland, the Half Moon Bay Local Coastal Plan only requires one of these criteria be met. Using this map thus will not help discover any *new* wetland areas. Also, if one were to use the Corps research, why not just get their initial data where *all* the criteria are individually mapped?

2) No doubt people practiced in this area can tell a lot from aerial photographs, and some types of wetland show up quite well. I am not sure how much one can tell about whether or not wetlands occur on a site when it is actively under cultivation. It is even less clear how helpful black and white photos are in this respect. Finally, it is not clear to me whether looking exclusively at photos taken in the dry season (when what we are trying to find is seasonal inundation) is the best method. Why not look at photo's year round to try to understand the whole cycle of the local ecology?

3) Looking for particular vegetation when an area is regularly grazed can be difficult. I do not know what kind of vegetation these cattle prefer, but it may be that some local wetland indicator species are a favored forage, in which case they would be absent to a one day casual survey. In addition, there may well be types of wetland plants which are dormant during the dry season, but which will grow vigorously when the rains return. Since they are only allowed to grade during the summer months, and their window for this year has about passed, why not do a true vegetation survey when one would expect to find the appropriate vegetation - during the rainy season?

In short, the survey was not done in a systematic, objective, scientifically credible way because the results seem to have been decided upon before the data was gathered. The method seems to have been: guess which areas are wetland, and test only them. In a true scientific survey one does not draw the conclusion before having obtained the evidence, nor does one begin by assuming one's hypothesis is true and then conducting only those tests most likely to confirm them. Serious science puts its hypotheses to rigorous tests, conducting the tests first that the hypothesis is most likely to fail, and then rigidly adhering to the standards of evidence set out at the beginning of the process. This survey certainly does not conform to that method.

On the methodological basis alone this survey would be inadequate, but there are more problems that are worth pointing out so that the applicant can get a survey done correctly.

DEFINITIONS OF WETLAND:

The second problem with this report is that it gets the relevant definition wrong. The authors review various definitions of wetlands. Why they go to this trouble is not at all clear, and it is a bit confusing. The only definition relevant to my appeal is the Coastal Act definition, and the Half Moon Bay LCP definition. The author seriously errs when he reports the HMB LCP "adopts the United States, Fish and Wildlife Service (FWS) definition..." implying that the definition is the one quoted in the report. If you refer to the cited page (LCP Appendix A, pg. 235) what it actually says is that it "adapts" the FWS definition, making it more inclusive. The

change of an "a" to an "o" may seem minor, but in this case it is a serious error. In addition, the change makes no sense if the cited sentence is read in context. The scope of the error is apparent if one reads the cited text. The text of the HMB LCP reads as follows:

> "For San Mateo County, it is appropriate to *adapt* the definition of wetland used by the U.S. Fish and Wildlife Service (Classification of Wetlands and Deep-Water Habitats of the United States, (1977). This definition embraces several important concepts which are relevant to the San Mateo Coast: (1) the relationship of the water table with respect to the ground surface; (2) the duration of the water on or at the surface; (3) the soil types involved with the permanent or temporary saturated conditions; and (4) the flora and fauna adapted to the wet conditions.

The most important feature which acts as a common denominator is the soil as indicated in Item 3, above. As a result of the above considerations, the Local Coastal Plan *adopts the following* U.S. Fish and Wildlife Service definition of wetland:

> *Wetland is an area where the water table is at, or near, or above the land surface long enough to bring about the formation of hydric soils or to support the growth of plants which normally are found to grow in water or wet ground.* Such wetlands can include mudflats (barren of vegetation), marshes, and swamps. Such wetlands can be either fresh or saltwater, *along streams* (riparian), in tidally influenced areas (near the ocean and usually below extreme high water of spring tides), marginal to lakes, ponds, and *man-made impoundments*. Wetlands do not include areas which in normal rainfall years are permanently submerged (streams, lakes, ponds and impoundments), nor marine or estuarine areas below extreme low water of spring tides, *nor vernally wet areas where the soils are not hydric."* [emphasis added]

This is not the FWS definition quoted in the report. As you can see, the LCP requires only one of two conditions to be met. If there are plants "normally found to grow in water or wet ground" or "formation of hydric soils" (either will do) the area is a wetland according to the LCP. This definition supersedes that of USFWS as is indicated on their permit, and that of the Corps of Engineers 404 permit.

Having cited the wrong definition, the author then tries to change the definition they have cited. On page 8 the author, assuming the quoted FWS regulation is the correct one, views wetlands as a "transition between terrestrial and aquatic system" thus they can only occur around a body of water. To be clear let us call these sorts of wetlands: wetland_t. Let us refer to LCP wetlands as: wetland_{LCP}. The trick of defining a wetland_t is to figure out where the transitional area ends. To determine this line the author then imports the UCSACE criteria to distinguish wetland_t and upland areas. What this distinction has to do with applying the LCP definition is not clear. Where the hydric soils or wetland vegetation stop is where the edge of the wetland is according to the LCP definition, which supersedes that of the Corps or Fish and Wildlife. Wetland_{LCP} is not the same as wetland_t, but that is the only thing they looked for.

Alteration of Criteria: Vegetation

Having chosen the wrong criteria, the author of the report then goes on to alter the criteria he cites. Beginning on page 9 the author starts revising the criteria. First he revises the test for vegetation. "For the Pacific Ridge assessment, a *dominance of plants in the obligate and facultative wetland categories* as defined by Reed (1988) were *generally considered* [?] to be positive indicators of wetland. Facultative species were identified as wetland plants *if hydric soils or wetland hydrology was present.*" It is my understanding that FWS understands these terms rather differently. If there is an obligate plant then the area is a wetland, that is why they are called "obligate." Since they almost without exception occur in wetlands if the species is there then it is almost certainly a wetland. It is not necessary for there to be a dominance of such plants. If there are facultative wetland species, again the presumption is that it is a wetland, hydric soils or no. Certainly this is the view in the HMB LCP, it sets no such test for classifying a species as facultative or not according to the soil it is growing in. The author, on his own authority has significantly raised the bar, and in so doing has abandoned the law as written.

The LCP says only that the area must "*...support the growth of plants which normally are found to grow in water or wet ground...*" "Normally found" is not defined, but let us guess that means at least half the time. This covers the Obligate, Facultative Wetland, and Facultative, categories. ("Facultative (FAC). Equally likely to occur in wetlands or non-wetlands (estimated probability 34% to 66%)." p.9 of Biological Resources Report.) Thus their requirement of a dominance of such species is not in keeping with the law.

Alteration of Criteria: Soils

The second criteria revised is that having to do with soils. The author cites but does not quote a standard according to which soils are judged hydric. Instead the author states the following will be their definition:

> "The San Mateo County Soil Survey describes soils on the Pacific Ridge property that are naturally very dark, thus low soil chroma was not considered a strong hydric indicator for the purposes of this study. Soils were identified as hydric if accompanied by stronger, consistent hydric indicators such as mottling, rhizospheres, or gleying."

Are wetland soils are unnaturally dark? Again we see the author's assumptions about what is and is not wetland creeping into the analysis. Because the author *assumes* the majority of the property is not wetland, he sees fit to alter the defining characteristics of a hydric soil, though he cites no authority for doing so. The proper purpose of a wetland survey is to apply the criteria objectively and see which areas fall out to be wetland. The author seems to have gotten the task backward, he seems to thing the point is to justify his own view about what are and are not wetland areas by tinkering with the criteria. No mention is made after this point of either mottling or gleying. One cannot know whether these features were simply absent or just not

looked for. On p.11 the author cites a number of "Corps procedures...to assess wetland hydrology." The notable thing about this passage is that none of the Corps procedures mentioned seem to be the ones which the study reports were employed!

ALLEGEDLY WET AREAS WHICH DO NOT COUNT AS WETLAND:

In the case of riparian habitats the author cites a Coastal Act policy which distinguishes between a riparian area and a wetland. But read the LCP definition again, it specifically includes riparian areas which fit the criteria of wetland$_{LCP}$.

> Such wetlands can be either fresh or saltwater, *along streams* (riparian), in tidally influenced areas (near the ocean and usually below extreme high water of spring tides), marginal to lakes, ponds, and *man-made impoundments*.

So riparian areas can be counted as wetland provided they meet one of the two criteria. It is worthwhile to bring up the pond on the site as well. The CCC, USFWS and California Fish and Game have both determined that the pond is a habitat area, despite the fact that it was originally a man-made feature. The definition of wetland in the HMB LCP is the one at issue. I suspect the author was looking at LUP Policy 3-11 which establishes setbacks for wetlands "except for man-made ponds and reservoirs used for agricultural purposes." This exemption was clearly designed to help farmers who wished to build cattle ponds, and to help them keep using the ponds they already had without violating the law. But the pond is not now used for agricultural purposes, and is not planned to be used for agricultural purposes in the development as planned.

There may be an apparent conflict between our LCP treatment of agricultural ponds and some California Code of Regulations definitions and exemptions. Both the Coastal Act and our LCP contain policies which govern the resolution of these sorts of conflicts. Both say that the "policy most protective of coastal resources shall take precedence." Clearly protecting the wetlands around the pond is more protective of coastal resources than not protecting it.

If one looks at the maps on the original reconnaissance reports (Vol. III of the Administrative Record produced by the City), the hydrology maps, the geotechnical map (all attached) reads the Dykstra Ranch section of the LCP, and attends to both the spirit and the letter of the law it is clear that there are lots of wetlands on this site, and that any residential development (since it is not resource dependent) must be very cleverly designed and built. The development as proposed was clearly not designed with the purpose of maximally protecting the environmental resources of the site. I urge you to reject this new report, and turn down the permit.

Sincerely,

Eleanor Wittrup

Eleanor Wittrup

Attachment 4

A. That approval by the United States Army Corps of Engineers is required for any activities involving the streams and drainage courses;

B. Each development phase will require consultation with the California Department of Fish and Game to insure that the streams and habitats are adequately protected. A 1601 Permit issued by the Department of Fish an Game maybe required for each phase of the development;

C. That the discharge of any swimming pool water or any other materials into any of the creeks, streams, drainage courses, or the lake is strictly prohibited;

D. That the proposed check dams in the intermittent creek channels shall be approved by the Department of Fish and Game and Army Corps of Engineers. The existing dense vegetation shall be preserved to the maximum extent practicable. Any required thinning of the existing vegetation shall be kept to a minimum in order to reduce potential erosion of the stream banks.

18.16.055 Preservation of the Pond.

A. The following policies, programs, and requirements shall be conformed with at all times

1. The existing agricultural pond shall be retained and upgraded as a visual amenity and wildlife habitat;

2. Swimming, boating, fishing, and any other form of contact or non-contract activity on or in the lake is strictly prohibited;

3. Life safety and emergency equipment, including an emergency telephone shall be installed and maintained adjacent to the lake at a location approved by the Police Chief and Fire Chief;

4. That all areas of the pond that are less than four feet in depth shall be lined with either a gas permeable membrane, concrete, cemented cobbles, or other material approved by the Department of Fish and Game and Army Corps of Engineers that will prevent aquatic plants from rooting on the pond bottom;

5. That in order to limit the amount of nutrients entering the pond, a slight trough shall be constructed around the perimeter. Surface runoff shall be collected in this trough and routed to the approved storm drain system;

Attachment 5

STATE OF CALIFORNIA GEORGE DEUKMEJIAN, Governor

CALIFORNIA COASTAL COMMISSION
CENTRAL COAST DISTRICT
1 OCEAN STREET, ROOM 310
NTA CRUZ, CA 95060
) 426-7390

JUL 1988
PLANNING DEPT.
HALF MOON BAY

July 8,1988

Ms. Kerry Burke
Planning Director
City of Half Moon Bay
P.O. Box 67 501 Main St.
Halfmoon bay CA. 94019

RE: SCH# 88020216

This letter is a response to the Draft Environmental Impact Report which was prepared for a development proposal for Dykstra Ranch. The proposed project is to develop 114+ acres with 228 single family residences. The property as it now exists, consists mainly of cultivated and pasture land. There is a 1.6 acre stock pond which supports a wetland habitat and a seasonal wet meadow. There are three intermittent and two ephemeral streams on the property, with associated wetland and riparian corridors. The stock pond is created by the impoundment of the northernmost of the seasonal streams. Implementation of the proposed project would change the character of the stock pond and eliminate all of the wetland habitat. Water is expected to be provided by Coastside Community Water District, upon completion of the Crystal Springs Pipeline. Sewage from the project is to be accommodated by the improvement and expansion of the existing sewage treatment plant planned for 1992. The proposed project omits any local street connections except for a gated entrance at Highway 92.

The central issues of the DEIR that this response will address are those of the projects impacts upon traffic, wetland and riparian habitats, water and sewage, and the analysis of the project alternatives.

The Land Use Plan (LUP) as certified by the Coastal Commission in 1985, for the City of Half Moon Bay calls for the connection of Foothill Blvd. (which will serve as the main thoroughfare for the project), to Grandview Blvd. and to Foster Drive, existing local streets adjacent to the property. The intended purpose of these connections is to relieve some of the traffic congestion on Highway 92 at peak commuter hours, by diverting Highway 1 bound traffic onto local streets. The Level of Service (LOS) of any roadway is primarily determined by the affect of its intersections, the intersection of Highway 92 and Highway 1 is a key bottleneck in Half Moon Bay traffic circulation. The aim of the LUP is that north or south bound commuters from the project would have direct access to Highway 1 without exacerbating the present situation at the intersecton of HWY 92/HWY 1.

STATE OF CALIFORNIA GEORGE DEUKMEJIAN Governor

CALIFORNIA COASTAL COMMISSION
CENTRAL COAST DISTRICT
701 OCEAN STREET, ROOM 310
SANTA CRUZ, CA 95060
(408) 426-7390

Three alternatives are discussed in the DEIR. The first describes no local street connections to Foothill Blvd., with a gated entrance at Foothill Blvd. and Highway 92. The second describes one local connection, with Foothill Blvd. connecting to Silver Street. The third incorporates two local street connections at both Silver Street and Grandview Blvd. The first alternative is the least favorable because it is contrary to the Half Moon Bay LUP and it does not provide adequate mitigation for traffic impacts upon Highway 92 and the intersection of Highway 92 and Highway 1.

The third alternative altough not fully consistent with the certified LUP, is the most desirable in that it fulfills the intended character of Foothill Blvd. as an arterial roadway by providing two local street connections at Grandview and Silver Street. (the LUP calls for a Foothill Connection to Grandview and Foster). These connections will serve the function of providing an alternate route for traffic from the project to Highway 1.

The main biological features of the property are associated with its surface water. There are five streams and one pond on the property. Associated with the pond is a wetland habitat and a wet meadow. The treatment of these areas under the proposed project is the next area of concern to staff. The proposed development envisions the stock pond as being "renovated" so as to be an "aesthetic or ornamental feature" rather than "being managed to optimize its recreational or biological values". The wetland habitat would be "eliminated" and the bottom of the pond would be sealed with concrete or cobble stones to prevent any plant life from growing. This is an unacceptable treatment of a sensitive habitat under section 30231 of the California Coastal Act.

The Coastal Commission considers a habitat inherently valuable regardless of whether it is "natural" or "man made". A natural biotic community will flourish wherever it is allowed. Such is the case with the stock pond and wetlands on the Dykstra Ranch property, as evidenced by the wide variety of plant and animal life which was found in the biotic survey of the property. Among those organims observed which are dependent upon a wetland or open fresh water habitat are; the great blue heron, green heron, mallard duck, american coot, killdeer, five species of rush, umbrella-sedge, cat tail, knotweed, brass-buttons, california newt, bullfrog, garter snake, and blue gill. In addition the wetland area is potential habitat for the endangered San Francisco garter snake. Although no San Francisco garter snakes were observed on the property, according to the DEIR the wetland area could support a population, and in all likelyhood eventually will if given the oppurtunity. This speaks to a recurrant environmental problem, namely that protecting the species is not enough, the species needs a habitat as well.

For these reasons Coastal Commission staff views the pond and associated wetland habitat as a valuable resource. That should be preserved and perhaps incorporated into the project as a preserve or parkland area where residents can partake in passive recreational uses. The pond and associated natural areas and habitats can easily be designed into a project as an aesthetic and environmental asset, eliminating the natural biologic function of the pond and environs is not necessary and not consistent with the Coastal Act.

The seasonal and ephemeral streams on the property support riparian woodland habitats. The DEIR states that several of the housing units are not in compliance with required setbacks for development adjacent to riparian corridors. And as such there may be negative impacts from the activity of property owners (vegatation removal, ground disturbance). Suggested mitigation to the effect of property owners on riparian habitat would be to restrict the property owners from any vegatation removal or soil disturbance within 30 feet of the edge of riparian vegetation by use of Homeowners Association Codes and Ristrictions. Staff suggests that in addition property ownwers be informed as to the character of riparian vegetation so that they may identify it, and to the value of riparian vegetation as a habitat resource. In addition property owners should be informed about the harmful effect of draining swimming pools into natural waterways or storm drains.

The setbacks established in the City's LUP for riparian area are minimum, serious consideration should be given to increasing the setbacks as necessary to permantly protect the stream and habitat. Additional standards such as fences, deed ristrictions , open space corridor dedications, and public agency maintenance of the riparian corridors (by the city's parks district, etc.)should be established.

The DEIR proposes that the stream channels should be deepened, cleaned, and a number of check dams built to provide better drainage, this activity would require a Coastal Development Permit and a 1601 permit from the Department of Fish and Game. Coastal Commission staff recomends that no construction occur within the riparian corridors or buffer areas during winter months (October to April) to avoid increased sedimentation.

CALIFORNIA COASTAL COMMISSION
CENTRAL COAST DISTRICT
OCEAN STREET, ROOM 310
TA CRUZ, CA 95060
(408) 426-7390

It is acknowleded in the DEIR that at present there are insufficient water and sewage facilities to accomadate the proposed project. Water is expected to be provided upon completion of the Crystal Springs Pipeline project. The DEIR suggests that this water will be available in 1989 or 1990. The lateset estimates available to Coastal Commission staff indicate that water from the Crystal Springs project will not be available until 1992 at the earliest (CCWD). The actual timing of water availibility must be taken into account before construction should begin. Staff feels that construction should not begin until appropriate CCWD connections are assured. Similarly the timing of the improvement and expansion of the sewage treatment plant must be completed before any approvals can be allowed. As stated in the DEIR, it is appropriate to time the start of this (and any major) project to the completion of capacity improvements to the water and sewage treatment facilities.

The last area of concern is the analysis of the development alternatives presented in the DEIR. The criteria for analysis of development alternatives takes into account these issues, site design choices, number and character of residential units, amount and use of open space, treatment of wetland and riparian areas, and impact/ mitigation for traffic on streets and highways. The determination of an "environmentally superior" alternative under CEQA guidelines, is based upon the extent of grading required, extent of impacts on riparian and wetland areas, and traffic impacts. These are not neccessarally the standards by which the developer will consider when deciding his or her preference for a particular alternative. In the DEIR all other alternatives (except for the proposed project) are rejected by the developer on the basis of financial feasibility. While it is perfectly acceptable for the developer to have a preference, those agencies reviewing the DEIR should not allow this to influence their decision. In reviewing the alternatives presented in the DEIR Coastal Commission staff has concluded that alternative E is the most environmentally superior project. This alternative incorporates 90 units with a local roadway connection to Silver street as well as the Foothill Blvd. connection to Highway 92. In addition alternative E dedicates the pond area as open space, this situation is ideally suited to the preservation of the wetland habitat, and would provide a valuable local recreation resource.

STATE OF CALIFORNIA GEORGE DEUKMEJIAN, Governor

CALIFORNIA COASTAL COMMISSION
CENTRAL COAST DISTRICT
OCEAN STREET, ROOM 310
..NTA CRUZ, CA 95060
(408) 426-7390

In summary Coastal Commission staff recomends that the proposed Dykstra Ranch project be altered to conform with the roadway requirements of the Half Moon Bay certified LUP, by providing local street connections. That construction of the project not occur until water and sewer services are available to accomadate the project. That the pond and wetland habitat must be preserved. That the riparian habitats must be adequately protected (by incorporating measures beyond those set forth in the DEIR). Finally that serious consideration be given to other development alternatives, as required under the California Environmental Quality Act.

If you have any questions concerning the review of this project please feel free to contact Eric G. Frazier at our office.

Sincerely

ERIC G. FRAZIER

FOR Les Strnad
Chief of Permits.

cc: State Clearinghouse
Department of Fish and Game.

Attachment 6

United States Department of the Interior

FISH AND WILDLIFE SERVICE
Sacramento Fish and Wildlife Office
3310 El Camino Avenue, Suite 130
Sacramento, California 95821-6340

IN REPLY REFER TO:
1-1-98-F-78

November 16, 1998

Mr. Calvin C. Fong
Chief, Regulatory Branch
(Attn.: Mark D'Avignon)
U.S. Army Corps of Engineers
San Francisco District
333 Market Street
San Francisco, California 94105-2197

Subject: Formal Consultation on the Proposed Pacific Ridge Development Project, Half Moon Bay, San Mateo County, California (PCN 23053S).

Dear Mr. Fong:

This document transmits the U.S. Fish and Wildlife Service's (Service) biological opinion on the proposed Pacific Ridge housing development project in Half Moon Bay, San Mateo County, and effects of this project on the federally threatened California red-legged frog (*Rana aurora draytonii*) and the federally endangered San Francisco garter snake (*Thamnophis sirtalis tetrataenia*). This biological opinion is provided in accordance with section 7 of the Endangered Species Act of 1973, as amended (16 U.S.C. 1531 et seq.) (Act). Your March 17, 1998, request to initiate consultation was received in our office on March 20, 1998.

This biological opinion is based on information provided in: (1) the August 20, 1997, site assessment and survey results for California red-legged frogs at Dykstra Ranch by Resource Management Inc. (RMI); (2) the November 26, 1997, correspondence from Mike Westphal of my staff to Timothy Lacy of RMI; (3) the December 1997, *Pacific Ridge at Half Moon Bay Wetland Mitigation and Monitoring Plan*, by RMI; (4) the March 26, 1998, site visit with Steve Foreman of RMI, Bob Henry of Atlanto Properties, and Dan Buford and Curt McCasland of my staff, (5) the May 26, 1998, correspondence from Steve Foreman of LSA (formerly of RMI) to Dan Buford of my staff, (6) the July 27, 1998, correspondence from LSA to Curt McCasland of my staff; and (7) the October 2, 1998, correspondence from LSA to Curt McCasland. No biological assessment was provided for this project. A complete administrative record of this consultation is on file in the Sacramento Fish and Wildlife Office.

CONSULTATION HISTORY

On August 20, 1997, Tim Lacey of RMI sent to the Service the results of a site assessment and California red-legged frog survey for the Dykstra Ranch Property in Half Moon Bay. In this correspondence RMI requested technical assistance from the Service to determine if any additional information was required in order to make a determination regarding the presence of California red-legged frogs on the site. On November 26, 1997, the Service responded in writing to RMI's letter stating that the site likely provides habitat for California red-legged frogs and potential habitat for San Francisco garter snakes. This determination was based on the presence of vegetated water bodies on the site, the widespread distribution of California red-legged frogs in coastal San Mateo County, and evidence that San Francisco garter snakes are potentially present at any water body in the Half Moon Bay area that supports emergent vegetation and amphibians. Given the potential impacts to federally listed species, the Service recommended formal consultation pursuant to section 7 of the Act be initiated.

On March 17, 1998, the U.S. Army Corps of Engineers (Corps) initiated formal consultation. On March 26, 1998, Dan Buford and Curt McCasland of my staff met with Steve Forman of RMI (now of LSA) and Bob Henry of Ailanto Properties at the project site to discuss avoidance and minimization measures that could be used to reduce impacts to San Francisco garter snakes and California red-legged frogs. During this field visit, members of my staff were shown two ponds adjacent to the project site that were proposed as mitigation for project impacts. These two ponds were not in the ownership of Ailanto Properties. At this point, my staff explained that the size of the project still represented a significant impact and needed to be scaled back, which included providing a larger buffer distance between the proposed development and aquatic habitat and the removal of a proposed public path around the existing stock pond. However, Bob Henry indicated that the project would not be scaled back, but they would continue to pursue the proposed mitigation property. At the end of the meeting, we expressed satisfaction with the proposed mitigation site, but still stressed the need to provide an adequate buffer between the existing habitat and the proposed housing development.

On May 26, 1998, we received a letter from LSA stating that the project proponent had redesigned the project such that 3 lots were eliminated, a larger buffer area was placed around the onsite stock pond, and the size of movement corridors between drainages were increased. In addition, this correspondence indicated that the path would not be eliminated, and the proposed mitigation property could not be purchased. Based on this letter and a small project map sent with the letter, it was assumed that the project proponent had redesigned the project to provide adequate buffers around the pond and drainages as requested by my staff. During several phone calls between Curt McCasland of my staff and Steve Foreman, it was agreed that the project proponent would place money into a mitigation fund which would be used to purchase approximately 10 acres of California red-legged frog and San Francisco garter snake habitat based upon 5 acres of impacts at a 2:1 ratio, and the proposed path would be only used as emergency vehicle access. This offsite mitigation, in conjunction with the perceived project avoidance measures, was considered acceptable by my staff. On August 31, 1998, we received a map of the proposed project, which delineated back lot lines within 50 feet of the pond and all of

the drainages. Within the May 26, 1998, letter from LSA, the buffer distances were described as being a minimum of 100 feet in width, however, this distance incorporated the back yards of the proposed lots within the determination of the buffer distance, a method that was never agreed upon by members of my staff. Upon receiving the August 31, 1998, project map, and reviewing the May 26, 1998, letter, Curt McCasland contacted Steve Foreman and discussed our continued concerns over the buffer distances provided for aquatic habitats and stated that the proposed distances were not acceptable.

On October 2, 1998, we received a letter from LSA summarizing the project proponents' final mitigation offer. This included the establishment of environmentally sensitive areas (ESAs) around portions of the property including the existing stock pond and drainages, as well as an assessment of 2.7 acres of impacts to upland habitat associated with inadequate buffer size (this value of 2.7 acres differs from the approximately 5 acres of impact provided in earlier conversations). Finally, on October 7, 1998, we received a letter from LSA relating to outstanding issues, specifically the inadequacies of the existing buffer zone and the proposed public path. Mr. Foreman asserted that the project proponent has provided the maximum practicable avoidance and setbacks from the pond, and that their proposal for providing funding for acquisition of off-site habitat is in recognition of the potential impacts associated with the reduction in the desired buffer habitat widths. He further stated the proposed path would be placed at the back of the housing lots and reduced in width.

BIOLOGICAL OPINION

Description of the Proposed Action

Ailanto Properties is proposing to construct 213 lots on approximately 114 acres within the Pacific Ridge at Half Moon Bay development, in Half Moon Bay, San Mateo County. The proposed project is located within the city limits of Half Moon Bay, approximately 1 mile north of Highway 1 and approximately 1 mile east of the Pacific Ocean. The project site is bordered to the west by urban development, and to the north, south, and east by undeveloped open space. The uplands on the project site are primarily non-native annual grassland. Several ponds, springs, and drainages are present within one square mile of the project area. The project will include the construction of homes, roadways, and related utilities. The project proponent has proposed to fill 43,560 square feet (1.0 acre) of jurisdictional wetland and other waters of the United States and to develop land within 300 feet of both sides of several unnamed drainages and two ponds, which will result in the direct loss of riparian and upland habitat suitable for California red-legged frogs and San Francisco garter snakes.

The project proponent has proposed several measures to offset the adverse effects of the project on California red-legged frogs and San Francisco garter snakes. These measures include minimizing impacts by preserving and enhancing habitat for California red-legged frogs, as well as offsite activities. The loss of 1.0 acre of wetlands would be minimized by the onsite creation of 2.1 acres of wetlands. The residential areas will be clustered into distinct neighborhoods and

an integrated system of open space will separate the neighborhoods. The upper hillsides and existing agricultural pond will be preserved and kept as wildlife habitat and an arched culvert with a native soil substrate will be used to ensure that an unimpeded path will exist between the preserved pond onsite and the two agricultural ponds to the north. Approximately 90 percent of the housing lots will be only rough graded and existing contours will be used to create a natural effect. For the rough graded lots, a drill rig will drill 10-foot deep, 12-inch diameter holes in which concrete will be poured for piers to support the housing foundations. The undeveloped portions of the lots surrounding the existing agricultural pond (lots 147-156, 189-197, and 204-207), along drainage 4 (lots 156-158, 166-167, 189, and 120-122), the upper portions of drainage 3 (lots 83-85 and 113-115), and the knoll northwest of the existing agricultural pond (lots 198-203) will be legally established as environmentally sensitive areas (ESAs), which can be legally established as deed restrictions under the existing City of Half Moon Bay zoning code for this development project. In the designated ESAs, the ordinance prohibits all land from alteration, vegetation or soil removal, and introduced landscaping.

The project proponent has also proposed to create 2.1 acres of wetlands onsite which includes wet meadow areas and intermittent stream courses. Coastal scrub vegetation will also be planted around the pond, and a bullfrog (*Rana catesbeiana*) control program will be developed to eradicate bullfrogs from the existing stock pond. This plan will be coordinated with the Service and California Department of Fish and Game, and will include the removal and eradication of bullfrogs, and biennial draining of the pond. Preconstruction surveys will also be conducted by a qualified wildlife biologist with field experience in surveying both California red-legged frogs and San Francisco garter snakes. Training of all construction workers will be conducted by a qualified biologist with knowledge of both species. Each worker will also be provided with a brochure that summarizes the information and be used as a future reference.

Species Account

San Francisco garter snake

The San Francisco garter snake was listed as a Federal endangered species in March 1967 (32 FR 4001). The garter snake is an extremely colorful snake. It is identified by a burnt-orange head, yellow to a greenish-yellow dorsal stripe edged in black, and its red lateral stripe which may be continuous or broken with black blotches and edged in black. The belly color varies from greenish-blue to blue. Large adults can reach three feet in length.

The garter snakes' preferred habitat is a densely vegetated pond near an open hillside where it can sun itself, feed, and find cover in rodent burrows. They are extremely shy, difficult to locate and capture, and quick to flee to water or cover when disturbed. Adult snakes may seek cover in rodent burrows during summer months when ponds may dry. On the coast snakes hibernate during the winter, but further inland, if the weather is suitable, snakes may be active year round. Although highly vagile, adults spend considerable time after emergence in their hibernacula. They have been seen breeding at entrances to these burrows shortly after emergence from hibernation (Keel, pers. comm.) and may spend the majority of each day during the active season

in the same burrows. San Francisco garter snakes breed in the spring or late fall and bear live young from May through October, with an average litter size of 12-18 (Stebbins 1985).

Although primarily a diurnal species, captive snakes housed in an outside enclosure were observed foraging at night on warm evenings. Adult snakes feed primarily on California red-legged frogs, and may also feed on juvenile bullfrogs (*Rana catesbiana*). In laboratory studies, Larsen (1994) fed adult San Francisco garter snakes 2 year old bullfrog tadpoles and found that only the largest adults could eat and digest the tadpoles; smaller adults regurgitated partially digested tadpoles, apparently unable to fully digest them. Larsen (1994) also observed that when these smaller adult snakes were fed bullfrogs and California red-legged frogs of comparable size, they were unable to hold and eat the bullfrogs although they had no trouble with the California red-legged frogs. Newborn and juvenile San Francisco garter snakes depend heavily upon Pacific treefrogs (*Hyla regilla*) as prey (Larsen 1994), and young snakes may not survive if they are unavailable.

Many of the threats that led to the listing of the San Francisco garter snake in 1967 continued to impact the species in 1985 when the Recovery Plan was written. These included loss of habitat from agricultural, commercial and urban development and collection by "reptile fanciers and breeders" (USFWS 1985).

The historical threats to the species remain, but there are now additional threats to the species, such as the documented decline of the California red-legged frog (an essential prey species) and the introduction of bullfrogs into San Francisco garter snake habitat. Bullfrogs are capable of preying on both garter snakes and California red-legged frogs. Extirpation of California red-legged frogs in San Francisco garter snake habitat is likely to cause localized extinction of garter snakes.

California red-legged frog

The California red-legged frog was federally listed as threatened on May 23, 1996, (61 FR 25813) effective June 24, 1996. This species is the largest native frog in the western United States (Wright and Wright 1949), ranging from 4 to 13 centimeters (1.5 to 5.1 inches) in length (Stebbins 1985). The abdomen and hind legs of adults are largely red; the back is characterized by small black flecks and larger irregular dark blotches with indistinct outlines on a brown, gray, olive, or reddish background color. Dorsal spots usually have light centers (Stebbins 1985), and dorsolateral folds are prominent on the back. Larvae (tadpoles) range from 14 to 80 millimeters (0.6 to 3.1 inches) in length, and the background color of the body is dark brown and yellow with darker spots (Storer 1925).

California red-legged frogs have paired vocal sacs and vocalize in air (Hayes and Krempels 1986). Female frogs deposit egg masses on emergent vegetation so that the egg mass floats on the surface of the water (Hayes and Miyamoto 1984). California red-legged frogs breed from November through March with earlier breeding records occurring in southern localities

(Storer 1925). Individuals occurring in coastal drainages are active year-round (Jennings *et al.* 1992), whereas those found in interior sites are normally less active during the cold season.

Adult California red-legged frogs prefer dense, shrubby or emergent riparian vegetation closely associated with deep (>0.7 meter), still, or slow-moving water (Hayes and Jennings 1988). However, frogs also have been found in ephemeral creeks and drainages and in ponds that may or may not have riparian vegetation. The largest densities of California red-legged frogs currently are associated with deep pools with dense stands of overhanging willows and an intermixed fringe of cattails (*Typha latifolia*) (Jennings 1988). California red-legged frogs disperse upstream and downstream of their breeding habitat to forage and seek sheltering habitat. Sheltering habitat for California red-legged frogs includes potentially all aquatic, riparian, and upland areas within the range of the species and any landscape features that provide cover, such as existing animal burrows, boulders or rocks, organic debris such as downed trees or logs, and industrial debris. Agricultural features such as drains, watering troughs, spring boxes, abandoned sheds, or hay ricks may also be used. Incised stream channels with portions narrower than 18 inches and depths greater than 18 inches may also provide important summer sheltering habitat. Accessability to sheltering habitat is essential for the survival of California red-legged frogs within a watershed, and can be a factor limiting frog population numbers and survival. During winter rain events, juvenile and adult California red-legged frogs are known to disperse up to 1-2 km (Rathbun and Holland, unpublished data, cited in Rathbun *et al.* 1991).

Egg masses contain about 2,000 to 5,000 moderate sized (2.0 to 2.8 mm [0.08 to 0.11 inches] in diameter), dark reddish brown eggs and are typically attached to vertical emergent vegetation, such as bulrushes (*Scirpus* spp.) or cattails (Jennings *et al.* 1992). California red-legged frogs are often prolific breeders, laying their eggs during or shortly after large rainfall events in late winter and early spring (Hayes and Miyamoto 1984). Eggs hatch in 6 to 14 days (Jennings 1988). In coastal lagoons, the most significant mortality factor in the pre-hatching stage is water salinity (Jennings *et al.* 1992); eggs exposed to salinity levels greater than 4.5 parts per thousand result in 100% mortality (Jennings and Hayes 1990). Increased siltation during the breeding season can cause asphyxiation of eggs and small larvae. Larvae undergo metamorphosis 3.5 to 7 months after hatching (Storer 1925, Wright and Wright 1949, Jennings and Hayes 1990). Of the various life stages, larvae probably experience the highest mortality rates, with less than 1 percent of eggs laid reaching metamorphosis (Jennings *et al.* 1992). Sexual maturity normally is reached at 3 to 4 years of age (Storer 1925, Jennings and Hayes 1985). California red-legged frogs may live 8 to 10 years (Jennings *et al.* 1992).

The diet of California red-legged frogs is highly variable. Hayes and Tennant (1985) found invertebrates to be the most common food items. Vertebrates, such as Pacific tree frogs (*Hyla regilla*) and California mice (*Peromyscus californicus*), represented over half the prey mass eaten by larger frogs (Hayes and Tennant 1985). Hayes and Tennant (1985) found juvenile frogs to be active diurnally and nocturnally, whereas adult frogs were largely nocturnal. Feeding activity probably occurs along the shoreline and on the surface of the water (Hayes and Tennant 1985). Larvae likely eat algae (Jennings *et al.* 1992).

Several researchers in central California have noted the decline and eventual disappearance of California red-legged frog populations once bullfrogs (*R. catesbeiana*) became established at the same site (L. Hunt, in litt. 1993, S. Barry, in litt. 1992, S. Sweet, in litt. 1993). This has been attributed to both predation and competition. Twedt (1993) documented bullfrog predation of juvenile California red-legged frogs, and suggested that bullfrogs could prey on subadult red-legged frogs as well. In addition to predation, bullfrogs may have a competitive advantage over California red-legged frogs: bullfrogs are larger, possess more generalized food habits (Bury and Whelan 1984), possess an extended breeding season (Storer 1933) where an individual female can produce as many as 20,000 eggs during a breeding season (Emlen 1977), and larvae are unpalatable to predatory fish (Kruse and Francis 1977). In addition to competition, bullfrogs also interfere with California red-legged frog reproduction. California red-legged frogs have been observed in amplexus with (mounted on) both male and female bullfrogs (Jennings and Hayes 1990, Twedt 1993, M. Jennings, in litt.1993, R. Stebbins in litt. 1993). Thus, bullfrogs are able to prey upon and out-compete California red-legged frogs, especially in sub-optimal habitat.

Environmental Baseline

The environmental baseline used in this analysis includes past and ongoing impacts of all Federal, State, Tribal, and private actions and other human activities in the vicinity of the project that have impacted, or are impacting the listed species.

California red-legged frogs have been extirpated or nearly extirpated from over 70 percent of their former range. Historically, this species was found throughout the Central Valley and Sierra Nevada foothills. As of 1996, California red-legged frogs were known to occur in approximately 240 streams or drainages from 23 counties, primarily in central coastal California. Monterey, San Luis Obispo, and Santa Barbara counties support the largest extent of currently occupied habitat. The most secure aggregations of California red-legged frogs are found in aquatic sites that support substantial riparian and aquatic vegetation and lack non-native predators. Several researchers in Central California have noted the decline and eventual local disappearance of California red-legged frogs in systems supporting bullfrogs (Jennings and Hayes 1990, Twedt 1993), red swamp crayfish (*Procambarus clarkii*), signal crayfish (*Pacifastacus leniusculu*), and several species of warm water fish including sunfish (*Lepomis* spp.), goldfish (*Carassius auratus*), common carp (*Cyprinus carpio*), and mosquitofish (*Gambusia affinis*) (L. Hunt, in litt. 1993, S. Barry, in litt. 1992, S. Sweet, in litt. 1993). Habitat loss, non-native species introduction, and urban encroachment are the primary factors that have adversely affected the California red-legged frog throughout its range.

The final rule listing the California red-legged frog as threatened identifies five geographic areas, called recovery units, which the Service considers vital to the conservation and recovery of the species. The project area is within the central Coast Range recovery unit, which extends from San Mateo and Santa Clara counties south to Ventura and Los Angeles counties. This recovery unit is at the core of the remaining distribution of the frog. The project site is located at the base of the Coast Range hills which rise up just east of the property. Large portions of land

surrounding the project area are undeveloped, and support primarily annual grassland and coastal sage scrub. At least 4 ponds, several tributaries, and 2 seeps are found within 1 mile of the project site. Given the numerous water bodies surrounding the project site, it is likely that this habitat is utilized as hydration, dispersal, and breeding habitat. The presence of vegetated water bodies on and adjacent to the project site provides suitable habitat for California red-legged frogs and San Francisco garter snakes.

The Recovery Plan for the San Francisco garter snake (Service 1985) identified six significant populations. These were West of Bayshore (W-O-B), San Francisco State Fish and Game Refuge (Refuge), Laguna Salada (Pacifica), Pescadero Marsh Natural Preserve (Pescadero) and Año Nuevo State Reserve (Año Nuevo) populations, and an isolated population north of Half Moon Bay. Of the six populations existing in 1985, the Pacifica population was heavily impacted in 1989 and is no longer considered significant, four have declined drastically (W-O-B, Refuge, Pescadero and Año Nuevo). The status of the Half Moon Bay population is unknown, however small developments have occurred and ongoing threats such as drawing down agricultural ponds to irrigate croplands, over grazing, the conversion of coastal scrub habitat to agricultural land continue to occur. Furthermore, populations of exotic species such as bullfrogs and exotic fish have been established within the area, likely resulting in the chronic predation of juvenile San Francisco garter snakes as well as the reduction in snake prey items such as California red-legged frogs.

Of the declining populations, the Año Nuevo population appears to have the slowest rate of decline. Recent recovery actions at Año Nuevo may be further slowing the decline of that population. However, current land management practices outside of State park lands are impacting the Año Nuevo population. It is unknown whether or not recovery efforts made by the California State Parks will be sufficient to change the trend in that population.

The Refuge population is found on San Francisco Water Department lands in the area encompassing the Upper and Lower Crystal Springs and San Andreas Reservoirs. This population is highly dispersed throughout the reservoir and is heavily impacted from predation by introduced fishes, reservoir fluctuations and dewatering, bullfrogs, and loss of seasonal wetlands.

The most significant decline in population numbers of San Francisco garter snakes (apart from Pacifica) is the decline of the W-O-B population. Data on this population has shown a dramatic downward trend in numbers over the past several years. Larsen (1994) trapped the population between 1990 and 1992, and detected a possible population decline greater than 70 percent from the 1983 to 1985 population census completed by Wharton (1989). In approximately eight site visits made by the Service from November 1994 to present, one dead garter snake (apparently run over by a vehicle), one paralyzed San Francisco garter snake, and two apparently healthy garter snakes have been found.

One permanent pond and 4 unnamed tributaries are within the project site, and there are at least 3 ponds immediately adjacent to the project site, which provide adequate habitat for both California red-legged frogs and San Francisco garter snakes. One pond lies immediately east of the project site and is hydrologically connected to the onsite pond by an unnamed drainage. The 2 remaining ponds are located immediately to the north of the project site and are within a fenced area that has not been recently grazed. The habitat surrounding these ponds primarily consists of coastal scrub species, and both ponds possess ample amounts of emergent vegetation.

The Environmental Impact Report (EIR) for this project was finalized in 1988, however the project was stalled until the City of Half Moon Bay had sufficient wastewater capacity to accommodate new development. Highway 92, which links Half Moon Bay with the surrounding metropolitan areas of San Mateo and San Francisco counties, is currently being widened. The improvements to the city's wastewater facility and highway improvements will facilitate and expand the amount of development in the Half Moon Bay area.

Effects of the Proposed Action

The proposed preservation and enhancement of onsite habitat as minimization for project impacts is considered part of the project evaluated by the Service in this biological opinion. Any change in these plans or their implementation that might adversely affect listed threatened or endangered species requires reinitiation of consultation with the Service, as set forth in the final paragraphs of this letter.

Currently there is one large perennial pond site at the northern end of the project site. The proposed enhancement and management of the pond, including the planting of scrub species around the pond and eradication of bullfrogs, should increase foraging opportunities and reproductive success of both San Francisco garter snakes and California red-legged frogs. However, the proximity of housing lots and the proposed footpath will be significant new impacts to both California red-legged frogs and San Francisco garter snakes. The potential for contaminated runoff entering this pond will be slightly increased as the pond will be surrounded by development and roads.

Several significant impacts to biological resources from construction of the proposed project are identified. This project will result in a further decrease in the availability of dispersal, foraging, and breeding habitat in the Half Moon Bay area for San Francisco garter snakes and California red-legged frogs. Specifically, insufficient buffer distances between the riparian corridor of the onsite drainages and existing stock pond will likely preclude movement of San Francisco garter snakes and California red-legged frogs to and from adjacent habitats. In addition to blocking dispersal corridors, the project will likely preclude the use of surrounding riparian corridors and adjacent upland habitat due to the proximity of houses. This will reduce the quality of the surrounding habitat as foraging and breeding habitat. Specifically, California red-legged frog and San Francisco garter snake habitat losses include 1.0 acre of wetlands and 2.7 acres of impacts associated with loss of an adequate buffer area between the proposed development and breeding and foraging habitat.

Effects to San Francisco garter snakes and California red-legged frogs include direct effects to individuals and dispersal and breeding habitat that may occur during construction, indirect effects to habitat within the project area and vicinity, and cumulative effects to the local California red-legged frog and San Francisco garter snake populations resulting from the project once build-out occurs.

Direct effects of the project include the potential for harassment, injury and/or mortality of individual adults and juveniles during construction. This includes the risk of incidental take from pre-construction surveys and potential relocation of individuals, crushing of individuals by heavy equipment, and disturbance to habitat from grading and fill activities. The project will result in alteration of dispersal, breeding, and foraging habitat; specifically, 1.0 acre of wetlands and drainages will be filled and 2.7 acres of riparian and adjacent upland habitat will be graded and developed.

The potential for adverse effects is largely restricted to the development of road crossings and inadequate buffers around the existing stock pond and the drainages. However, the species may inhabit any areas that support standing water or are sufficiently moist at the time of construction.

Adverse indirect effects include the potential for sedimentation of stream channels or existing stock ponds as a result of the construction activities. Sedimentation may alter the physical characteristics of the foraging and breeding areas, making them unsuitable for use by either species. Construction activities may interfere with the movement of dispersing California red-legged frogs and San Francisco garter snakes between breeding habitat and the riparian habitat, adjacent seeps, and ponds. Urban pollutants in runoff from impervious surfaces within the development may discharge into the existing stock pond or drainages. Pollution may result in mortality or chronic and deleterious effects to California red-legged frogs. Introduced exotic predators (*i.e.*, bullfrogs, crayfish, and/or sunfish) may prey upon or out-compete the species, especially in areas near development. Increases in the abundance of predators such as racoons (*Procyon lotor*) and domesticated pets such as cats are likely to occur in relation to the development and result in higher predation rates of all life stages of California red-legged frogs and San Francisco garter snakes. Although the controlling of rodent populations will not be allowed by the homeowners association, the occurrence of pets and the use of rodenticides within individual houses is likely to occur. This will result in a decrease of native rodents which will reduce the value of the upland habitat for San Francisco garter snakes. Furthermore, the majority of lowland habitat bordering the project area within the immediate vicinity of the project area has been developed. This project further decrease the amount of low elevation habitat available, forcing both California red-legged frogs and San Francisco garter snakes to increasingly inhabit suboptimal habitat.

Cumulative Effects

Cumulative effects include the effects of future State, Tribal, local, or private actions reasonably certain to occur in the action area considered in this biological opinion. Future Federal actions

unrelated to the proposed action are not considered in this section because they require separated consultation pursuant to section 7 of the Act.

Several impacts described in the environmental baseline section have adverse cumulative effects on California red-legged frogs and San Francisco garter snakes within the project vicinity. Ongoing impacts to the Half Moon Bay populations of California red-legged frogs and San Francisco garter snakes include: ongoing habitat destruction, alteration of hydrology, and isolation of individuals between suitable habitat types (*e.g.*, road construction). Ponds within the Half Moon Bay area will continue to be used to irrigate crops and will be subjected to unpredictable water level fluctuations and dewatering which may prevent the completion of metamorphosis for California red-legged frogs and result in the loss of foraging opportunities for San Francisco garter snakes.

Furthermore, the inadequate buffer distances associated with the proposed project will likely result in chronic problems associated with pets and predators associated with urban development (*e.g.*, racoons). Homeowners will own pets which will likely roam throughout the undeveloped open space. In addition, predators that can readily adapt to urban areas will be able to move in and establish populations at a higher carrying capacity than currently possible with the augmentation of food resources (*i.e.*, trash and pet food). Exotic species will likely remain within the project area, regardless of an eradication program. Exotic species such as bullfrogs will continue to compete with and prey upon California red-legged frogs which will result in a decrease in the preferred prey item for San Francisco garter snakes, and introduced fish species will continue to prey upon both California red-legged frogs and juvenile San Francisco garter snakes. The overgrazing of grasslands may continue to result in the erosion of riparian areas and prevent the establishment of coastal scrub adjacent to wetlands used by San Francisco garter snakes to forage, which results in lack of upland cover for the species.

Conclusion

After reviewing the current status of the species, the environmental baseline for the action area, the effects of the proposed action and the cumulative effects, it is the Service's biological opinion that the development of Pacific Ridge housing development, including the avoidance and minimization measures proposed, is not likely to jeopardize the continued existence of the California red-legged frog or San Francisco garter snake. No statutory critical habitat has been designated for this species, therefore, none will be affected.

INCIDENTAL TAKE STATEMENT

Section 9 of the Act and Federal regulation pursuant to section 4(d) of the Act prohibit the take of endangered and threatened species, respectively, without special exemption. Take is defined as harass, harm, pursue, hunt, shoot, wound, kill, trap, capture or collect, or to attempt to engage in any such conduct. Harass is defined by the Service as an intentional or negligent act or omission which creates the likelihood of injury to a listed species by annoying it to such an

extent as to significantly disrupt normal behavioral patterns which include, but are not limited to, breeding, feeding, or sheltering. Harm is defined by the Service to include significant habitat modification or degradation that results in death or injury to listed species by impairing behavioral patterns including breeding, feeding, or sheltering. Incidental take is defined as take that is incidental to, and not the purpose of, the carrying out of an otherwise lawful activity. Under the terms of section 7(b)(4) and section 7(o)(2), taking that is incidental to and not intended as part of the agency action is not considered to be prohibited taking under the Act provided that such taking is in compliance with this Incidental Take Statement.

The measures described below are non-discretionary, and must be implemented by the agency so that they become binding conditions of any grant or permit issued to the applicant, as appropriate, in order for the exemption in section 7(o)(2) to apply. The U.S. Army Corps of Engineers (Corps) has a continuing duty to regulate the activity covered by this incidental take statement. If the Corps (1) fails to require the applicant to adhere to the terms and conditions of the incidental take statement through enforceable terms that are added to the permit or grant document, and/or (2) fails to retain oversight to ensure compliance with these terms and conditions, the protective coverage of section 7(o)(2) may lapse.

Amount or Extent of Take

The Service expects that incidental take of California red-legged frogs and San Francisco garter snakes will be difficult to detect or quantify for the following reasons: The aquatic nature of the organisms and the relatively small body size of the California red-legged frog make the finding of a dead specimen unlikely, the secretive nature of the species, losses may be masked by seasonal fluctuations in numbers or other causes, and the species occurs in habitat that makes them difficult to detect. Due to the difficulty in quantifying the number of California red-legged frogs that will be taken as a result of the proposed action, the Service is quantifying take incidental to the project as the number of acres of habitat that will become unsuitable for the species as a result of the action. Therefore, the Service estimates that 3.7 acres of California red-legged frog habitat will become unsuitable as a result of the proposed action. Mortality or injury of San Francisco garter snakes associated with the completion of this project is not authorized. The Service has developed the following incidental take statement based on the premise that the reasonable and prudent measures will be implemented. Upon implementation of the following reasonable and prudent measures, incidental take associated with the Pacific Ridge housing development on 3.7 acres of habitat will become exempt from the prohibitions described under section 9 of the Act for direct impacts, and incidental take associated with the Pacific Ridge housing development on 3.7 acres of habitat will be exempt from the prohibitions described under section 9 of the Act for indirect impacts as a result of the management activities described.

Effect of the Take

The Service has determined that this level of anticipated take is not likely to result in jeopardy to either California red-legged frogs or San Francisco garter snakes or destruction or adverse modification of critical habitat.

Reasonable and Prudent Measures

The Service believes the following reasonable and prudent measures are necessary and appropriate to minimize the impacts of take on the listed species:

1. Minimize mortality of California red-legged frogs and San Francisco garter snakes.

2. Minimize the likelihood of harassing California red-legged frogs and San Francisco garter snakes.

3. Minimize harm to California red-legged frogs and San Francisco garter snakes as a result of habitat modification or loss.

Terms and Conditions

In order to be exempt from the prohibitions of section 9 of Act, the Corps must comply with the following terms and conditions, which implement the reasonable and prudent measures described above. These terms and conditions are nondiscretionary.

1. To minimize the potential for mortality to California red-legged frogs the Corps shall ensure that Ailanto Properties complies with the following:

   a. The filling of drainage channels and wetlands shall be confined to July 15 through October 31.

   b. Pre-construction surveys for both California red-legged frogs and San Francisco garter snakes in and around stream crossings and adjacent to the existing stock pond shall be conducted within two days prior to the initiation of project construction.

   c. The pre-construction surveys in and around the stream crossings and the existing stock pond shall be conducted by a qualified biologist with a valid scientific take permit for capturing and handling California red-legged frogs and San Francisco garter snakes and any California red-legged frogs or San Francisco garter snakes found within the project impact area shall be captured and relocated by the qualified biologist to appropriate habitat in the existing stock pond.

   d. Direct mortality or injury to San Francisco garter snakes is not authorized with the accompanying incidental take statement.

2. To minimize the likelihood of harassing California red-legged frogs and San Francisco garter snakes the Corps shall ensure that Ailanto Properties complies with the following:

   a. A biological monitor shall brief the construction crew on the potential presence of California red-legged frogs and San Francisco garter snakes in the project area, and educate onsite workers in the identification and habitat requirements of California red-legged frogs and San Francisco garter snakes, and the ramifications of direct take of these species.

   b. A biological monitor shall be on call throughout the entire construction process to ensure that no California red-legged frogs or San Francisco garter snakes will be harassed by the construction of the housing development. The biological monitor shall have the authority to shut down the construction operation if either California red-legged frogs or San Francisco garter snakes are observed within the construction area.

3. To minimize the impacts of habitat modifications or loss to California red-legged frogs and San Francisco garter snakes, the Corps shall ensure that Ailanto Properties complies with the following:

   a. Ailanto Properties shall enter into an agreement to endow founds to an escrow account to the amount of $100,000 for the purposes of purchasing and enhancing a minimum of 5.4 acres of breeding, dispersal, and foraging habitat presently occupied or adjacent to occupied California red-legged frog and San Francisco garter snake habitat within 15 miles of the project site. Such an agreement shall be executed prior to the execution of grading within the project area.

   b. No development, including grading, shall occur within 150 feet of the existing stock pond.

   c. The Corps shall provide the Service with a revised final mitigation plan and final map of the project site before the initiation of construction so that the Service can review the project to ensure that these conditions are met.

   d. A conservation easement that is agreed upon by the Service shall be established over the entire area designated as open space and ESAs, to permanently protect habitat for California red-legged frogs and San Francisco garter snakes.

   e. The proposed path associated with the existing stock pond shall be fenced off and access to the pond shall only be provided to individuals maintaining the pond and emergency vehicles. The path shall not be paved and shall be located along the north and west side of the pond to facilitate maintenance of the pond.

f. An annual monitoring report shall be submitted by Ailanto Properties to both the Corps and the Service outlining the status and success of the minimization measures. The report shall include: vegetation abundance and diversity, presence and number of California red-legged frogs and San Francisco garter snakes observed, and determination of breeding. In addition, the report shall include the number of bullfrogs detected and eradicated from the existing stock pond. The report will be submitted annually for 10 years.

The reasonable and prudent measures, with their implementing terms and conditions, are designed to minimize the impact of incidental take that might otherwise result from the proposed action. With implementation of these measures, the Service believes that no more than 3.7 acres of California red-legged frog and San Francisco garter snake habitat will be directly lost through project construction activities.

If during the course of the action, this level of incidental take is exceeded, such incidental take represents new information requiring review of the reasonable and prudent measures provided. The Corps must immediately provide an explanation of the causes of the taking and review with the Service the need for possible modification of the reasonable and prudent measures.

Reporting Requirements

The Service must be notified within 24 hours of the finding of any injured or dead California red-legged frog or San Francisco garter snake, or any unanticipated damage to the species habitats associated with project construction, mitigation, or operation. Notification must include the date, time, and precise location of the specimen/incident, and any other pertinent information. The Service contact person is the Chief, Endangered Species Division in the Sacramento Fish and Wildlife Office, at (916) 979-2725. Any dead or injured specimens will be reposited with the Service's Division of Law Enforcement, 3310 El Camino Avenue, Suite 140, Sacramento, California 95821-6340, telephone (916) 979-2987.

Provide copies of annual reports on the status and success of the mitigation actions to the Chief, Endangered Species Division, in the Service's Sacramento Fish and Wildlife Office.

CONSERVATION RECOMMENDATIONS

Section 7(a)(1) of the Act directs Federal agencies to utilize their authorities to further the purposes of the Act by carrying out conservation programs for the benefit of endangered and threatened species. Conservation recommendations are discretionary agency activities to implement recovery actions, to help implement recovery plans, to develop information, or otherwise further the purposes of the Act.

In order for the Service to be kept informed of actions minimizing or avoiding adverse effects or benefitting listed species or their habitats, the Service requests notification of the implementation of any conservation recommendations. We have the following recommendations:

1. Synthesize the results of all monitoring reports submitted to the Corps' San Francisco District on the status of California red-legged frogs and San Francisco garter snakes to identify and report on the effects of permitted actions on California red-legged frog and San Francisco garter snake populations.

2. Study and report on the success of habitat preservation and enhancement for California red-legged frogs and San Francisco garter snakes.

3. Study and report on the dispersal patterns, habitat use, and necessary buffer size between urban development and California red-legged frog and San Francisco garter snake habitat.

REINITIATION--CLOSING STATEMENT

This concludes formal consultation on the actions outlined in the request. As provided in 50 CFR §402.16, reinitiation of formal consultation is required where discretionary Federal agency involvement or control over the action has been maintained (or is authorized by law) and if: (1) the amount or extent of incidental take is exceeded; (2) new information reveals effects of the agency action that may affect listed species or critical habitat in a manner or to an extent not considered in this opinion; (3) the agency action is subsequently modified in a manner that causes an effect to the listed species or critical habitat that was not considered in this opinion; or (4) a new species is listed or critical habitat designated that may be affected by the action. In instances where the amount or extent of incidental take is exceeded, any operations causing such take must cease pending reinitiation.

If you have any questions regarding this opinion, please contact Curtis McCasland or Ken Sanchez at (916) 979-2752.

Sincerely,

for Wayne S. White
Field Supervisor

cc: AES, Portland, OR
CDFG, Yountville, CA (Carl Wilcox), Yountville, CA
Ailanto Properties (Robert Henry), Oakland, CA
LSA Associates (Steve Foreman), Pt. Richmond, CA

LITERATURE CITED

Bury, R.B. and J.A. Whelan. 1984. Ecology and management of the bullfrog. U.S. Fish and Wildlife Service Resource Publication 155. 23 pp.

Emlen, S.T. 1977. "Double clutching" and its possible significance in the bullfrog. Copeia 1977(4):749-751.

Hayes, M.P. and M.R. Jennings. 1988. Habitat correlates of distribution of the California red-legged frog (*Rana aurora draytonii*) and the foothill yellow-legged frog (*Rana boylii*): Implications for management. Pages 144-158 *In*: R. Sarzo, K. E. Severson, and D. R. Patton (technical coordinators). Proceedings of the Symposium on the Management of Amphibians, Reptiles, and Small Mammals in North America. U.S.D.A. Forest Service General Technical Report RM-166.

Hayes, M.P. and D.M. Krempels. 1986. Vocal sac variation among frogs of the genus *Rana* from western North America. Copeia 1986(4):927-936.

Hayes, M.P. and M.M. Miyamoto. 1984. Biochemical, behavioral and body size differences between *Rana aurora aurora* and *R. a. draytonii*. Copeia 1984(4):1018-1022.

Hayes, M.P. and M.R. Tennant. 1985. Diet and feeding behavior of the California red-legged frog, (*Rana aurora draytonii*) (Ranidae). The Southwestern Naturalist 30(4):601-605.

Jennings, M.R. 1988. Natural history and decline of native ranids in California. Pages 61-72 *In:* H.F. DeLisle, P.R. Brown, B. Kaufman, and B.M. McGurty (editors). Proceedings of the conference on California herpetology. Southwestern Herpetologists Society, Special Publication (4):1-143.

Jennings, M.R. and M.P. Hayes. 1985. Pre-1900 overharvest of California red-legged frogs (*Rana aurora draytonii*): The inducement for bullfrog (*Rana catesbeiana*) introduction. Herpetologica 41(1):94-103.

Jennings, M.R. and M.P. Hayes. 1990. Status of the California red-legged frog (*Rana aurora draytonii*) in the Pescadero Marsh Natural Preserve. Report prepared for the California Department of Parks and Recreation, Sacramento, California. 30 pp. + Tables and Figures.

Jennings, M.R., M.P. Hayes, and D.C. Holland. 1992. A petition to the U.S. Fish and Wildlife Service to place the California red-legged frog (*Rana aurora draytonii*) and the western pond turtle (*Clemmys marmorata*) on the list of endangered and threatened wildlife and plants. 21 pp.

Kruse, K.C. and M.G. Francis. 1977. A predation deterrent in larvae of the bullfrog, *Rana catesbeiana*. Transactions of the American Fisheries Society 106(3):248-252.

Attachment 7

LSA Associates, Inc.

Environmental Analysis
Transportation Engineering
Biology and Wetlands
Habitat Restoration
Resource Management
Community and Land Planning
Landscape Architecture
Archaeology and Paleontology

LSA

October 2, 1998

Principals

Rob Balen
Sheila Brady
Les Card
David Clore
Steve Granholm
Richard Harlacher
Roger Harris
Art Homrighausen
Larry Kennings
Carollyn Lobell
Bill Mayer
Rob McCann
Rob Schonholtz
Malcolm J. Sproul

Associates

Deborah Baer
James Baum
Connie Calica
Steven W. Conkling
Rois Dobberteen
Gary Dotz
Richard Erickson
Kevin Fincher
Clint Kellner
Laura Lafler
Benson Lee
Judith H. Malamut
Sabrina Nicholls
M. W. "Bill" O'Connell
Anthony Petros
Lynette Stanchina
Jill Wilson
Lloyd B. Zola

Curt McCasland
U.S. Fish and Wildlife Service
3310 El Camino Ave., Suite 130
Sacramento, CA 95821

Subject: Pacific Ridge at Half Moon Bay, Corps File No. 23053S

Dear Curt:

As requested, we have calculated the pond setbacks and the "impacted" pond buffer acreage per our discussions over the last few days. We have also used this information to summarize Ailanto Properties final mitigation offer.

As we discussed on September 30, you stated your concerns for the ability to protect buffer habitat around the pond from landscaping/yard encroachment by adjacent residences. The proposed buffers, as shown on the attached draft map, can be legally established as deed restrictions under the existing City of Half Moon Bay zoning code for the Pacific Ridge development. This ordinance provides for the establishment of environmentally sensitive areas (ESAs) which are to be designated on the Final Map. In the designated ESAs, the ordinance prohibits all land form alteration, vegetation or soil removal, and introduced landscaping. These conditions are to be recorded as deed restrictions for all properties adjacent to or abutting the environmentally sensitive areas. The zoning code provides a viable enforcement mechanism to protect buffer zones on individual lots and community open space around the pond, wetlands, and riparian corridors. A copy of this section of the zoning code is attached for your review.

Ailanto Properties proposes to establish the ESA zone at the appropriate edge of the designated building envelopes (the inner box shown for each lot as shown on the attached map) of all the lots around the pond (lots 147-156, 189-197, and 204 to 207), along drainage 4 (156-158, 166, 167, 189, and 120-122), the upper portions of drainage 3 (lots 120-122), and on the knoll northwest of the pond (lots 198-203). The ESA designation would also be extended to the edge of all the lots bordering the other drainages (1 and 2)

10/02/98(H:\STEVEF\FILES\APR830\PONDCALC.FWS)

157 Park Place
Pt. Richmond, California 94801

Telephone 510 236-6810
Facsimile 510 236-3480

Other offices located in Berkeley
Irvine, Riverside and Sacramento

and wetland mitigation areas/corridors. The proposed ESAs are shown in the cross-hatching on the attached map. The trail/maintenance access would be the only allowable use in the ESA around the pond (note: the trail alignment shown on the attached map around the pond does not reflect the modified alignment agreed to in our May 26, 1998 mitigation plan/project amendment letter).

The map also shows the approximate minimum setback/buffer distance between the lake and any building or developed/landscaped area using the proposed ESA setbacks. For the immediate pond area, the buffers range from 55 to 280 feet. The average habitat setback/buffer width is in the range of 100 feet. The total contiguous habitat area around the pond is 7.5 acres, consisting of 2.4 acres of pond and 5.1 acres of upland buffer. This is roughly a 2.1:1 buffer to pond ratio.

The drainage 4 corridor widths to the pond are generally in the range of 130 to 140 feet. The narrowest point is 65 feet. The other two corridors between the pond and the ponds to the north of the project site have minimum widths of 165 feet and 180 feet. If you include these habitat areas with the pond area, there is an additional 8 acres, or 15.5 acres of essentially contiguous habitat associated with the retained pond.

As we have discussed and previously committed, Ailanto Properties is willing to designate the ESAs and plant the drainages with willows and coastal scrub vegetation in the upland habitat buffer areas.

Given the current and historic values of the pond, I believe our proposed buffers, in combination with the above and other measures proposed in the mitigation plan, are adequate to protect the pond and allow red-legged frog and garter snake the opportunity to inhabit the pond. However, given your stated concerns for additional indirect impact to potential endangered species habitat, Ailanto Properties in their September 29, 1998 letter has agreed to provide additional offsite habitat mitigation. As we have discussed, the amount of offsite mitigation would be based on some calculation of "impacted" pond buffer habitat.

I calculated the "impacted" buffer areas using the criteria we have discussed. Using a 150-foot buffer around the pond and 150-foot wide corridor on drainages 3 and 4 as was my understanding from our discussion on August 12, the impacted area is 2.7 acres. This area is shown as the interior red line. Using a 300-foot zone from the pond edge as you mentioned on September 30, the affected area increases to 9.4 acres, including both drainages. This zone is shown as the outer blue line on the attached map.

The developed residential area pertaining to offsite mitigation area (homes, landscaped areas and streets) in each zone is summarized below:

Buffer Impact Zone	Developed Area Beyond Designated Buffers
150 feet from pond	2.1 acres
300 feet from pond	6.7 acres
150-foot wide corridor on drainage 4	0.4 acres
150-foot wide corridor on drainage 3	0.2 acres

I believe the 150-foot zone from the pond is a reasonable measure for calculating the required acreage for offsite mitigation given the proposed onsite habitat protection and enhancement measures for the existing pond. The 150-foot buffer is also more consistent with previous FWS assessments regarding buffer zone widths adjacent to wetlands and endangered species habitats in relation to residential development.

The 300-foot figure you suggested appears arbitrary and excessive and, in my opinion, would not provide any significant increase in "protection" for the pond in relation to your stated concerns for indirect impacts associated with cats, dogs, and kids.

In summary, Ailanto Properties proposed mitigation measures include:

- Implement the December 1997 wetland mitigation plan as amended by our letter of May 26, 1998. These modifications include site design modifications to reduce wetland fill, provide broader corridors and buffers, trail location, and the number and location of the wetland mitigation sites. We believe these measures are consistent with the Service's guidance provided to us in March 1998.

- Designate the ESAs for the Final Subdivision Map as described in this letter.

- Plant the retained portions of drainage 4 with willows and the upland habitat buffer areas around the pond with coastal scrub vegetation as you requested and proposed in our letter of July 27, 1998.

- Provide funding for offsite mitigation per Ailanto Properties letter of September 29, 1998.

As we have previously committed, all of the revised measures and applicable implementation details will be incorporated into a final mitigation plan prior to construction once we have all of the final conditions and requirements.

We believe the proposed measures will more than adequately mitigate for impacts to potential endangered species habitat associated with the current habitat conditions at the artificial pond. Our measures include control of bull

frog and fish populations currently inhabiting the pond and stabilization of the headcut which is threatening to drain the pond. In combination with the other proposed measures, the pond will provide suitable habitat and create a greater opportunity for red-legged frog and San Francisco garter snake to inhabit pond.

We request at least a verbal response on the acceptability of this final mitigation proposal no later than October 6. The City will be holding a public meeting on the project on October 8 and has requested information on the acceptability of the proposed mitigation measures.

If you have any questions or require additional information, please do not hesitate to contact me.

Sincerely,

LSA ASSOCIATES, INC.

Steve Foreman
Wildlife Biologist

cc Bob Henry, Ailanto Properties
Mark D'Avignon, Corps
Mike Napolitano, RWQCB

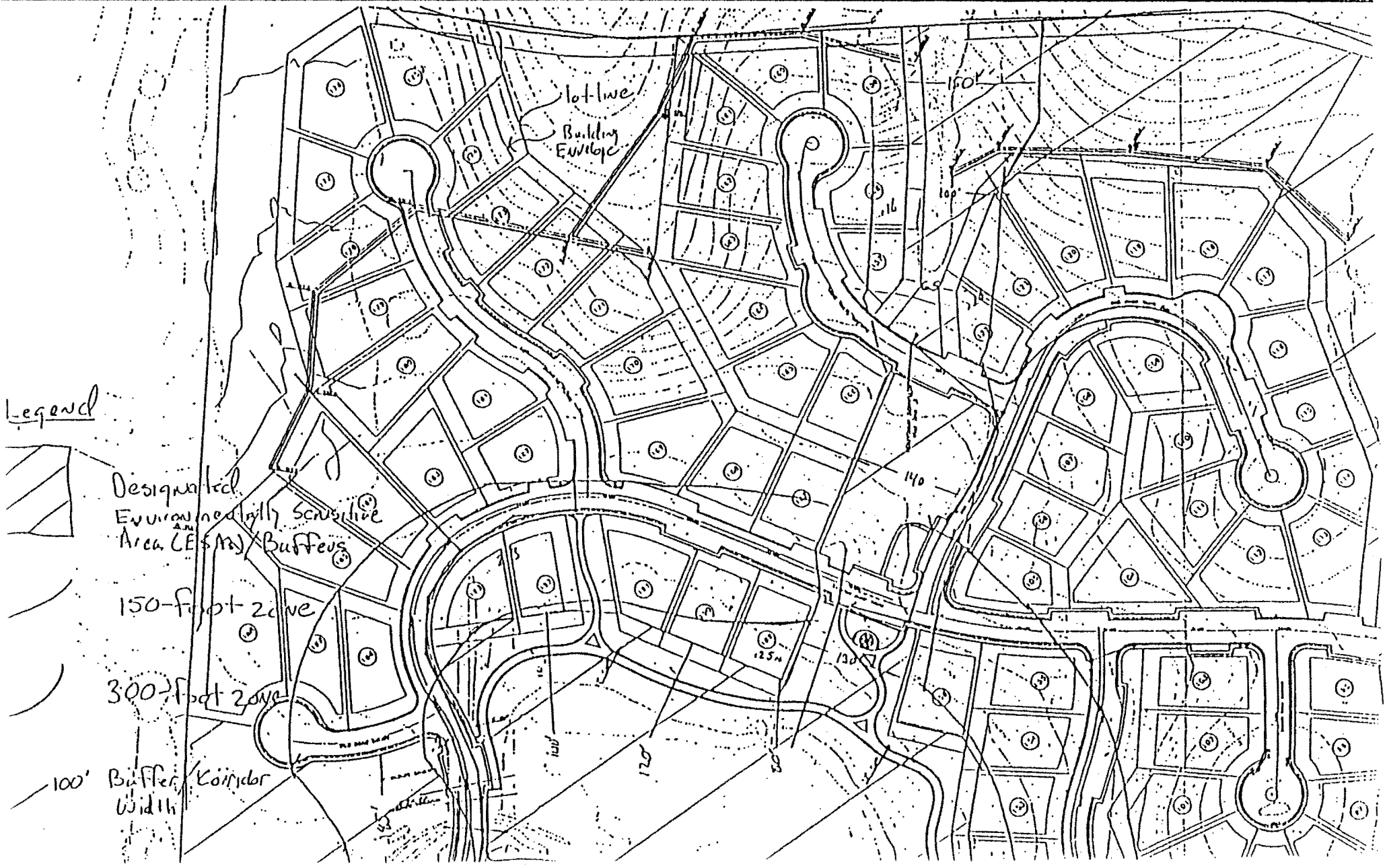
lot line
Building Envelope
150'
100'
140
125
130
120
Legend
Designated Environmentally Sensitive Area (ESA) Buffers
150-foot zone
300-foot zone
100' Buffer Corridor Width

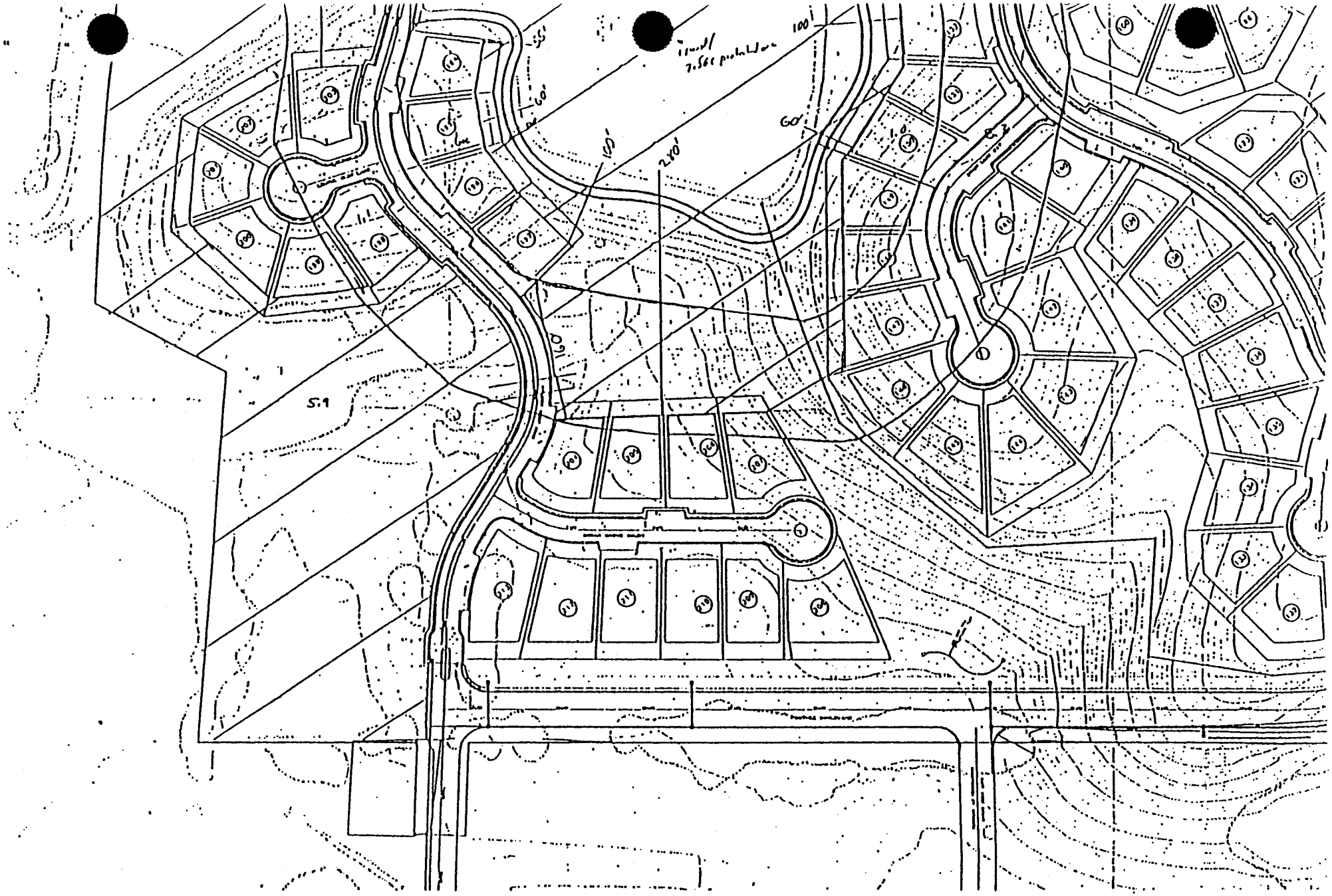
100'
60'
60'
150'
270'
5.9

deemed necessary and appropriate, the Planning Director may require Planning Commission review and approval of a Site and Design Permit in accordance with the provisions of the Zoning Code.

18.16.045 Development Adjacent to Sensitive Habitat. The Final Map shall show all of the riparian corridors and habitats and any other environmentally sensitive areas, and the extent of any required buffer zones. The following standards shall be applied to all development within or adjacent to these areas designated on the Final Map;

A. That there shall be no land form alteration or grading, no vegetation or soil removal of any kind, and no introduced landscaping planted within the buffer zones surrounding the Environmentally Sensitive Habitat Areas or Riparian Corridors as shown on the Final Map, except as may be required to correct drainage problems, repair erosion damage, remove hazardous conditions, and provide for fire safety. Prior to the commencement of any activities within these areas as shown on the Final Map, the Planning Director shall review the details of the proposed activities. If the Planning Director determines it to be necessary and appropriate, plans for the proposed activities shall be forwarded to the California Department of Fish and Game, Army Corps of Engineers, or any other County, State, or Federal agency with review and/or permit authority over the proposed activities;

B. That Deed Restrictions shall be recorded against all properties adjacent to or abutting the environmentally sensitive habitat areas and buffer zones ensuring that all purchasers and subsequent owners of the property are informed of the development restrictions in these areas;

C. The United States Army Corps of Engineers has established jurisdiction over specified wetland areas located within the boundaries of the Dykstra Ranch Planned Unit Development. A Section 404 Permit will be required prior to the approval of any Final Map that differs from the approved Vesting Tentative Map. Conditions of that permit shall be binding to all parties of the development of the site and shall be incorporated into the Final Map as conditions of Approval.

D. The California Department of Fish and Game has statutory jurisdiction over stream beds and other riparian areas. A Section 1601 Permit may be required prior to the approval of any Final Map if the area covered by the Final Map involves any stream bed or riparian area. Conditions of that permit shall be binding to all parties to the development of the site and shall be incorporated into the Final Map as Conditions of Approval.

18.16.050 Preservation of Streams, Wetlands Habitats, and Lake. The following shall apply to all development within the Dykstra Ranch Planned Unit Development area:

A. That approval by the United States Army Corps of Engineers is required for any activities involving the streams and drainage courses;

B. Each development phase will require consultation with the California Department of Fish and Game to insure that the streams and habitats are adequately protected. A 1601 Permit issued by the Department of Fish an Game maybe required for each phase of the development;

C. That the discharge of any swimming pool water or any other materials into any of the creeks, streams, drainage courses, or the lake is strictly prohibited;

D. That the proposed check dams in the intermittent creek channels shall be approved by the Department of Fish and Game and Army Corps of Engineers. The existing dense vegetation shall be preserved to the maximum extent practicable. Any required thinning of the existing vegetation shall be kept to a minimum in order to reduce potential erosion of the stream banks.

18.16.055 Preservation of the Pond.

A. The following policies, programs, and requirements shall be conformed with at all times

1. The existing agricultural pond shall be retained and upgraded as a visual amenity and wildlife habitat;

2. Swimming, boating, fishing, and any other form of contact or non-contract activity on or in the lake is strictly prohibited;

3. Life safety and emergency equipment, including an emergency telephone shall be installed and maintained adjacent to the lake at a location approved by the Police Chief and Fire Chief;

4. That all areas of the pond that are less than four feet in depth shall be lined with either a gas permeable membrane, concrete, cemented cobbles, or other material approved by the Department of Fish and Game and Army Corps of Engineers that will prevent aquatic plants from rooting on the pond bottom;

5. That in order to limit the amount of nutrients entering the pond, a slight trough shall be constructed around the perimeter. Surface runoff shall be collected in this trough and routed to the approved storm drain system;

CASSIDY
CHEATHAM
SHIMKO &
DAWSON
A Professional Corporation

RECEIVED
OCT 29 1999
CALIFORNIA
COASTAL COMMISSION

October 28, 1999

VIA HAND DELIVERY

Steve F. Scholl
Chris Kearn
California Coastal Commission
45 Fremont Street, Suite 2000
San Francisco, CA 94105

Re: Pacific Ridge; Appeal No. A-1-HMB-99-022

Dear Messrs. Scholl and Kearn:

We are writing on behalf of our client, Ailanto Properties, Inc. ("Ailanto"), in connection with the above-referenced appeal. Ailanto has made dramatic and drastic changes to the plans for the Pacific Ridge project (as revised, the "Project") based on the Coastal Commission staff's interpretation of the jurisdiction of the Coastal Commission and various policies of the City of Half Moon Bay ("City") Local Coastal Program ("LCP"). At the outset, as you know, we disagree with staff's interpretations on several key and vital issues that raise significant policy issues,[1] and in this connection, we set

[1] Specifically, we disagree with staff that (a) the entire Project is subject to Coastal Commission jurisdiction, (b) none of the wetlands on-site are exempt from the Commission's jurisdiction, and (c) all wetlands require 100 foot buffers.

20 CALIFORNIA STREET, SUITE 500, SAN FRANCISCO, CA 94111 TELEPHONE: (415) 788-2040 FACSIMILE: (415) 788-2039

forth in the companion letter submitted herewith (the "Companion Letter") the legal bases for our objections. We submit the Companion Letter so that the Commission can re-evaluate staff's interpretation and exercise its own judgment, hopefully moderating staff's positions that, in our view, are draconian, startling and set poor precedent.

That said, we submit herewith a revised plan (the "Revised Plan"), attached hereto as Exhibit A, for the Project amending Ailanto's CDP application for purposes of any de novo hearing by the Coastal Commission in December, 1999. The Revised Plan, and the discussion in this letter of its consistency with the LCP, treats as correct each of staff's stated interpretations of law and policy governing the Project and the Commission's jurisdiction over the Project. However, to the extent that the Commission disagrees with staff's interpretation on any of the issues set forth in the Companion Letter, we hereby reserve Ailanto's right to review and further amend, if appropriate, the Revised Plan in accordance with the Commission's jurisdictional determination, as well as its interpretations of the applicable rules and regulations that govern the Project.

As shown on the Revised Plan, the Project has been revised to reduce the number of homes from 197 approved by City

to 150; the circulation system has been altered to avoid coastal resources to the greatest degree feasible; and a trail network and a community garden are included as Project amenities. Except as revised, elements of the previously approved plan remain. The most glaring change is that the Project contains significantly fewer homes than were approved by the City -- 34% fewer than under Ailanto's Vesting Tentative Map and 23% fewer than under the CDP that is the subject of the appeal. In the 1980s, City adopted and the Coastal Commission certified the Land Use Plan ("LUP"). The LUP states that residential development of 228 units is appropriate at the Project site (the "Property"). In 1990, City approved 216 homes for the Property when it approved the Final EIR, the Vesting Tentative Map and the Planned Unit Development Ordinance (the "PUD Ordinance"). The PUD Ordinance, which refers to the Vesting Tentative Map as the basis for its development standards, was approved by the Coastal Commission when it certified the Implementation Plan for the LCP. In 1998, following extensive public hearings and intensive negotiations, the development was downsized to 197 units in connection with City's approval of the CDP that is the subject of this appeal. Now, through the Revised Plan, Ailanto has further and

substantially reduced the number of homes to 150 units[2] to accommodate the concerns of Coastal Commission staff, notwithstanding the fact that we believe that more homes could be built in full compliance with the requirements of City's LCP.

In this letter, we will demonstrate how the entire Project is fully consistent with the applicable LCP policies and standards for the protection of coastal resources and access, as well how it responds to other concerns raised by staff.

I. The Entire Project Is Consistent With All Applicable Policies and Requirements of the LCP Relating to the Protection of Coastal Resources.

Assuming *arguendo* that the entire Project is within the Coastal Commission's jurisdiction, including the wetlands we believe to be exempt under the Coastal Commission Regulations (at 14 Cal. Code of Regs. § 13000 et seq.; "Regulations"), the Project is consistent with all of the LCP's requirements pertaining to the protection of coastal resources, as illustrated below.

A. Wetlands on the Property.

An updated wetlands delineation was provided to you on June 24, 1999, using the definition of "wetlands" found in

---

[2] The Revised Plan erroneously shows 151 units when, in fact, Ailanto has determined that Lot 114 will not be developed in order to avoid encroaching into a wetland buffer.

Coastal Act § 30121, Regulations § 13577(b), the Coastal Commission's Procedural Guidance for the Review of Wetland Projects in California's Coastal Zone (the "Procedural Guidance"), and the LCP. Since that submission, an additional wetland has formed. See, Letter to Darryl Rance from Steve Foreman, dated September 28, 1999, and revised wetlands delineation attached hereto as Exhibit B. The Coastal Commission's biologist, John Dixon, has reviewed this complete updated delineation, visited the Property and determined that the wetlands delineation is an accurate (indeed, conservative) one.

i. Permitted Uses in Wetlands.

No uses are proposed within the wetlands on the Property, although the LCP would permit education and research, passive recreation such as bird-watching and fish and wildlife management activities, and certain other uses with approval of a use permit. Zoning Ordinance ("Z.O.") § 18.38.080(A) and (B).

ii. Wetland Buffer Zones.

In terms of buffer zones for wetlands, Policy 3-11(c)(Establishment of Buffer Zones) requires a 100 foot buffer from the high water point of "lakes, ponds and other wet areas," except man-made agricultural ponds and reservoirs. Z.O. § 18.38.080(D) implements Policy 3-11(c) and requires a 100 foot

buffer surrounding "lakes, ponds and marshes," measured from the high water point, except for man-made agricultural ponds and reservoirs. Coastal Commission staff has interpreted this provision to require 100 foot buffer zones around all wetlands, not just lakes, ponds and marshes. While we disagree with this conclusion (see, Companion Letter), the Project incorporates 100 foot buffers for all wetlands on the Property, and proposes only those uses allowed within buffer zones. See, Section (I)(A)(iii) below.

The agricultural pond on the Property is exempt from the 100 foot buffer requirement under Z.O. § 18.38.080(D), which provides that "no buffer is required for man-made ponds and reservoirs used for agriculture." The agricultural pond will continue its use for agriculture in that it will serve as the water source for the proposed community agricultural garden near Wetland H.[3] The Conditions, Covenants and Restrictions for the Project (the "CC&Rs") will mandate that the garden remain open to the homeowners. While there is no buffer requirement for the agricultural pond, the Project nonetheless incorporates significant buffers around the pond (most equaling 100 feet),

---

[3] See, map attached hereto as Exhibit C, which sets forth the coastal resources on the Property, for designations of wetlands and other resources on the Property.

except for the placement of a road directly to the west of the pond. This portion of the critical loop road has been moved closer to the pond than previously proposed, so that it sits atop the existing dam, minimizing construction grading and minimizing intrusion into the adjacent wetland buffer to the west.

iii. Permitted Uses Within Wetland Buffer Zones and Findings Necessary to Support Development Within Wetland Buffer Zones.

The permitted uses within wetland buffer zones are those uses permitted in riparian buffer zones. See, Z.O. § 18.38.080(E). The uses permitted in riparian buffer zones include uses permitted in riparian corridors, *i.e.*, education and research, consumptive uses, fish and wildlife management activities, trails and scenic overlooks on public lands, necessary water supply projects, and restoration of riparian vegetation, as well as the following uses where no feasible or practical alternative exists: stream dependent aquaculture, flood control projects, bridges when supports are not in significant conflict with corridor resources, pipelines and storm water runoff facilities, improvement, repair, or maintenance of roadways or road crossings, and agricultural uses. See, Z.O. § 18.38.075(A) and (E).

The Project encompasses four permitted uses within wetland buffer zones, each of which satisfies all requirements for development within wetland buffer zones under Z.O. §§ 18.38.080 (E), (G) and (H).[4]

a. Emergency Vehicle Access Road.

First, the Project includes within the 100 foot buffer zone for Wetland A the improvement and maintenance of an existing dirt road for an emergency vehicle access road ("EVA"). This existing dirt road is an extension of Grandview Boulevard, and was previously the access to the ranch house located on what is now Wetland A on the Property, as can be seen on historical aerial photos. It would be paved to satisfy the local Fire District requirements for EVAs.

Under the LCP, the improvement, repair or maintenance of a roadway in wetland buffer zones is permitted. Z.O. § 18.38.080(E) and §18.38.075(B) and (E). There is no feasible or practical alternative other than to improve the existing dirt

[4] Subsection (E) of Z.O. § 18.38.080 provides that the uses permitted in riparian buffer zones are permitted in wetland buffer zones. Subsection (G) of this same section provides that the performance standards for development in riparian buffer zones apply to development within wetland buffer zones. Subsection (H) requires certain findings to be made for development within wetland buffer zones.

road for the EVA road.[5] City's Fire Department mandates a secondary access road for the Project. The Project will be served by Terrace Avenue, and may at some point also be accessed via Foothill Boulevard and/or Bayview Drive. However, since these other two access routes do not currently exist and both will require further environmental analysis and actions by the City and neighboring property owners before their construction is realized, neither can be assumed in planning the Project. The one and only feasible and practical option is to use the existing dirt road extending from Grandview Boulevard for this secondary access. Indeed, the use of Grandview Boulevard as an EVA was always envisioned. See, Final EIR.

The improvement of the EVA in the Wetland A buffer zone will meet all development standards under Z.O. § 18.38.080(G). Specifically, a comprehensive Stormwater Pollution Prevention Program for the Project (the "SWPPP"), as well as the construction contracts, will ensure that removal of vegetation is

---

[5] We note that it is not necessary to make findings that there is no feasible or practical alternative, since the permitted uses within wetland buffer zones include uses permitted within riparian buffer zones, which, in turn, permit (without stating that "no feasible or practical alternative" findings are needed) all uses permitted in riparian corridors (such as the improvement, repair or maintenance of roadways). Thus, while alternative findings are required for certain uses within riparian and wetlands buffer zones under Z.O. § 18.38.075(F), such findings are not required when riparian corridor uses occur within riparian or wetlands buffer zones. Nevertheless, for purposes of this letter, we assume that such findings will be made.

minimized to a less than significant level; the EVA will conform to the natural topography as its construction will involve minimal grading; erosion will be minimized via the SWPPP; and discharges of toxic substances into the wetland will also be minimized through the SWPPP. In addition, the Project's drainage plan and the SWPPP will ensure that runoff and sedimentation will not exceed pre-development levels, which will be easily accomplished since the Property is currently used for cattle grazing and there are currently no protective measures in place to deal with erosion and sedimentation from cattle activities or effects to water quality due to runoff containing cattle excrement. No replanting will occur in connection with the improvement of the dirt road for the EVA.

There is ample evidence to support the findings required under Z.O. § 18.38.080(H) for improvement of the EVA in the Wetland A buffer zone. The special circumstance affecting the Property is that there needs to be secondary access to the Property and the only option is to improve the already existing dirt road within the buffer zone for Wetland A for occasional (or more probable, very rare) use as an EVA. The retention of this encroachment into the buffer zone for Wetland A is also necessary for the proper design and function of the Project. Without the

EVA, the Project would not have adequate emergency access. The EVA will not be detrimental to the public welfare or injurious to other property in the area; in fact, it will serve a beneficial function by providing a non-invasive secondary emergency vehicle access road to the Project so that timely and effective emergency responses can be made. The EVA will not significantly reduce or adversely impact any habitat in the vicinity, sensitive or otherwise, since measures to funnel runoff away from Wetland A will be incorporated as part of the Project's drainage plan and the SWPPP. The EVA also comports with the purposes of the LUP and the Zoning Ordinance chapter on the protection of coastal resources in that the improvement and maintenance of the EVA will not result in adverse impacts to coastal resources and respects the existing buffer from Wetland A.

b. Bridge.

Second, the Project includes a bridge, in the form of an oversized arched culvert, within the shared buffer for Wetlands E and I along Drainage 3. This bridge has been moved closer to Wetlands E and I than originally planned per the Coastal Commission staff's recommendation to avoid placing the loop road across the community of willows along Drainage 3. Coastal Commission staff biologist, John Dixon, has stated that

encroaching into the common buffer zone for Wetlands E and I is environmentally superior to crossing the willow community along Drainage 3.

As the Coastal Commission staff recommended, Ailanto explored the possibility of ending the southernly route of the loop road short of Drainage 3 so that the road would be a cul de sac instead of a complete loop. The staff suggested then improving the remainder of the loop road (over Drainage 3) as a mere EVA. Not only would such change in the key elements of the Project adversely affect the planned circulation pattern, but City's Police Chief has determined that an EVA is not advisable for safety reasons. See, Letter from Dennis Wick to Robert Henry, dated October 25, 1999, attached hereto as Exhibit D. Therefore, the Revised Plan continues to show the loop road over Drainage 3.

The bridge is a permitted use in a wetland buffer zone under Z.O. § 18.38.080(E) and § 18.38.075(B) and (E) when bridge supports are not in conflict with corridor resources. Because no supports for the oversized arched culvert bridges will be used, there is no issue of such supports conflicting with corridor resources.

There is no feasible or practical alternative to placing this bridge through the wetland buffer zone.[6] The loop road is integral to Project circulation and cannot be feasiblely constructed without crossing the upper part of Drainage 3 at some location. Not only does the loop road serve the homes on the northern part of the Property, but it also provides public access to the trails around the pond feature. Furthermore, placement of this bridge through the wetland buffer zone is the least environmentally damaging alternative since it avoids encroaching on the more significant coastal resources along Drainage 3, such as the willow community.

The placement of the bridge within the shared buffer zone for Wetlands E and I will meet all development standards under Z.O. §§ 18.38.080(G) and 18.38.075(G). Removal of vegetation will be minimized to avoid significant adverse impacts -- indeed, the very purpose of constructing the bridge in the wetland buffer zone instead of through the riparian corridor is to minimize removal of willow trees, which are riparian vegetation. In addition, the SWPPP and the construction contracts will further ensure that removal of vegetation is

---

[6] We reiterate here that findings of a lack of feasible or practical alternative are not necessary. See, footnote 5, supra.

either minimized or prohibited in the appropriate areas. Likewise, grading will be minimized so as to respect the natural topography of the area. In addition, the SWPPP will ensure that any erosion potential is adequately addressed and minimized. The SWPPP will also prevent any discharge of toxic substances from the bridge. As explained above, runoff and sedimentation will not exceed pre-development levels via the Project's drainage plan and the SWPPP. Only native and non-invasive exotic plants will be used in replanting areas in connection with construction of the bridge per the landscaping plan for the Project.

The findings required under Z.O. § 18.38.080(H) for the placement of the bridge in the shared buffer zone for Wetlands E and I are also fully supported by the evidence. As explained above, vast portions of the northeastern part of the Property would be inaccessible without some crossing of the upper portion of Drainage 3, and encroaching into the wetland buffer zone will be environmentally superior to removing willows at another location. The bridge is also necessary for the proper design and function of the Project because without it, the integral loop road could not be constructed, posing internal circulation and emergency vehicle access problems. In no way will the bridge be detrimental to the public welfare as it will be properly

designed. Nor will the bridge be injurious to other property in the area given its great distance away from other properties. Moreover, as stated above, there is no feasible alternative that would be less environmentally damaging. Placement of the bridge within the buffer zone for Wetlands E and I will avoid encroaching onto the numerous and more valuable coastal resources in the vicinity. The bridge will not significantly reduce or adversely impact any sensitive habitat in that all measures to minimize potential impacts to the wetlands buffer will be incorporated into the Project, such as the comprehensive SWPPP.

c. Trails.

Third, the Project includes a network of trails within and along the perimeter of wetland buffer zones. See, Revised Plan. Consistent with the open nature of the Project (which will remain an un-gated community), the CC&Rs for the Project will require that the roads and trails be maintained and remain open to the general public. Trails and scenic overlooks are permitted in wetland buffer zones under Z.O. §§ 18.38.080(E) and 18.38.075 (A) and (E). The trails also qualify as an education activity, which is a permitted use within wetlands and their buffers. Z.O. § 18.38.080 (A) and (E) and § 18.38.075 (A) and (E). Furthermore, the trails involve and foster "passive recreation such as bird-

watching," which is a permitted use within a wetland under Z.O. § 18.38.080(A).

The network of trails easily meets the development standards set forth in Z.O. §§ 18.38.080(G) and 18.38.075(G). The trails will be of 4 feet wide asphalt construction to allow them to be used by cyclists and disabled persons. Exercise/stretch stations will be intermittently spaced throughout the trail system. Portions of the trail network will incorporate fencing to preclude bicyclists and dogs from accessing the remainder of the wetland buffers and any portion of the wetlands themselves. The trails will also be designed so that only minimal vegetation is removed so that no significant impacts occur within the wetland buffers. As such, no replanting activities are expected to be necessary. The natural topography will be undisturbed when constructing the trails within and along the perimeter of the wetland buffer zones. The SWPPP will preclude discharges of toxic substances from the trail. By virtue of the drainage plan and the SWPPP, runoff and sedimentation will not exceed pre-development levels. As compared to the existing cattle grazing currently taking place on the entire Property, which encompasses vast and indiscriminate vegetation removal, trampling on coastal resources and fecal

deposits, the proposed trails would be an environmentally superior replacement activity within the wetland buffers.

In addition, the findings required for development within wetland buffers zones under Z.O. § 18.38.080(H) can be made for the network of trails. Given the numerous coastal resources on the Property, the trails add a valuable recreational and educational component to the Project without impacting coastal resources. The trails are necessary for the proper design and function of homes on the Property, which will require recreational amenities. The trail network will in no way be detrimental to the public welfare, but will serve the public interest. In addition, maintenance of the trails and strategically located fences will ensure that any sensitive habitat is not adversely affected. The trails are consistent with the goals and objectives of the LCP and Chapter 38 of the Zoning Ordinance in that measures will be taken to avoid adversely impacting wetland buffers and will offer passive public recreational opportunities.

d. Extension of Bayview Drive.

Fourth and finally as to wetland buffer zones, the small portion of the Project's circulation network that would connect to any future extension of Bayview Drive onto the

Property will encroach slightly into the buffer zone for Wetland F. This road within the buffer zone is permitted under Z.O. § 18.38.080(E) and § 18.38.075(B) and (E), which, taken together, permit the "improvement, repair, or maintenance of roadways or road crossings." The roadway within the edges of the Wetland F buffer zone qualifies as an improvement. As defined by Black's Law Dictionary, an improvement includes "any permanent structure or other development, such as a street, sidewalks, sewers, utilities, etc." Black's Law Dictionary, Sixth Ed., 1990.

In addition to the above, as a matter of policy, the slight portions of this road within the buffer zone for Wetland F should be permitted as the road is the extension of the long planned Bayview Drive. More importantly, Bayview Drive is also part of the General Plan's Circulation Element as a future road connecting to Foothill Boulevard within the Property. Given such a mandate for Bayview Drive, it would be short-sighted and ill-advised to preclude the Project from connecting to this potential future road.

There is no feasible or practical alternative other than for this road to slightly encroach within the buffer zone

for Wetland F.[7] Every effort has been made to avoid this encroachment; however, avoidance would be impossible without realigning the off-site Bayview Drive, over which Ailanto has no control. Designing this road in a way that would not align with Bayview Drive (if it is constructed) would preclude free-flowing traffic, thus presenting traffic hazards.

In constructing this road slightly within the buffer zone for Wetland F, all development standards under Z.O. § 18.38.080(G) and § 18.38.075(G) are satisfied. The SWPPP and construction contracts will ensure that vegetation removal is minimized to a less than significant level. Grading to construct this road will also be minimized so as to conform to the existing natural topography of the area. The SWPPP will also ensure that erosion potential is minimized to a less than significant level and that toxic substance discharges are avoided. The drainage plan and the SWPPP will ensure that runoff and sedimentation will not exceed pre-development levels. If replanting is necessary, only native and non-invasive exotic vegetation will be used around this proposed road per the landscaping plan.

---

[7] We again reiterate that findings regarding no feasible or practical alternative are not necessary. See, footnote 5, supra.

The construction of the portions of the road within the Wetland F buffer zone also satisfies the required findings for development within wetland buffers under Z.O. § 18.38.080(H). Given the alignment of Bayview Drive off-site (a special condition affecting the Property), the road extending from Bayview must be located as proposed. The road is necessary for access and free-flowing circulation, and is thus necessary for the proper design and function of the Project. The road will not be detrimental to the public welfare or injurious to other properties in the area. As explained above, the road will allow efficient movement of traffic and, thus, enhance safety. The road will not significantly impact sensitive habitats in the vicinity and, as explained above, there is no less environmentally damaging alternative. Accordingly, placement of a very small portion of this road within the Wetland F buffer zone meets the purposes and objectives of the LUP and the Zoning Ordinance.

B. Riparian Corridors on the Property.

The drainages, or riparian corridors, on the Property are shown on the map attached hereto as Exhibit C.

i. Permitted Uses Within Riparian Corridors and Performance Standards for Uses Within Riparian Corridors.

The uses allowed in riparian corridors are education and research, consumptive uses, fish and wildlife management activities, trails and scenic overlooks on public land, necessary water supply projects and restoration of riparian vegetation. LUP Policy 3-8 (Permitted Uses Within Riparian Corridors) and Z.O. § 18.38.075(A). In addition, the LCP permits where there is no feasible or practical alternative, the following uses: stream-dependent aquaculture, flood control projects, bridges when supports are not in significant conflict with corridor resources, pipelines and storm water runoff facilities, improvement, repair or maintenance of roadways or road crossings, and agricultural uses. LUP Policy 3-8(Permitted Uses Within Riparian Corridors) and Z.O. § 18.38.075(B).

There are no uses proposed in riparian corridors other than bridges (including oversized arched culverts) and trail crossings across some of the drainages. See, Revised Plan. As set forth above, bridges are permitted when no feasible alternative exists and when their supports are not in conflict with corridor resources.

There is no feasible or practical alternative other than to construct the bridges over riparian corridors due to the nature and character of the Property and the location of the resources thereon. The LUP specifically singles out the Property for residential development "as an alternative to development of more rural lands and those with significant coastal resources . . . ." LUP, p. 166. (In fact, the LUP states that "[t]here are no significant conflicts with Coastal Act policies or resources presented by development of [the Property]" for residential uses." LUP, p. 137.) Because the Property has five ephemeral drainages bisecting the Property, it is impossible to locate any roads without crossing riparian corridors. For example, Foothill Boulevard, a road mandated by the LCP as a new coastal access and bypass route (See, LUP Policy 10-31 and LUP Access and Circulation Concept Map), cannot be constructed on the Property without crossing these riparian corridors. Moreover, due to length limitations on cul-de-sacs for fire safety reasons, it is necessary to construct the loop road as opposed to numerous roads perpendicular to Foothill Boulevard (this alternative, which is befitting a more standard grid-like development, would also certainly be more invasive to and destructive of coastal

resources on the Property[8]). Thus, there is no feasible or practical alternative other than to locate the bridges over riparian corridors.

The bridge supports will not conflict with corridor resources in that the supports will be located outside the drainage channels and areas supporting riparian vegetation. Moreover, the placement of the bridges, including the oversized arched culverts, will not impact the volume, flow or capacity of water in the drainages, thereby avoiding any impacts to animal movement along the riparian corridors.

The bridges over the riparian corridors readily satisfy the performance standards for development in riparian corridors. See, LUP Policy 3-10(Performance Standards in Riparian Corridors) and Z.O. § 18.38.075(C). In constructing the bridges, the SWPPP and the construction contracts will ensure that removal of vegetation is minimized to a less than significant level. In addition, the riparian crossings have been strategically placed to avoid removal of an important willow community along Drainage 3. Measures to limit land exposure during construction; to use

---

[8] In fact, a standard, grid street tentative map that included 228 homes was approved for the Property in the 1970s. Ailanto chose not to pursue that proposal and instead to design an environmentally superior project, one that takes into account, and designs around, the coastal resources on the Property.

temporary vegetation or mulching, if necessary, to protect critical areas; and to minimize erosion (by appropriately replanting modified areas) will be incorporated into the SWPPP and landscaping plan. The landscaping plan will require that only adapted native or non-invasive plant species be used for any replanting. In terms of measures to protect fisheries, no native or anadromous fish are present on the Property and, therefore, measures to provide for their passage are unnecessary. All runoff from bridges (and even streets) within the Property will be collected and piped to City's stormwater collection network and will not drain into sensitive areas. By constructing bridges and oversized arched culverts that span the length of each riparian corridor crossed, there will be no interference with surface or subsurface water flows in each of the drainages. The construction of bridges will minimize impacts to, and maintain, natural vegetation buffer areas that protect riparian habitats. The SWPPP will also incorporate measures to prevent runoff from adversely affecting vegetation buffer areas that protect riparian habitats. Most of the riparian crossings have been designed occur through non-native and invasive eucalyptus, which are not considered under the LCP to be riparian vegetation that protect riparian habitats. Finally, there will be no alteration of any

natural stream; therefore, the volume, flow and capacity of all water flows within the riparian corridors will remain undisturbed.

With respect to the trail crossings, they are a permitted use within riparian corridors under Z.O. § 18.38.075(A), as are education activities.

ii. Riparian Corridor Buffer Zones.

The Project avoids development within riparian buffer zones (as defined by LUP Policy 3-11(Establishment of Buffer Zones) and Z.O. § 18.38.075(D)), other than bridges to cross riparian corridors, which are permissible as explained above. Specifically, from the "limit of riparian vegetation" (as set forth in LUP Policy 3-7[Definition of Riparian Corridor]), buffer zones of 30 feet for all intermittent streams (i.e., the upper portions of Drainages 1, 2 and 3 and all of Drainage 5) have been established. Where no riparian vegetation exists, buffer zones of 30 feet from the midpoint of intermittent streams (i.e., lower portions of Drainages 1, 2 and 3 and all of Drainage 4) have been established. No perennial streams exist on the Property and therefore, 50 foot buffers required for perennial streams are not relevant to the Project. Nonetheless, a 50 foot buffer has been incorporated along Drainage 4.

iii. Permitted Uses Within Riparian Corridor Buffer Zones and Performance Standards for Uses Within Riparian Corridor Buffer Zones.

There are no uses proposed in riparian corridor buffer zones other than bridges and trail crossings as explained in Section I(B)(i) above. As with riparian corridors, bridges are a permitted use in riparian buffer zones under the LCP where no feasible or practical alternative exists and when bridge supports do not conflict with corridor resources. Z.O. § 18.38.075 (E) and (B). For the reasons set forth in Section (I)(B)(i), there is no feasible or practical alternative other than to locate the bridges through riparian corridor buffer zones,[9] and the bridge supports will not conflict with corridor resources.

The bridges will comply with the performance standards for uses in riparian buffer zones. See, LUP Policy 3-13(Performance Standards in Buffer Zones) and Z.O. § 18.38.075(G). The bridges (including oversized arched culverts) will be constructed and placed in a manner such that vegetation removal will be minimized and adjacent natural topography will be undisturbed within the buffer zones. In addition, the SWPPP will

[9] We reiterate our earlier-stated position that no such "feasible or practical alternative" findings are required for uses in riparian buffer zones that are permitted as a reference to uses in riparian corridors. See, footnote 5, supra.

ensure that vegetation removal, erosion, runoff and sedimentation are minimized or avoided altogether, and that toxic substance discharges are prevented.

As in riparian corridors, trail crossings are a permitted use in riparian buffer zones under Z.O. § 13.38.075(A) and (E). The trail crossings are also permitted as an educational use. The trail crossings will be adjacent to the bridges through riparian buffers, and all measures to ensure that the bridges meet the above performance standards for uses in riparian buffer zones will be incorporated into the construction of the trails. See, Section I(B)(i).

The findings required for development within riparian buffer zones under Z.O. § 18.38.075(H) can be made as to the bridges (including oversized arched culverts) that traverse riparian buffer zones. The numerous riparian areas on the Property present a special circumstance such that avoiding riparian crossings would be virtually impossible. The bridges are necessary for the proper design and function of the Project. Without them, there would be inadequate internal circulation within the Project. The bridges will in no way be detrimental to the public welfare or injurious to nearby properties. In fact, the bridges will be beneficial to public welfare in that the

bridges allow for a proper circulation network within the Project. Bridging across riparian buffers, as opposed to constructing roads at grade, ensures that impacts to any nearby sensitive habitats are avoided. The bridges are consistent with the purposes of the LUP and Zoning Ordinance because they provide a workable circulation network and minimize adverse impacts to coastal resources.

Likewise, the trail crossings within riparian buffer zones satisfy the required findings under Z.O. § 18.38.075(H). Specifically, given the number of coastal resources on the Property, the trails add a valuable educational component to the design of the Project. They will not be detrimental to the public welfare, but rather will enhance public access to and enjoyment of the resources on the Property. The trails will not adversely impact sensitive habitats since fencing will be used as necessary to keep people and pets on the trails, and the trails will be adequately maintained. Accordingly, the trails are consistent with the purpose of the LUP and the Zoning Ordinance.

C. <u>ESHAs on the Property</u>.

LUP Policy 3-1(Definition of Sensitive Habitats) defines environmentally sensitive habitat areas ("ESHAs") as:

> [A]ny area in which plant or animal life or their habitats are either rare or especially valuable and as those areas which meet one of the following criteria: (1) habitats containing or supporting "rare and endangered" species as defined by the State Fish and Game Commission, (2) all perennial and intermittent streams and their tributaries,.(3) coastal tidelands and marshes, (4) coastal and offshore areas containing breeding and/or nesting sites and coastal areas used by migratory and resident water-associated birds for resting and feeding, (5) areas used for scientific study and research concerning fish and wildlife, (6) lakes and ponds and adjacent shore habitat, (7) existing game and wildlife refuges and reserves, and (8) sand dunes. ¶Such areas include riparian areas, wetlands, sand dunes, marine habitats, sea cliffs, and habitats supporting rare, endangered, and unique species.

As set forth in our letter to the Coastal Commission staff on June 24, 1999, consistent with the Coastal Act, ESHAs under the LCP are defined by their ability to support rare, endangered and unique species. See, Public Resources Code § 30107.5.

Under the LCP, none of the wetlands on the Property are ESHAs because, as explained in the Biological Report, based on numerous surveys of the Property, none of the wetlands are known to support rare, endangered or unique species. The agricultural pond is not an ESHA because LUP Policy 3-8(Designation of Riparian Corridors) exempts man-made ponds over 2,500 square feet from being classified as ESHAs.

That none of the wetlands on the Property are ESHAs under the LCP does not afford the wetlands any less protection. As explained in our letter to the Coastal Commission staff dated June 24, 1999, the Coastal Commission, in its Procedural Guidance, recognizes that not all wetlands are ESHAs and discusses a local government's option of either identifying wetlands as ESHAs in its local coastal program or developing its own policies to protect wetlands. Procedural Guidance, p. 61. City, through its LCP, has chosen the latter option as the LCP contains a comprehensive scheme for the protection of wetlands, with which the Project complies, as discussed above.

Unlike wetlands, all riparian areas on the Property are ESHAs by operation of LUP Policy 3-8, which mandates the designation of those riparian corridors shown on the Habitat and Water Resources Overlay and "any other riparian area" as ESHAs.[10]

Thus, the only ESHAs on the Property are each of the five drainages on the Property, as set forth in the map attached hereto as Exhibit C.

---

[10] None of the drainages on the Property, however, support rare, endangered or unique species.

i. Permitted Uses Within, and Protection of, ESHAs.

Under the LCP, only "resource-dependent or other uses which will not have a significant adverse impact in sensitive habitats" are permitted in ESHAs, provided the uses comply with U.S. Fish and Wildlife and California Department of Fish and Game regulations. LUP Policy 3-4(Permitted Uses). In addition, the LCP prohibits development in areas adjacent to ESHAs which would have significant adverse impacts on ESHAs and requires development adjacent to ESHAs to be sited and designed to prevent impacts that could significantly degrade ESHAs. LUP Policy 3-3(Protection of Sensitive Habitats). All uses in ESHAs "must be compatible with the maintenance of biological productivity of such areas." Id.

None of the uses proposed in the riparian area ESHAs will have a significant adverse impact in these areas for the reasons set forth in Section (I)(B). Specifically, by incorporating bridges that span the entire width of riparian channels and that do not constrict water flow or animal movement across riparian corridors, no adverse impacts will occur along or in these areas. Moreover, the Project has been designed to minimize riparian crossings, and development adjacent to these

ESHAs will be sited outside riparian buffers and be subject to restrictive covenants to protect riparian corridors. Furthermore, important riparian vegetation communities have been avoided in revising the Project, such as the willow community along the upper portion of Drainage 3. Moreover, runoff from bridges will be collected and piped to City's storm water collection network, thus avoiding any degradation of riparian corridors.

With respect to wetlands, even assuming that they were ESHAs, which they are not for the reasons stated above, there are no uses proposed within wetlands such that no adverse impacts will result to such habitats. In addition, the Revised Plan includes substantial wetlands buffer zones to protect wetland habitats, and development near the buffers has been designed to avoid any significant adverse impacts on either the buffers or within wetlands. See, Section I(A)(iii).

D. Rare, Endangered and Unique Species.

Z.O. §§ 18.38.085 and 18.38.090 set forth requirements for the protection of rare, endangered and unique species. None of the numerous surveys conducted for the Project indicate the presence of any rare, endangered or unique species (as defined by Z.O. §§ 18.38.085 and 18.38.090) on the Property. Thus, none of

the standards that apply to the protection of these species pertain to the Project.

E. The Project is Consistent with City's Dykstra Ranch Planned Unit Development Ordinance.

Z.O. Chapter 18.16 is the Dykstra Ranch PUD Ordinance and is a part of the LCP approved by the Coastal Commission. To reiterate, the standards set forth in the PUD Ordinance flowed from the Vesting Tentative Map approved by City in 1990, as well as from the mitigation measures set forth in the Final EIR for the Project. See, e.g., Z.O. § 18.16.005. We note again that the PUD Ordinance was part of the LCP's Implementation Plan that the Coastal Commission reviewed and certified as consistent with the Coastal Act and the LUP. As such, the Coastal Commission has already found that the Project was consistent with both the Coastal Act and the LUP.

Even revised, the Project remains consistent with the PUD Ordinance, and is in substantial conformance with the Vesting Tentative Map.

II. Access.

The Coastal Commission staff has asked that we address access to the Project. Terrace Avenue currently abuts the Property and will be used for access to the Project. Future

routes may be available at some point, such as Foothill Boulevard and Bayview Drive. However, the Project is not dependent upon the installation of these future roads, both of which are off-site under the ownership and control of other property owners and are policy matters within the purview of the City.[11]

With respect to Foothill Boulevard, the LCP and all City plans including the Circulation Element of the General Plan require its construction as an alternative coastal bypass route. Accordingly, when the Project was approved, City required the incorporation of Foothill Boulevard along the western boundary of the Property. The Project currently does exactly that by proposing to construct on-site roads that do not depend upon, but could accommodate, a future Foothill Boulevard and by offering to dedicate rights-of-way for a future Foothill Boulevard in the areas where the road could be built in the future, but no Project road would be currently constructed. Thus, if and when City decides to implement Foothill Boulevard outside of the Property, the Project allows for the portion of such future road that would be on the Property. Moreover, in the event that City decides not to proceed with Foothill Boulevard, the Project will suffer no

[11] We note, however, that Ailanto is not adverse to the construction of either or both of these roads.

harm, and no unnecessary on-site roadway will have been built since the Project only involves actual construction of the portions of Foothill Boulevard on-site that are integral to the Project's circulation network. In sum, the Project is in no way dependent upon, nor does it preclude the eventual construction of, Foothill Boulevard.

The situation is similar with respect to Bayview Drive. The Project is not now, and has never been, dependent upon the construction of this street. At the same time, however, Ailanto has no objection to a Project connection to Bayview Drive, if that street is completed in the future. Again, this is a policy issue for the City, but is not truly related to the Project and need not be decided with respect to the Project. In approving the original Project, City required that the on-site portion of Foothill Boulevard connect to Highway 1 via a local connector street. That connector street is Terrace Avenue, over which Ailanto has abutters rights and which will serve the Project without disturbance of coastal resources. Thus, the Project is in no way dependent upon, nor does it preclude, connection of the Property to Bayview Drive in the future.

III. Project Grading.

Changes to the Project's grading plan are set forth in the letter attached hereto as Exhibit E from Ailanto's engineers, McKay and Somps. Changes to the grading plan have been made in order to avoid and minimize development within wetland buffer zones. In some instances, this approach necessitates grading in areas with greater contours and slopes than under the plan approved by the City. However, this slight trade-off further protects coastal resources on the Property.

IV. Drainage Plan.

A description of the changes to the comprehensive drainage plan for the Project is also addressed by the McKay and Somps letter. See, Exhibit F. As set forth in that letter, all drainage from the on-site storm drainage system will flow into the Terrace Avenue Assessment District drainage system. All runoff from the Project would be routed away from the pond to avoid degradation of the pond and adjacent areas. In addition, flood control drainage facilities would be constructed for the pond, further ensuring the maintenance of the pond (and its water quality) and adjacent areas.

IV. Conclusion.

Despite the fact that we strongly disagree with the Coastal Commission staff's legal interpretation on the extent of the Coastal Commission's jurisdiction and the governing rules that apply to the Project, Ailanto has revised its plans to be fully consistent with the applicable provisions of the LCP, as interpreted by the Coastal Commission staff.[12] We hope that you will agree that Ailanto has worked cooperatively and diligently to address staff's concerns, and that you will recommend approval of the Revised Plan to the Coastal Commission.

If you have any questions regarding the foregoing, please do not hesitate to contact the undersigned, Anna Shimko or Yuri Won. We look forward to a December Coastal Commission hearing and to promptly resolving this appeal.

Very truly yours,

CASSIDY, CHEATHAM, SHIMKO & DAWSON,
a Professional corporation

By: _____
Stephen K. Cassidy
Attorneys for Ailanto Properties, Inc.

---

[12] We nevertheless urge you and the Commission to consider the Companion Letter explaining what we believe to be the proper jurisdiction of the Coastal Commission and the correct legal standards that apply to the Project.

CASSIDY
CHEATHAM
SHIMKO &
DAWSON
A Professional Corporation

rcvd 10/4/99

October 4, 1999

Ralph Faust
Chief Counsel
California Coastal Commission
45 Fremont, Suite 2000
San Francisco, CA 94105-2219

Re: Pacific Ridge at Half Moon Bay; Appeal No. A-1-HMB-99-022

Dear Mr. Faust:

This firm represents Ailanto Properties, Inc. ("Ailanto"), with respect to the referenced appeal. On September 2, 1999, we met with several staff members of the Coastal Commission's North Coast District Office, including Ann Cheddar and staff ecologist John Dixon. At that meeting, we discussed various issues raised by the appeal, including questions of the Commission's appeal jurisdiction, as well as how Ailanto might modify the Pacific Ridge project to address the staff's concerns. Our discussions, however, were not conclusive, especially in regard to the issue of wetlands created by and associated with agricultural ponds and reservoirs which are exempted from the Commission's appeal jurisdiction by the Commission's regulation found at 14 Cal. Code of Regs. ("CCR") Section 13577(b)(2). Resolution of this issue is fundamental not only to a final determination of the Commission's appeal jurisdiction, but also to the redesign of Ailanto's project. Since it is critical that we resolve this threshold issue in order to move forward, we are writing this letter to you asking for your views on this issue. Below we set forth the issue in more detail and our legal analysis on this issue for your consideration.

The issue related to Section 13577 (b) (2) of 14 CCR arises from the long-standing existence on the Ailanto property where the Pacific Ridge project is to be developed of an agricultural pond and reservoir. For your information, we enclose a copy of a map of the property delineating wetlands on the property, including the agricultural pond and reservoir. Several wetland areas shown on the map (specifically Wetlands A, E and G) were created either to supply water to the agricultural pond and reservoir (Wetland E) or as a result of runoff and seepage from the agricultural pond and reservoir (Wetlands A and G). The question, then, is whether 14 CCR Section 13577 (b) (2) exempts from the Commission's appeal jurisdiction any or all of Wetlands A, E and G.

Section 13577 (b) (2) of 14 CCR provides as follows:

> For the purposes of this section [establishing the Commission's appeal jurisdiction over wetlands], the term "wetland" shall not include **wetland habitat created by the presence of and associated with agricultural ponds and reservoirs** where:
>
> (A) the pond or reservoir was in fact constructed by a farmer or rancher for agricultural purposes; and
>
> (B) there is no evidence (e.g., aerial photographs, historical survey, etc.) showing that wetland habitat pre-dated the existence of the pond or reservoir. (Emphasis added.)

At our meeting, Coastal Commission staff member Bill Van Beckum postulated that the language set forth in bold above somehow means that the wetland habitat to be exempted must have been actually used for agricultural purposes (i.e., must have a "functional connection" to agriculture) and that since Wetlands A, E and G did not meet this "functionality" test, they were not exempt from the Commission's jurisdiction. We responded that the plain and unambiguous language of this regulation would not support such an interpretation, and that the language of this regulation plainly exempts from the Commission's appeal jurisdiction wetland habitat which would not have existed but for (i.e., was "created by") the existence of an agricultural pond or reservoir. We promised staff that we would set forth our analysis in more detail with supporting legal authority. We analyze the language of the regulation based on the clear meaning of the words used in the regulation, the history of the Commission's adoption of the regulation, the rules of statutory construction, and common sense.

First, we consider, as noted above, the clear words adopted by the Commission: "wetland habitat created by and associated with the presence of agricultural ponds and reservoirs" is exempt. Put another way, these words clearly mean that wetland habitat which would not exist "**but for**" the agricultural ponds and reservoirs that otherwise meet the criteria of Section 13577 (b) (2) is exempt.[1] As established by Ailanto's biological report submitted on June 24, 1999, Wetlands A, E and G on the property would not exist "but for" the agricultural pond, and are therefore exempt. As set out in the biological report and as explained at our meeting with staff, Wetland E was created by diverting an on-site ephemeral stream to supply water to the pond and reservoir. Wetlands A and G were created as a result of seepage from the pond and reservoir (Wetland G) and a breach of the reservoir which created runoff (Wetland A).

---

[1] Without a doubt, the wetland habitat on the property that has been created by and is associated with the presence of the agricultural pond thereon meets the criteria of (A) and (B) in Section 13577 (b) (2). As we established in our June 24, 1999, letter to Commission staff, the agricultural pond was created by a farmer or rancher for agricultural purposes, and there is no evidence at all that the wetland habitat at issue pre-dated the pond (in fact, we have supplied to the Commission affirmative evidence that the wetland habitat did not exist before the pond was constructed).

Related to the plain and unambiguous language of the regulation, and principles of statutory construction under California law, as you are no doubt aware, the cardinal rule of statutory construction requires that a statute (including the regulation here) be interrupted in order to avoid rendering words in the statute surplusage, to avoid defying common sense, and to avoid an absurdity. California Manufacturers Association v. Public Utilities Commission, 24 Cal. 3d 836 (1979); citing Fields v. Eu, 18 Cal. 3d 322 (1976); Sanchez v South Hoover Hospital, 18 Cal. 3d 93 (1976); Stanley v. Justice Court, 55 Cal.App. 3d 244 (1976); Watkins v. Real Estate Commissioner, 182 Cal.App. 2d 397 (1960). We think that Mr. Van Beckum's proposed interpretation would violate this legal principle, contravening the plain meaning of the words used in the regulation. If only those wetlands actually used for (i.e., having a functional connection to) agricultural purposes were exempt, then the exemption would apply only to agricultural ponds and reservoirs. That construction would render superfluous and meaningless the phrase "created by and associated with the presence of agricultural ponds and reservoirs." Under that construction, only agricultural ponds or reservoirs would be exempt. Such an interpretation would be inconsistent with the basic rules of statutory construction.

In order to confirm the validity of our construction of the regulation, we have also inquired into the "legislative history" of the Commission's adoption of Section 13577 (b) (2), including a review of all documents within the Commission's files concerning the adoption in 1980 of the regulation. There is absolutely nothing in the background documents to suggest, infer, or support a view that the Commission intended the exemption to be limited to wetland habitat that was used for agricultural purposes, especially when no wetland habitat would exist "but for" the existence of an agricultural pond or reservoir. The December 28, 1979, staff report to the Commission from the Commission's then-Executive Director, Michael L. Fischer, is included for your reference. On page 4 of that report, after noting that the Commission had been employing the definition of wetlands used by the U.S. Fish and Wildlife Service (USFWS), Mr. Fischer stated, "One difficulty with using the USFWS definition is that it includes all wetlands adjacent to agricultural ponds and reservoirs." In light of the obvious reach of the USFWS wetlands definition, Mr. Fischer recommended that:

> [D]istinctions should be made to exclude wetlands [which would otherwise be included as wetlands under the USFWS definition] created by the presence of and associated with agricultural ponds and reservoirs where: (1) the pond or reservoir was in fact constructed by a farmer or rancher for agricultural purposes, (2) there is no evidence showing that wetland habitat pre-dated the existence of the pond or reservoir, and (3) the wetland is not otherwise included in the Commission's post-LCP certification appeal jurisdiction (i.e., between the sea and the first public road, etc.)

On July 8, 1980, in response to this staff report, the Commission adopted the current regulation (without the third factor suggested in the staff report).[2] Nowhere in the staff report, or anywhere else in the Commission's background records, is there a hint that the exempt wetland habitat must itself have been used for, and have a functional connection to, agricultural purposes. It appears clear that the purpose of the regulation was simply to exclude from the Commission's appeal purview all wetland habitat that evolved as a result of exempt agricultural ponds and reservoirs.

At our September 2, 1999, meeting, it appeared that some confusion may have stemmed from the words "associated with" contained in Section 13577 (b) (2). Seeking clarification (though we believed none was warranted), we turned, as do California courts when interpreting words and phrases, to the Random House Dictionary (1980), which defines the verb "associate" as "to connect or bring into relation." The wetland habitats created by the presence of the agricultural pond and reservoir on Ailanto's property are clearly connected in a biological sense with, and were brought into relation (indeed, brought into being) by, the agricultural pond and reservoir. Hence, they are exempt under Section 13577 (b) (2).

Finally, even if Section 13577 (b) (2) did require wetland habitat to be used for, and have a functional connection to, agricultural purposes in order to be exempt, we note that Ailanto's entire property, including all of the subject wetland habitat, has for decades been used for agricultural purposes. Cattle have wandered the property, freely grazing and drinking. Arguably then, the wetland habitat that exists as a result of the agricultural pond is exempt from the Commission's appeal jurisdiction even on this basis.

We seek your review of our position at your earliest convenience. We would like to come to agreement with Commission staff on this issue in our upcoming meeting on October 8, 1999. Please feel free in the meantime to contact the undersigned, or Yuri Won or Steve Cassidy of this firm.

Very truly yours,

Cassidy, Cheatham, Shimko & Dawson

By: Anna C. Shimko /po
Anna C. Shimko
Attorneys for Ailanto Properties, Inc.

---

[2] This section of the regulations was originally numbered 00199. It was renumbered in 1982 to the current Section 13577.

Enclosures

cc: Jamee Jordan Patterson, Esq.
Steven F. Scholl, AICP
Ann M. Cheddar, Esq.
William Van Beckum
Darryl Rance
Stephen K. Cassidy, Esq.
Yuri Won, Esq.
Robert Henry
Nancy Lucast

CASSIDY
CHEATHAM
SHIMKO &
DAWSON
A Professional Corporation

October 29, 1999

RECEIVED
OCT 29 1999
CALIFORNIA
COASTAL COMMISSION

VIA HAND DELIVERY

Steve Scholl
Chris Kearn
California Coastal Commission
45 Fremont Street, Suite 2000
San Francisco, CA 94105

Re: Pacific Ridge; Appeal No. A-1-HMB-99-022

Dear Messrs. Scholl and Kearn:

In our separate letter, dated October 29, 1999, on behalf of Ailanto Properties, Inc. ("Ailanto"), we set forth the consistency of the revised Pacific Ridge project (the "Project") with the relevant portions of the City of Half Moon Bay's Local Coastal Program ("LCP"). We submit this companion letter to explain our disagreement with the Coastal Commission staff's legal interpretations on the extent of the Coastal Commission's jurisdiction and of various LCP policies and requirements.

In our other October 29, 1999, letter, we analyzed the Project's consistency with the LCP based on the Coastal Commission staff's interpretation of jurisdictional issues and various LCP policies solely for the purpose of showing the Project's consistency with the LCP. However, we strongly

Attorneys at Law
20 CALIFORNIA STREET, SUITE 500, SAN FRANCISCO, CA 94111 TELEPHONE: (415) 788-2040 FACSIMILE: (415) 788-2039

disagree with the Coastal Commission staff's interpretation on key legal issues pertinent to the referenced appeal. We are particularly alarmed that the Coastal Commission staff has chosen improperly to ignore the plain language of the Coastal Act and the regulations thereunder (at 14 Cal. Code of Regs. § 13000 et seq.; the "Regulations"), as well as past practices of the Coastal Commission, that limit the Coastal Commission's jurisdiction on this appeal. In addition, the Coastal Commission staff has interpreted certain buffer zone requirements of the LCP in a manner not supported by the LCP itself. We set forth below the basis of our objections.

I. The Coastal Commission's Jurisdiction on This Appeal is Limited.

A. The Coastal Commission Has Jurisdiction Only Over Development Within 100 feet of Certain Wetlands and Streams on the Project Site.

The Coastal Commission staff has taken a new position unsupported by law or precedent that, in this appeal, the entire Project is subject to the Coastal Commission's jurisdiction *de novo*, not just the 100 feet of development within the wetlands and streams on Project site (the "Property"), as staff initially

indicated to us.[1] This position is erroneous and contrary to the plain language of the Coastal Act and the Regulations.

The entire Property is located east of Highway 1, the first road parallel to the sea in the City of Half Moon Bay. Coastal Act § 30603 provides that after certification of its LCP, a local government's action on a CDP application is appealable only for certain types of developments, including projects located between the sea and the first public road paralleling the sea and other developments located "within 100 feet of any wetland, estuary or stream." Public Resources Code § 30603(a) and (b). The Coastal Commission has heretofore properly interpreted the latter appeal jurisdiction under § 30603 of the Coastal Act to include only those elements of proposed development that are located within 100 feet of a wetland, estuary, or stream where the development is located east of the first road paralleling the sea.

Consistent with this interpretation, the Regulations provide a scheme to determine the exact boundaries of the Coastal

---

[1] We find the Coastal Commission staff's newfound interpretation of the Coastal Act surprising and alarming in that staff has maintained from the outset of this appeal that the Coastal Commission has jurisdiction only over development within 100 feet of wetlands, estuaries and streams since the Property lies east of Highway 1. In point of fact, Steve Scholl was quoted and paraphrased in a newspaper article in the Half Moon Bay Review, dated September 8, 1999, as having said exactly that.

Commission's jurisdiction on appeal that is clearly rooted in the mandates of Coastal Act § 30603. See, Regulation § 13577(Criteria for Permit and Appeal Jurisdiction Boundary Determination). The Regulations provide that for streams, the precise jurisdictional area is determined by measuring "100 feet from the top bank of any stream mapped by USGS on the 7.5 quadrangle series, or identified in a local coastal program." Regulations § 13577(a). Similarly, for wetlands, the Regulations provide that the precise jurisdictional area is determined by measuring "100 feet from the upland limit of the wetland." Regulations § 13577(b). Regulation § 13577 does not provide, as the Coastal Commission staff urges, that the entirety of any development that happens to contain a wetland, stream or estuary is subject to the Coastal Commission's appeal jurisdiction.

The Coastal Commission staff interpretation completely ignores the Coastal Act's differentiation between development located within and outside of the area between the sea and the first road parallel to the sea. Moreover, staff's interpretation is unequivocally inconsistent with and contrary to the plain language of Regulation § 13577. Under staff's interpretation, the entirety of any project located outside of the first road

paralleling the sea would (as with any project within the first road paralleling the sea) be subject to the Coastal Commission's jurisdiction on appeal *de novo* so long as any part of the overall property contained a wetland, estuary or stream, regardless of whether any development was taking place within 100 feet of the jurisdictional coastal resources. That is not what the Coastal Act, or the Regulations, state.

The Coastal Commission staff's interpretation is not only contrary to the plain language of the Coastal Act, but we understand that it is wholly inconsistent with the Coastal Commission's long-established precedent as well.

B. Certain Wetlands on the Property Are Exempt From The Coastal Commission's Jurisdiction.

The Coastal Commission staff has also opined that all wetlands on the Property are subject to the Coastal Commission's jurisdiction on appeal, contrary to a very clear exemption provided by the Regulations. Under the Regulations, wetlands created by the presence of and associated with agricultural ponds are exempt. Specifically, Regulation § 13577(b) states, in relevant part:

> For the purposes of this section [establishing the Commission's appeal jurisdiction over wetlands], the term "wetland" shall not include wetland

> habitat created by the presence of and associated with agricultural ponds and reservoirs where:
>
> (A) the pond or reservoir was in fact constructed by a farmer or rancher for agricultural purposes; and
>
> (B) there is no evidence (e.g., aerial photographs, historical survey, etc.) showing that wetland habitat pre-dated the existence of the pond or reservoir. Areas of drained hydric soils that are no longer capable of supporting hydrophytes shall not be considered wetlands.

As we have made clear to staff in our prior letters, dated June 24, 1999, and October 4, 1999, and have discussed in detail at meetings with staff members, certain wetlands on the Property were created by the presence of and associated with a large agricultural stock pond located on the Property. Specifically, Wetlands A, E, and G (as identified in the map submitted herewith at Exhibit A) are exempt under Regulations § 13577 because they were unequivocally created by the presence of and associated with the agricultural pond and there is not a scintilla of evidence that these wetlands pre-dated the existence of the pond (in fact, we have submitted proof positive evidence that these wetlands did not exist prior to the construction of the agricultural pond on the Property). Yet the Coastal

Commission staff has chosen to ignore (indeed, effectively to rewrite) this limitation, stating that no wetlands on the Project site are exempt because this exemption applies only when a property will continue to be used for agriculture, but not when residential development is proposed. Such a preposterous and unsupportable interpretation that arbitrarily adds requirements to the plain language of § 13577 of the Regulations should not be allowed to stand.

C. The Coastal Commission's Jurisdiction In This Appeal Is Limited to the Area Within 100 feet of Wetlands B, C, D, F, F1, and H, and Drainage 3.

Based on the clear legal framework and requirements set forth above, the only areas subject to Coastal Commission jurisdiction are Wetlands B, C, D, F, F1, and H, as well as Drainage 3, as described in the map attached hereto as Exhibit B, and the development within 100 feet of these resources. See, also, Letter to Steve F. Scholl, et al., from Stephen K. Cassidy, dated June 24, 1999.

II. The LCP Requires Wetland Buffer Zones Only for Lakes, Ponds and Marshes.

The Coastal Commission staff has stated to us that the LCP requires 100 foot buffer zones around all wetlands on the

Property. This position is contrary to the plain language of the LCP.[2]

The LCP's Land Use Plan ("LUP") Policy 3-11(c)(Establishment of Buffer Zones) requires a 100 foot buffer zone from the high water point of "lakes, ponds and other wet areas," except man-made agricultural ponds and reservoirs. Zoning Ordinance ("Z.O.") § 18.38.080(D) (part of the LCP certified by the Coastal Commission) implements Policy 3-11(c) and requires a 100 foot buffer surrounding "lakes, ponds and marshes," measured from the high water point, except for man-made agricultural ponds and reservoirs. Thus, <u>only</u> lakes, ponds (except certain agricultural ponds) and marshes require a 100 foot buffer.

The only lakes, ponds or marshes existing on the Property are Wetland A and the agricultural pond; however, even under the staff's interpretation, the agricultural pond is exempt from the Commission's jurisdiction under Zoning Ordinance § 18.38.080(D), which does not require buffers around agricultural ponds, because the pond will continue to be used for

---

[2] We reiterate our position that Wetlands A, E and G are exempt from the Coastal Commission's jurisdiction.

agricultural purposes -- a community garden.[3] The Project incorporates a 100 foot buffer around Wetland A, except where a permitted emergency vehicle access road ("EVA") encroaches slightly within the buffer zone.

A map of what we believe are the legally required buffer zones around those wetlands and riparian corridors subject to the Coastal Commission's jurisdiction is set forth on Exhibit B, attached hereto.

III. Conclusion.

In view of the fact that staff's legal interpretations involve important issues affecting this and future developments, we urge staff to reconsider its interpretations and, failing alteration of staff's view, request that the Commission consider these issues prior to finalizing any determination about the Project. If you would like to discuss these issues further,

---

[3] Wetland A is one of the wetlands that we maintain was created by the presence of and associated with the agricultural pond and is thus exempt from the Coastal Commission's jurisdiction under Regulations § 13577.

please do not hesitate to contact the undersigned, Anna Shimko or Yuri Won.

Very truly yours,

CASSIDY, CHEATHAM, SHIMKO & DAWSON,
a Professional corporation

By: _____
Stephen K. Cassidy
Attorneys for Ailanto Properties, Inc.

cc: John Dixon
Ann Cheddar
Robert Henry
Nancy Lucast
Steve Foreman
Anna Shimko
Yuri Won

From: George Carman and Eleanor Wittrup
657 Terrace Avenue
Half Moon Bay, CA 94019

RECEIVED
NOV 1 6 1999
CALIFORNIA
COASTAL COMMISSION

To: Mr. Jack Liebster
California Coastal Commission
45 Freemont, Suite 2000
San Francisco, CA 94105

November 15, 1999

Dear Mr. Liebster:

The following materials are attached:

Letter of 11.15.99 from George Carman and Eleanor Wittrup summarizing known remaining problems with proposed development of Dykstra Ranch.

Letter of 11.11.99 from Planning Commissioner Mike Ferreira to Half Moon Bay Fire Chief Ron Delgado, referencing attached "Standards for Access Roads and Turnarounds" revised 05.18.98.

Letter of 11.15.99 from Eleanor Wittrup responding to Bob Henry's letter of 11.05.99 to City Manager Blair King regarding Foothill Blvd.

In addition you requested clarification of the expiration of the planned unit development (PUD) for Dykstra Ranch. Attached you will find excerpts from the Municipal Code. Section 18.16 **Dykstra Ranch Planned Unit Development** bears a date of 01.04.94. Section 18.15.045 C **Expiration of the Planned Unit Development Plan** states that "a Planned Unit Development Plan shall expire two years after effective date unless a building permit has been issued, construction diligently pursued, and substantial funds invested." These dates suggest that the Dykstra PUD expired on 01.05.96.

In addition you requested an electronic copy of the Land Use Plan Policies. We understand that one is available which we will email to you as soon as it is available.

Please keep us posted on any further developments. In particular please keep us informed as to any legal opinions relevant to this appeal.

Please feel free to contact us if we can be of further assistance.

George Carman and Eleanor Wittrup
657 Terrace Avenue
Half Moon Bay, CA 94019

Mr. Jack Liebster
California Coastal Commission
45 Freemont, Suite 2000
San Francisco, CA 94105

November 15, 1999

Dear Mr. Liebster:

We have reviewed the proposed changes to the vesting tentative map for the Dykstra Ranch planned unit development (Pacific Ridge at Half Moon Bay, Ailanto Properties, October 26, 1999). We are encouraged to see that the applicant has redesigned the project to avoid gross violations of our Local Coastal Program and the Coastal Act. However, we find many problems and issues remain unresolved, as summarized in the following outline and attached annotated map.

1. Lots 3-11 intrude into riparian area or its buffers
2. Buffers required for offsite wetlands on adjacent property
3. Lots 11-15 are on slopes in excess of 25 degrees; grading?
4. Lots 22 and 11 are flag lots and not permitted; minimum 30 foot frontage required.
5. If park dedicated (deeded) to Cabrillo Unified School District, will it still be a public park? If so, how accessed?
6. Grading and pad construction are destructive to habitat; all lots should be at existing grade
7. Extension of Terrace Avenue to Foothill would cross riparian buffers; no feasible alternative
   Connection of Terrace Avenue to Foothill violates vesting map and Dykstra Ranch Zoning Ordinance
8. Buffers required for offsite spring fed wetland on adjacent property
9. E.g. lots 37-59 buildings whose tops exceed 160 foot elevation will obstruct protected scenic resources / views
10. Migration corridors between drainages and wetlands are required for endangered species
11. Lots 42-45, 53-59 are on slopes in excess of 25 degrees; grading?
12. Are open space areas usable? Slopes are hazardous and recreational use would lead to erosion.
13. Lots 63-77, 84-94 violate buffer zones for riparian habitat (drainage, trees, raptor habitat)
14. Unnecessary road through riparian corridor
15. Restrictions needed to preserve wetlands / buffers from degradation in the name of fire hazard control (i.e. no grading, disking, mowing, draining, etc. within wetlands and buffer zones).
16. Do roads on site meet 30' or 36' width standards for emergency vehicle access?
17. Foothill Blvd. and road encroaches on wetland buffer zone; suggest changing alignment to avoid buffers
18. Sidewalks / paths encroach upon buffer zones
19. How much open space is available to the public? Space fenced off from public access is not open. 20% LCP policy 9-12
20. Lots 108-114 are on slopes in excess of 25 degrees; grading would interfere with spring-fed wetland below dam.
21. No geological or engineering reports on the effect of road construction and placement on the earthen dam. Road on dam encroaches on wetland and riparian buffer zones.
22. Are there willows here? Is this a riparian area?
23. Lots 115, 116, 118 are flag lots and not permitted; minimum 30 foot frontage required.
24. Eastern end of Grandview is a single lane dirt road hemmed in by wetlands on both sides.
25. Grade of roads exceeds 15% slope maximum permitted for emergency vehicle access.
26. Lots 119-125 encroach on riparian buffers; lots are on slopes in excess of 25 degrees; grading?
27. A community garden fed by an irrigation pump draining wetlands is not an agricultural use of the pond.
28. Sidewalks are not permitted within buffer zones.
29. Lots 135-141 are on slopes in excess of 25 degrees.
30. Lots 143-146, 150 are on slopes in excess of 25 degrees.
31. Lots 128-134 intrude into riparian areas and their buffer zones (drainage, trees, raptor habitat).

Mr. Jack Liebster
California Coastal Commission
November 15, 1999

The proposal to use title restrictions and the Homeowner Association to enforce and monitor environmental conditions of approval is not acceptable. An independent organization chartered to manage the open space and environmentally sensitive areas is needed, e.g. Midpenninsula Regional Open Space District. The ongoing costs for management should be funded through assessment on homeowners.

Given the new information and changing circumstances, the revisions already made to the project, together with the additional modifcations required for compliance under HMB LCP and CEQA, would result in a project inconsistent with the vesting tentative map. We therefore urge the Coastal Commission to encourage the applicant to abandon any claim to rights under the vesting tentative map, which has expired, and agree to conform to the requirements of Measure A and Measure D growth ordinances. The building allocations available (3% per year under Measure A, 1% per year under Measure D) could be entirely allocated to development of infill lots with little or no environmental, scenic, and traffic impacts. The developer would be given fair and equal opportunity to build along with all the other landowners in Half Moon Bay.

Alternatively, we encourage the Coastal Commission to consider denial of Coastal Development Permit so that we may begin negotiations to acquire and dedicate the property as open space in perpetuity. The eastern foothills form the scenic backdrop of Half Moon Bay as viewed from Highway 1 and the coastal beaches. Permitting this development will irrevocably destroy environmental habitat and scenic resources which are unique to the area and add much charm and character to the City. Permitting this development will also result in additional and unmitigatable traffic impacts which will impede access of both residents and visitors to the Coastside. Creation of a passive use open space preserve would be the best use of this beautiful land given the abundance of infill lots available for development as housing, and the desire to limit both the rate of growth and total number of houses in the present and future Land Use Plans and Local Coastal Programs.

Sincerely,

George Carman

Pacific Ridge
at
Half Moon Bay

Site Plan
151 UNITS

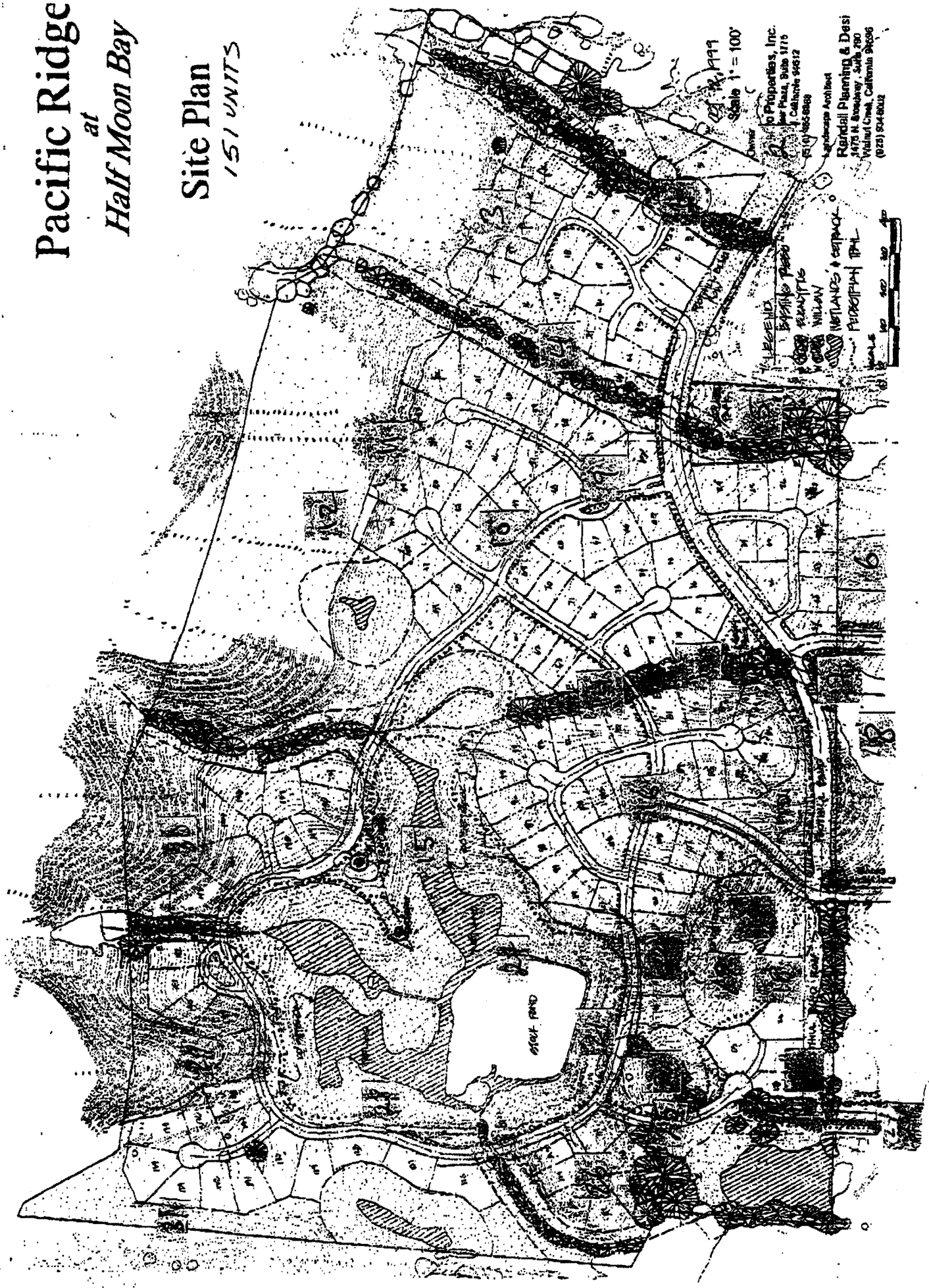

Mike Ferreira
361 Cypress Point Road
Half Moon Bay, Ca 94019

Half Moon Bay Fire Department
1191 Main Street
Half Moon Bay, Ca 94019

November 11, 1999

Attn: Ron Delgado, Fire Chief
Clayton Jolley, Fire Marshal

Dear Sirs,

Thank you very much for our very informative meeting of November 10, 1999, and also for providing me with a copy of the Department's "Access Roads & Turnarounds" specifications. Following are some of the key points of our discussion for which I would appreciate your written confirmation:

1.) Various issue points relative to the Pacific Ridge subdivision have been discussed with the Department over the years, but no official approval has been granted by the Department.

2.) The Department's minimum standards for emergency access to a subdivision require two entrances; the Primary to be a permanent freely accessible access, and the other to be an Emergency Access not necessarily available to the public but readily available to the Department and capable of supporting the Department's vehicles.

3.) Properly specified and implemented "Grasscrete" is an acceptable paving for an Emergency Access road.

4.) Some combination of Bayview and Terrace as Primary and Emergency entrances to the Pacific Ridge subdivision seems to be the preferable plan as Foothill appears to be defunct and Grandview is only a single lane dirt road incapable of supporting Department vehicles.

5.) It would be preferable to the Department that a "Grasscrete" Emergency Access not be routed through a Wetland, a Riparian, or the Setbacks of either as the Department would require periodic mowing of the "Grasscrete" and the Department would not want such necessary activity to be an ongoing source of environmental controversy.

I would appreciate your written confirmation - or expansion - of the above items in order that I not carry forward in error and, once again, please accept my thanks for your patient explanations of Department policy and regulations.

Best Regards,

Mike Ferreira

Half Moon Bay Fire Prevention Bureau

Standard Details and Specifications Manual

Section:	Response	Effective:	Feb. 4, 1997
Title:	Access Roads & Turnarounds	Revised:	May 18, 1998
Number:	FPB-2-1	Approved:	Ronald A. Delgado

Purpose:

The purpose of these requirements is to provide sufficient access for Fire Department apparatus and other emergency vehicles and to insure adequate room for these vehicles to safely turn around. The following are the basic requirements for access road widths in the Half Moon Bay Fire District. Access roads widths shall be maintained to these standards at all times.

General:

Roads that do not meet the specifications of the District can result in a delayed response from the Department due to difficult access for apparatus. Any delayed response can result in a major impact on the property involved or the person having a fire, rescue or medical emergency.

Procedure:

ACCESS ROAD REQUIREMENTS:

Fire apparatus roads shall be provided for every facility, building or portion of a building constructed or moved into or within the Half Moon Bay Fire Protection District.

- Access roads shall be in place before framing construction can begin.
- All access road and bridge improvements required under this standard shall be made prior to permit approval or as a condition of permit approval.

ACCESS ROAD SPECIFICATIONS

CLEARANCE: Fire apparatus access roads, for all occupancies, shall have an unobstructed vertical clearance of not less than 14 feet 7 inches. The Chief, on a site-specific basis may determine if a modification to minimum street height and width requirements can be allowed.

Obstruction of the road widths as required below, including the parking of vehicles, shall be prohibited as required by the Uniform Fire Code.

AGRICULTURAL STRUCTURE IE; BARN, SHED, GREENHOUSE, ETC.

A minimum of a 12' foot wide road with turnouts located at a maximum of every 500 feet on center as measured from the structure to the nearest maintained public road.

Turnouts are required to be a minimum width of 12' feet and a minimum length of 30' feet, with 15' foot tapers to provide a minimum 24' foot wide roadway.

SINGLE DWELLING UNIT

A minimum of a 16' foot wide road, curb to curb, no parking either side and a turn around if a dead end road exceeds 150 feet. Widths shall be increased, when in the opinion of the Chief, roads are not adequate to provide fire apparatus access.

TWO OR MORE DWELLING UNITS AND ALL OTHER USES OTHER THEN SUBDIVISION

A minimum of a 20' foot wide road, curb to curb, no parking either side, sufficient off street parking must be provided and fire lanes must be posted.

A minimum of a 30' foot wide road, curb to curb - parking on one side only and fire lanes must be posted.

SUBDIVISION

A minimum of a 30' foot wide road, curb to curb - parking on one side only and fire lanes must be posted.

A minimum of a 36' foot wide road, curb to curb - which allows for parking both sides and two-way traffic.

SURFACE:

Fire apparatus access roads shall be designed and maintained to support the imposed loads of fire apparatus and shall be provided with a surface so as to provide all weather driving capabilities.

The surface as a minimum shall be a Class II aggregate base, compacted to 95% with penetration coat of liquid asphalt for private access roads and minor subdivisions.

Calculations for design shall bear the wet stamp and signature of a California registered engineer licensed for such design work.

GRADE:

Fire access roads should not exceed a grade of more than 15 percent. Grades may be increased on a site-determined basis, however additional requirements may be required such as asphalt concrete paving as a condition of approval.

Access road grades of more than 15 percent may not exceed 200' feet of contiguous length. Drainage details shall conform to current engineering practices, including erosion control measures.

TURNING RADIUS:

Inside and outside turning radius for fire apparatus will be based upon the capability of the fire apparatus used by the Half Moon Bay Fire Protection District.

DEAD ENDS & TURNAROUNDS:

Any deadend access road more than 150' in length must be provided with a turnaround which meets the specifications of the Half Moon Bay Fire Protection District. Turnarounds shall be located within 100' feet of any structure at the dead end. Travel distance of emergency vehicles within a dead end street shall not exceed 500' feet without a turnout as shown on Half Moon Bay specifications. Turnarounds shall have no more than a 7% grade within the turnaround. (See attached)

VERTICAL CLEARENCE:

All access roads shall have an unobstructed vertical clearance of 14 feet and 7 inches.

ADDITIONAL SPECIFICATIONS

HYDRANTS:

Any dead end road greater than 300' long will require a hydrant at the turnaround nearest the structure.

BRIDGES:

Bridges shall be as wide as the road being serviced and meet a minimum load bearing capacity of 25 tons. Width requirements may be modified only by the Chief and shall be determined on a site-specific basis.

Bridges served by 12' access roads shall be with turnouts at each bridge approach.

Bridge capacity shall be posted and shall be certified every five years by a licensed engineer.

GATE ACCESS:

Gates to all newly constructed buildings or facilities shall be maintained operable for emergency personnel use.

Gates shall be a minimum of 2 feet wider then the access road or driveway they serve.

Overhead gate structures shall have a minimum of 14' 7" vertical clearance.

Mechanically operated gates shall have a Knox switch provided for fire department access and manual gates shall have a breakaway lock installed for fire department access or be provided with a Fire Department lock.

MAINTENANCE:

All private access roads, driveways, turnarounds, gates and bridges are the responsibility of the owners of record and shall be maintained to ensure that the fire department has safe and expedient passage at all times.

Access roads and structures shall be inspected by the fire department as often as necessary in order to verify that the access road is maintained and there has not been any change in occupancy (use) in the structure.

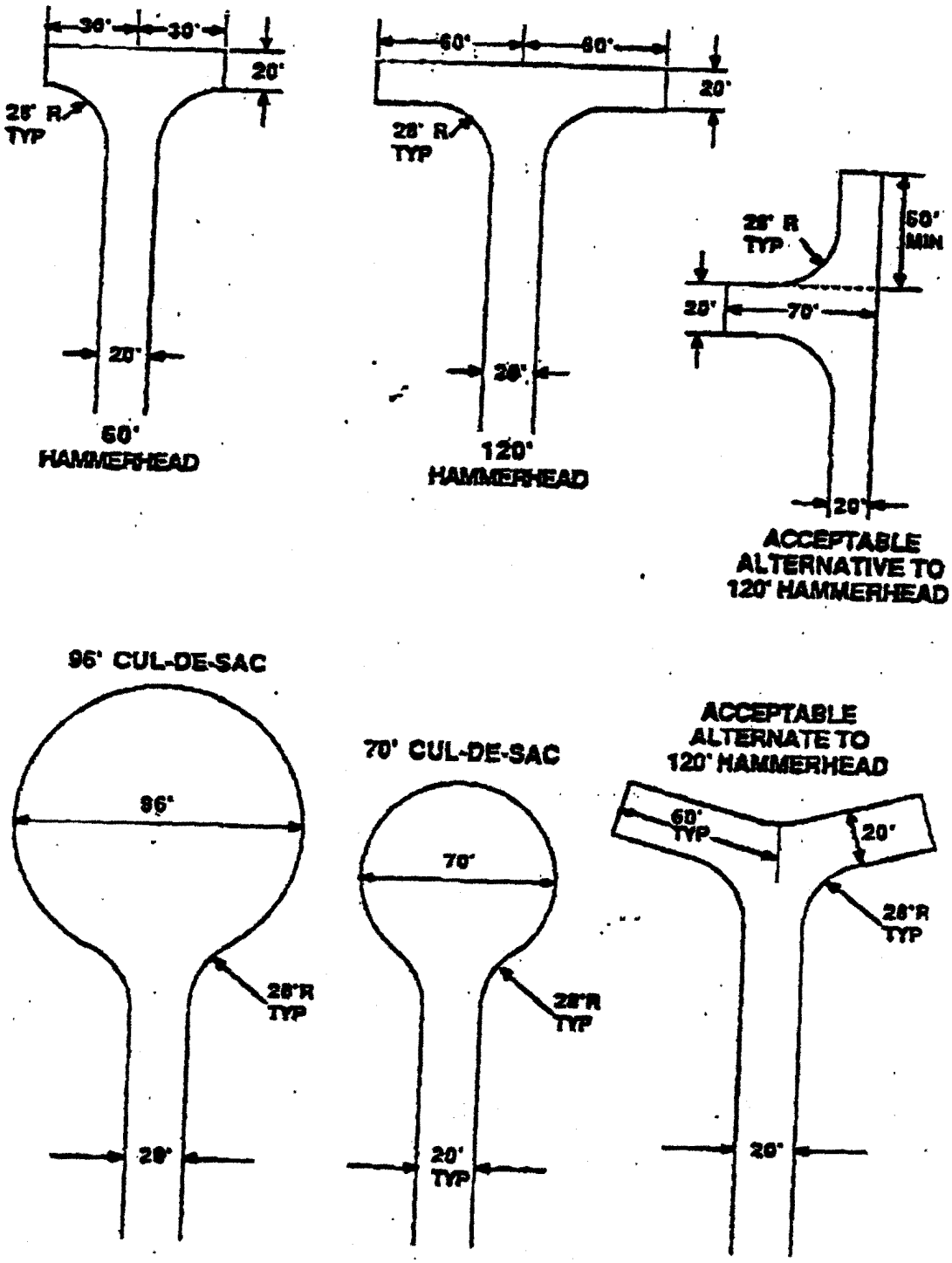

RECOMMENDED TURNAROUNDS

H.M.B. FIRE DISTRICT
PREVENTION BUREAU

Minimum Turnaround Configurations For Fire Apparatus

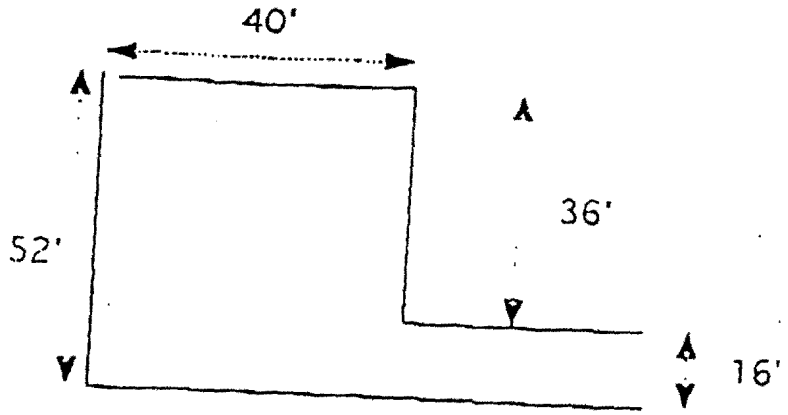

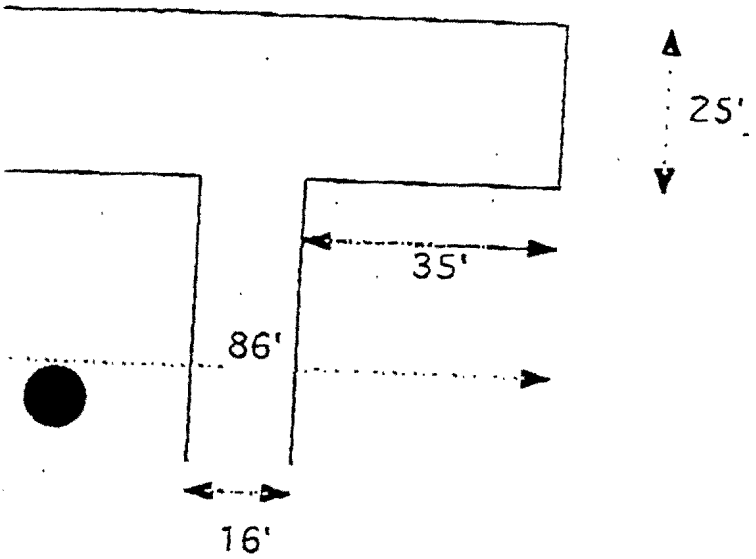

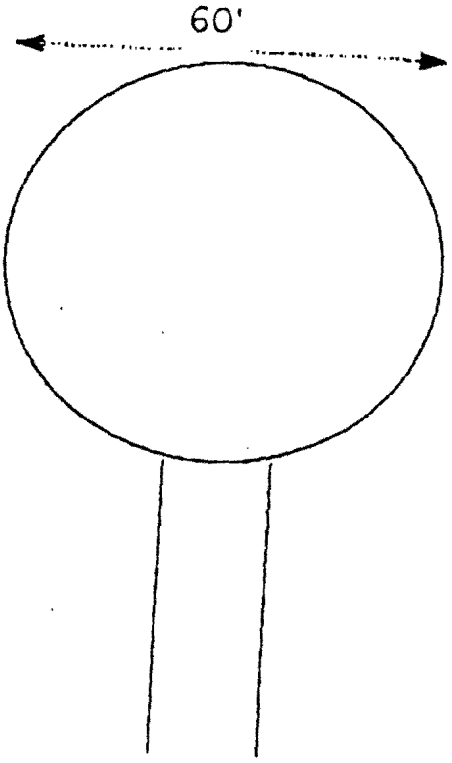

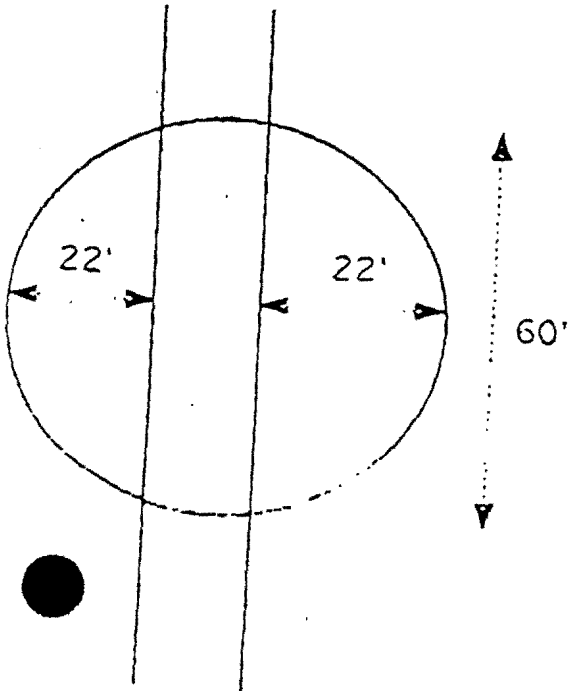

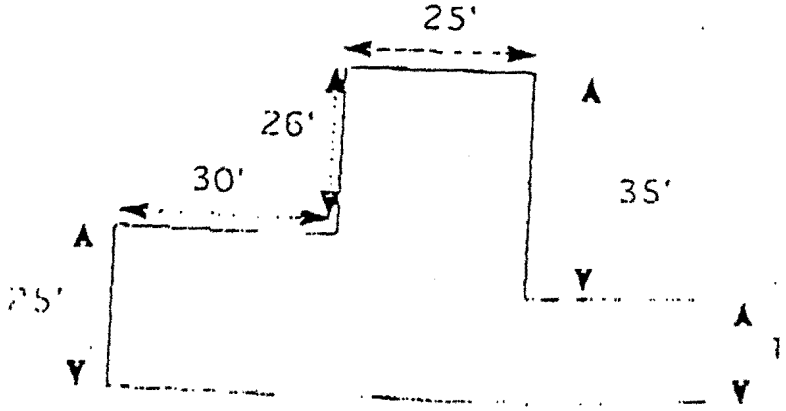

Eleanor Wittrup
657 Terrace Avenue
Half Moon Bay, CA 94019

RECEIVED
NOV 1 6 1999
CALIFORNIA
COASTAL COMMISSION

Mr. Jack Liebster
California Coastal Commission
45 Freemont, Suite 2000
San Francisco, CA 94105

November 15, 1999

Dear Jack:

Enclosed please find a letter from Mr. R. Henry to Blair King dated Nov. 5, 1999 on the subject of the proposed Foothill Blvd. Since Mr. Henry does not cite his source I looked into it. There is some discussion of Foothill Blvd. on p.130 (Chapter 9.2 Planning Issues, subheading 3 "Contiguous Unsubdivided Lands Without Significant Resource Value.") This is not a policy, or even a part of a policy of the LCP. Clearly the discussion in this section is moot, as it is entirely premised on the assertion that "There are no significant conflicts with Coastal Act policies or resources presented by development of this area." The Commission has yet to make a finding on this, and circumstances relative to existing conditions have altered dramatically since this was written. LCP's are supposed to be reviewed every five years, ours has not been reviewed since its approval in the early 1980's. Indeed, had Mr. Henry read all the way to the end of section 9.2, in section 7, Summary of Proposed changes in Development Capactity...., he would see that the projections in the earlier section are to be revised downward to accomplish the purposes of the plan. (p.135.) These projections are clearly subordinate to the goals of the Coastal Act and LCP on Coastal preservation.

There is a policy about Foothill Blvd. It is Policy 10-31(p.203) which reads:

> The city will require participation in an assessment district for properties for which new development is approved in accordance with this Plan along the designated Foothill Boulevard alignment, as indicated on the Land Use Plan Map, in order to provide funding for this new coastal acces and bypass route. This roadway shall provide for through-traffic and local street connections shall be minimized to the extent feasible and on-street parking shall not be allowed.

The construction of Foothill is clearly subordinate to, and in the service of, the new development in Dykstra Ranch, Glencree, and Beachwood. None of which have CDP's as yet. This policy is curious in a number of ways, most notably for mandating a road to serve three developments, but calling it "new coastal access" and emphasizing through-traffic. What coastal resource does it provide access to? While Foothill is proposed to solve a problem in the LCP, it is not mandated. The policy in section 10 seems to me to make the funding and thus the approval of this road contingent on the approval of residential developments. In any case, since it is still an issue "in

play" at the City and the City Council has not acted on it, the Coastal Commission cannot yet take jurisdiction. No decision at the City, no appeal to the Commission.

My guess is that such an appeal would not result in Foothill being approved. If Mr. Henry had ever walked the site of the proposed Foothill Blvd. he would have found it clearly would require filling wetlands, which is not allowed to create access for residential development. It is mentioned in 9.3.7 (p.161) "Dykstra Ranch" where after discussion the site's landslide potential it says:

> Residential development...could also contribute to improvement in local traffic circulation by contributing to the development of a new collector road parallel to Highway 1. However, such development must conform with prote tion of views of the hillside, avoidance of hazards, and minimum alteration of natural landforms... Such development should occur in a manner which minimizes conflicts with Coastal Act policies with respect to preservation of the natural environment and hillside and watershed protection and promote achievement of policies on improved coastal access.

While no EIR has been forthcoming on the proposed Foothill Blvd. (a mysterious case to be sure...) it is clear from the number of places where cat-tails and willow grow along its course that there are substantial environmental issues.

In view of the fact that the removal of Foothill from the circulation element of the general plan revision is supported by the finding that it will not help, but would in fact further degrade traffic conditions on Highway 92. I have yet to see any evidence to suggest that it would help the traffic situation on Highway 1. The EIR for Dykstra Ranch found significant unmitigatable impacts on traffic in 1988 even with Foothill. So it seems the burden of proof is on Mr. Henry to show how it helps.

While Mr. Henry raises many pertinant issues and concerns, he presents no evidence or argument that Foothill would do anything to help solve the problems. Indeed, the planning commission and the circulation subcommitte found clear evidence that it would make them worse. If Mr. Henry lived here and had participated in the revisions to the General Plan he would know all these things. If and when the City Council makes a decision about whether to build Foothill Blvd. then the Coastal Commission should take it up. Until then it remains in the hands of the City.

Sincerely,

Eleanor Wittrup

Eleanor Wittrup

AILANTO PROPERTIES, INC.
ONE KAISER PLAZA / ORDWAY BUILDING / SUITE 1775
OAKLAND, CA 94612 • (510) 465-8888 • FAX (510) 465-5704

November 5, 1999

Mr. Blair King, City Manager
City of Half Moon Bay
501 Main Street
Half Moon Bay, CA 94019

Re: Foothill Boulevard

Dear Blair:

I have recently read the City's Draft Circulation Element dated 9/23/99 which was reviewed by the City Council on 10/19/99. I was quite surprised to find that Foothill Boulevard has been deleted as a proposed road to parallel Route 1. As you know, Ailanto has designed the Pacific Ridge project to allow for a possible future connection at Foothill, but we do not consider Foothill mandatory for our access requirements. However, our concerns relate more towards City policy and traffic planning goals. In that regard, we believe the City would be making a grave error in removing this road from the Draft Circulation Element for the following reasons:

- Foothill has been mandated by the Coastal Commission as providing an *alternate access to coastal resources* and was certified as part of the LCP accordingly. Removing Foothill without a parallel replacement, violates the requirements and spirit of the Coastal Act.
- Foothill fulfills the City's circulation element criteria for "*safe* and convenient access for local and recreational traffic . . . to and from the downtown." The Chief of Police has issued formal notice in the 10/19/99 Council meeting, of the *life safety issues* that are violated by not having a road parallel to route 1 like Foothill. In addition to the issues Chief Wicks has raised, Foothill would provide a secondary emergency access to the High School.
- The removal of Foothill is in disregard for the Draft Circulation Element's own stated policies and goals. Goal # 1 states that, "The City shall provide a functional and cohesive transportation network to support existing and planned uses, and where feasible, *link existing and future residential neighborhoods with the Downtown* . . ." Goal # 4 states that, "The City shall plan for the implementation of circulation infrastructure *to reinforce areas targeted for growth* . . ." (Emphasis mine.) The removal of Foothill is in utter disregard for these policy goals and objectives.

- The City has a long history where its actions and funds spent for studies show its support for Foothill. In fact, on July 21, 1998, the City Council gave direction to the staff by voting to "proceed with the construction, via a Benefit Assessment District, of Foothill from North of the Route 92 intersection to the Pacific Ridge subdivision . . ." Except for the Council's removal of the intersection from the scope of work for the widening of Route 92, the City has not taken any further action to negate this direction. In fact, if it did, it would be in violation of the LCP.

Please consider these comments and express our concern and strong objection when this issue is next considered. Thank you.

Sincerely,

Robert Henry

Robert Henry
Construction Manager

cc: Mayor Jerry Donovan
Vice Mayor Dennis Coleman
Councilmember Deborah Ruddock
Councilmember Naomi Patridge

Exhibit 12.14

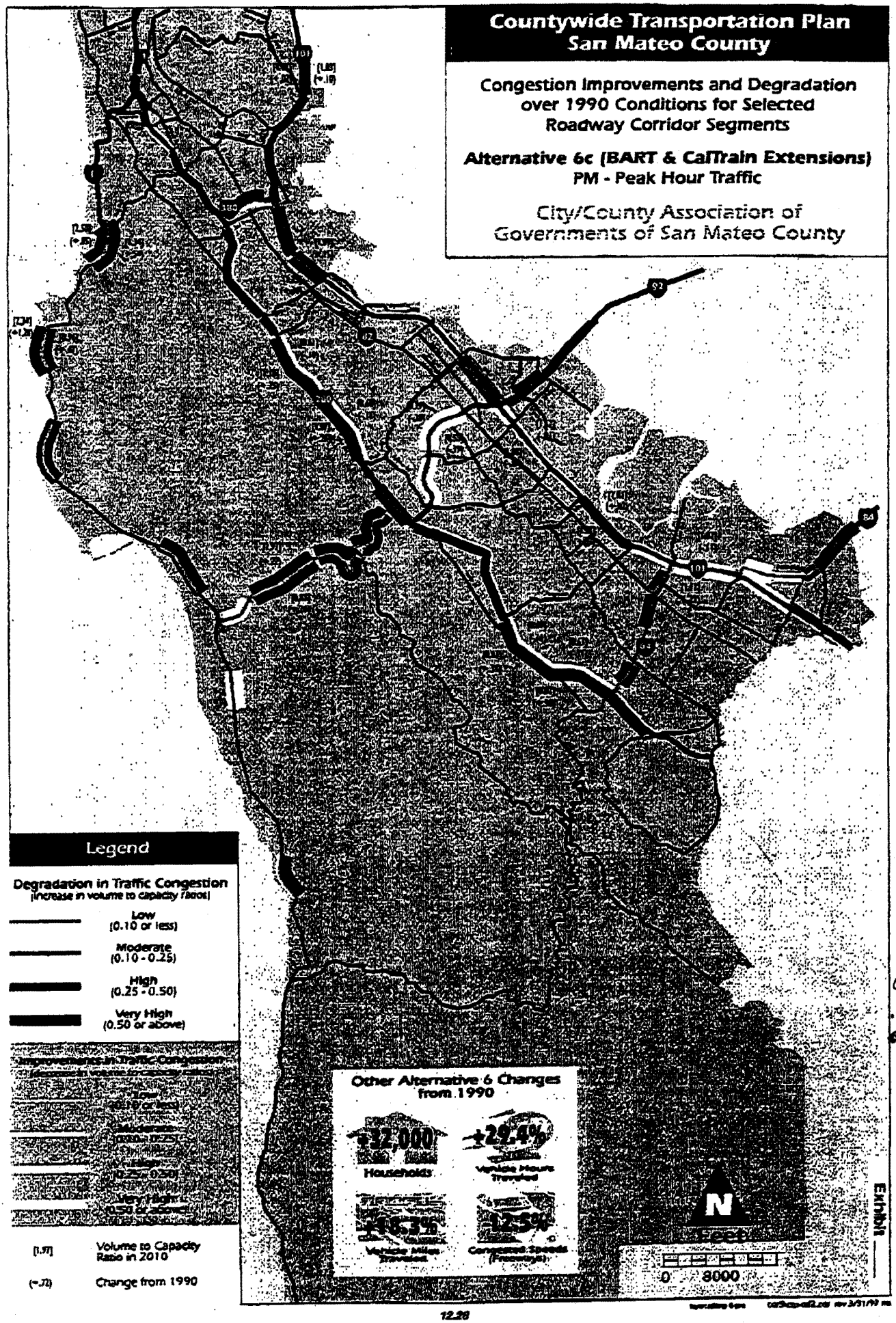

>1 = LOS F
0.91-1 = LOS
.751-0.9 = LOS
0-0.8 = LOS

to support the proposed project. This traffic study clearly shows that existing road infrastructure does not permit these projects to be built and comply with our Local Coastal Program. We therefore request that the Coastal Commission staff recommend denial of the project for this reason.

The long delay in the hearing of our appeal has created the opportunity for the applicant and the City to begin planning and creating the infrastructure which would permit the development to proceed. Allowing such a change in circumstances, from those which existed at the time of our appeal, to those assumed in the traffic study, unfairly subjects the public to a form of double jeopardy. With such a precedent, applicants would not be constrained by the current infrastructure, but would only need show that it was possible to create some of the necessary infrastructure at some time in the future.

In closing, we have learned that the City of Half Moon Bay will hold hearings on vehicular access to this project, and for the proposed expansion of Highway 1, on the evening of February 1. We wonder whether it is legal for the City to approve vehicular access for a project for which it has already granted a CDP, and which is now on appeal to the Coastal Commission. In the event that the City were to approve some vehicular access, and the widening of Highway 1 to support these developments, could such decisions be appealed to the Coastal Commission?

Thank you for your attention. If we can provide further information, please call during the days at 408-641-8945.

Sincerely,
George Carman

G. That the applicant, or Planning Commission and City Council, have incorporated all appropriate measures and conditions in the Planned Unit Development Plan necessary to mitigate any potential adverse impacts identified during the public review process.

18.15.045 Implementation of a Planned Unit Development Plan.

A. **Use Permit Required.** Approval of a Use Permit is required in conjunction with all Planned Unit Developments to ensure that development is in conformance with the provisions of the adopted Plan. For Planned Unit Developments that will be phased, the Planning Commission shall review the Use Permit and Planned Unit Development Plan for conformity prior to the issuance of any permits for subsequent phases. The Planning Department and Public Works Department shall ensure that all activities within a Planned Unit Development District are undertaken and completed in conformance with the provisions and conditions of the Planned Unit Development Plan and Use Permit.

B. **Effective Date.** A Planned Unit Development Plan shall be effective 30 days after final adoption by the City Council.

C. **Expiration of the Planned Unit Development Plan.** Unless otherwise approved by the City council, a Planned Unit Development Plan shall expire two years after its effective date unless a building permit has been issued, construction diligently pursued, and substantial funds invested.

D. **Renewal or Extension of a Planned Unit Development Plan.** The City Council may, upon the recommendation of the Planning Commission, extend the Planned Unit Development Plan a maximum of one year beyond the initial two year period if, at a duly noticed public hearing, it determines that the applicant has diligently pursued implementation of the Planned Unit Development Plan but was delayed as a result of factors and forces beyond the applicant's immediate control.

18.15.050 Amendment of a Planned Unit Development Plan. Amendments to an adopted Planned Unit Development Plan shall follow the procedures for application, review and adoption of a Planned Unit Development Plan established in this Chapter.

18.15.065 Status of a Previously Adopted PUD Plan. Amendments to a Planned Unit Development Plan adopted prior to the effective date of this Chapter shall follow the procedures specified in this Chapter.

Moon Bay, any public park and recreational facilities within the Dykstra Ranch Planned Unit Development required by the City of Half Moon Bay Park Dedication Ordinance shall be replaced outside the development at a location approved by the City Parks and Recreation Commission and City Council, unless access and public parking is available from a dedicated public street.

18.16.075 Water and Sewer Service. Inasmuch as there is limited sewer capacity available and that drought conditions exist in California:

A. That water saving devices such as low-flow shower heads and faucets and low-flush toilets shall be installed in all residences and common facilities such as the clubhouse.

18.16.080 Noise. In order to provide adequate protection from noise sources, the following standard shall be met for all residential structures:

A. That any residence constructed on the site shall be designed in such a manner that the ambient noise level within the structure shall meet a Sound Transmission Class (STC) of 50 (45 if field tested and verified by a registered Noise Engineer to the satisfaction of the City Engineer);

B. That in the event the studies undertaken by the City's Noise Consultant in preparing the Noise Element of the General Plan it is determined that additional sound attenuation is necessary, the developer shall comply with any appropriate recommendations set forth in the Draft Noise Element.

18-16 • JAN 4 1994

148 Kelly Avenue
Half Moon Bay, CA 94019

RECEIVED
NOV 22 1999
CALIFORNIA
COASTAL COMMISSION

November 20, 1999

California Coastal Commission
45 Fremont Street, Suite 2000
San Francisco, CA 94105

Dear California Coastal Commission,

We are writing you regarding the findings of the Biological Resources Report/ Pacific Ridge at Half Moon Bay prepared by LSA Associates for the developer, Ailanto Properties. We wish to bring to your attention that the LSA report is flawed in two ways, based on confusion about the definition of wetlands and the requirements for buffer Zones in Half Moon Bay.

We urge you to demand a true and accurate mapping of wetlands, riparian areas and environmentally sensitive habitats before you consider granting a Coastal Development Permit. This work should be performed by an unbiased and independent consultant committed to upholding the policies and definitions in the Half Moon Bay Local Coastal Program and the California Coastal Act.

We appreciate your attention to this important environmental issue.

Sincerely,

James B. Lane

James B. Lane/ Melissa S. Lane

Melissa S. Lane

CASSIDY
CHEATHAM
SHIMKO &
DAWSON
A Professional Corporation

December 23, 1999

RECEIVED
DEC 23 1999
CALIFORNIA
COASTAL COMMISSION

VIA HAND DELIVERY

Steve F. Scholl
Jack Liebster
California Coastal Commission
45 Fremont Street, Suite 2000
San Francisco, CA 94105

Re: Pacific Ridge; Responses To Issues Raised in Appeal No. A-1-HMB-99-022

Dear Messrs. Scholl and Liebster:

We are writing on behalf of Ailanto Properties, Inc., with respect to the above-referenced appeal by appellants Commissioner Sara Wan and Commissioner Mike Reilly and Eleanor Wittrup and George Carman (the "Appeal"). In the event that the Coastal Commission conducts a de novo hearing in connection with this Appeal, then many of the issues and purported deficiencies raised in the Appeal will become moot by virtue of the de novo hearing. Likewise, a considerable number of the points raised in the Appeal are no longer relevant in light of the proposed revisions to the Pacific Ridge project (the "Project") submitted to you on October 28, 1999. Nonetheless, for the record and in order to assist you in analyzing the Project, we submit with this letter a point-by-point response to each of the allegations raised in the Appeal.

If you have any questions regarding the attached, please do not hesitate to contact the undersigned, Steve Cassidy or Yuri Won of this firm.

Very truly yours,

CASSIDY, CHEATHAM, SHIMKO & DAWSON,
a Professional corporation

By: Anna C. Shimko
Anna C. Shimko
Attorneys for Ailanto Properties, Inc.

cc: Chris Kern
John Dixon
Ann Cheddar

RECEIVED
DEC 2 3 1999
CALIFORNIA
COASTAL COMMISSION

Pacific Ridge Project
Appeal No. A-1-HMB-99-022

Responses to Issues Raised by Appellants Sara Wan and Mike Reilly[1]

I. Deficiencies in Resource Mapping

A. Issue: An adequate biological report was not prepared, as required by LUP Policy 3-5 and Zoning Ordinance ("Z.O.") § 13.38.035(A) and (B)(1), because (1) the wetlands mapping in connection with the Wetland Mitigation and Monitoring Plan ("WMMP") did not map areas located on or within 200 feet of the project site (the "Property") and (2) the WMMP was not prepared using the LUP's definition of "wetlands."

Response: Numerous biological reports have been prepared for the Project. First, a biological report was prepared in connection with the environmental impact report for the Project, which was certified by the City of Half Moon Bay (the "City") in 1990 (the "EIR"). Second, a biological report in the form of a wetland delineation was completed in 1990 for the U.S. Army Corps of Engineers (the "Corps"). Another wetland delineation, which comprehensively dealt with biological issues on the Property, was undertaken in 1997, resulting in the WMMP. In connection with these reports, Ailanto identified and took into consideration off-site coastal resources within 200 feet of the Property in designing the Project (for instance, the Project's wildlife corridors are a result of taking off-site resources into consideration), although these reports did not specifically discuss off-site resources. In any event, Ailanto submitted to the Coastal Commission a Biological Report on June 24, 1999 (the "Biological Report"), augmenting the WMMP and specifically identifying all off-site coastal resources within 200 feet of the Property. See, Biological Report, pages 22 to 23 and Figure 2, for off-site resource within 200 feet of the Property.

Regarding the use of the LUP's definition of "wetlands" for the WMMP, as the Biological Report explains, use of the Corps definition of "wetlands" yields the same wetlands delineation as use of the LUP's definition. Thus, the differences in the definition of wetlands between the LUP and the Corps are irrelevant as they apply to the Project. Nevertheless, the updated wetlands delineation submitted with the Biological Report uses the LUP's definition of wetlands. We note that the only reason that the latest wetlands delineation shows more wetlands than previously is that new wetlands have formed as a result of actions by the tenant

[1] All of appellants' issues, as we have summarized them, are categorized under appellants' headings.

cc cont'd:

Robert Henry
Nancy Lucast
Steve Foreman
Stephen K. Cassidy
Yuri Won

rancher to divert water through a ditch he excavated from drainage 3 into the pond and the above normal rainfall associated with the El Niño conditions over the last couple of years.[2]

II. Inconsistencies with LCP Provisions Restricting Uses in Wetland and Riparian Areas.

A. Issue: There are no findings explaining how the installation of four culverts and a bridge in riparian corridors and the filling of wetlands for 8 lots and 2 portions of Silver Surf Road, a portion of Red Hawk Road and a portion of Lone Trail Way are consistent with LUP Policies 3-4 and 3-9. There are no findings that such uses are either resource-dependent or will not have a significant impact on sensitive habitats. LUP Policy 3-9 prohibits the construction of new roads within riparian corridors.

Response: On October 28, 1999, we submitted on behalf of Ailanto a proposed revised Project plan that addresses these issues. Under that revised plan, if it is approved by the Coastal Commission, there will be no filling of any wetlands on the Property and no lots or roads would be located within wetlands. Similarly, no lots would be within wetland buffer zones. Evidence to support the limited and vital elements of Project infrastructure proposed for riparian corridors and wetland and riparian buffer zones is set forth in our Primary Letter.

III. Inconsistencies with LCP Provisions Restricting Uses in Buffer Zones for Wetlands.

A. Issue: Portions of roads are within 100 feet of a mapped wetland, such as the marsh area near the intersection of Foothill Boulevard and Silver Surf and portions of Lone Trail Way, Silver Surf Road and Red Hawk Road.

Response: While we believe that the LCP requires a 100 foot buffer zone only around "lakes, ponds, and marshes" (see, letter to Steve Scholl, et al., from Stephen K. Cassidy, dated October 28, 1999, accompanying the Primary Letter [the "Companion Letter"]), the Project as proposed to be revised will avoid all development within wetland buffer zones, except for the emergency vehicle access road within the buffer zone for Wetland A, the road extending from Bayview Drive near Wetland F, and a bridge within the common buffer zone for Wetlands E and I. These uses are permitted in the buffer zones for wetlands, as explained in more detail in the Primary Letter.

B. Issue: There are lots within the 100 foot buffer zone for wetlands.

---

[2] See, Letter to Steve Scholl from Stephen K. Cassidy, dated October 28, 1999 (the "Primary Letter") and exhibits thereto for designation of drainages and wetlands on the Project site.

Response: See, Response III(A), above.

C. Issue: It is unclear from City's findings how a road and lot intrusion into wetland buffer zones are consistent with LUP Policy 3-12 and City's Conditions of Approval Nos. 7 and 20, which prohibit any portion of a residential lot to be within an established buffer zone.

Response: See, Response III(A), above.

IV. Inconsistency with LUP Policy 9.3.7.d Requirements to Provide Recreational Opportunities Along Drainage Courses.

A. Issue: City's approval does not contain findings relating to the dedication of site drainage courses for the provision of passive recreation, as required by LUP Policy 9.3.7.d. The fence required in Condition of Approval No. 5 would preclude passive recreation.

Response: The referenced LUP section 9.3.7.d is not a formal LUP policy; rather it is a *proposed* development condition for the Property. See, LUP p. 167. The purpose of this proposed condition will be well served by the Project. Ample passive recreation opportunities to the general public will be provided by a trail network throughout the Property, including the drainage courses. The drainage courses, along with other open space on the Property, will be dedicated to and managed by the homeowners association. This will assure maximum protection of the drainage courses by allowing them to be retained and managed in a comprehensive fashion via implementation of the Project's overall drainage plan, including the Stormwater Pollution Prevention Program.

The City imposed a condition when it approved the CDP for the Project requiring Ailanto to fence the outer edges of riparian buffer zones to protect riparian corridors. Ailanto objected to this requirement and now proposes to dispense with fencing of riparian buffer zones in connection with the proposed revised Project.

Responses to Issues Raised by Appellants Eleanor Wittrup and George Carman.

I. Wetlands, Streams and Riparian Corridors

A. Issue: The Project would fill 2.085 acres of wetlands and filling is prohibited by the LCP. LUP Policy 3-11 requires a 100 foot buffer zone around all ponds and "other wet areas" measured from the high water mark, and the Project does not propose this required buffer zone for the northwest wetland.

Response: Although in truth the LCP does not prohibit any filling of wetlands, the Project, as revised, does not involve the filling of any wetlands. For clarity,

however, we note that the Project, as approved by the City, involved the filling of less than one acre of wetlands, not 2.085 acres.

With respect to wetland buffer zones, please see Response III(A), above, to Issues Raised by Sara Wan and Mike Reilly. In some wetland areas, such as portions of the pond, the proposed buffer zones are significantly over 100 feet.

B. Issue: The Corps wetlands delineation is inadequate because it does not use the LCP's definition of wetlands.

Response: See, Response I(A), above, to Issues Raised by Sara Wan and Mike Reilly.

C. Issue: Wetlands to be created as part of the Project, as approved by the City, should be treated as existing wetlands subject to buffer zone requirements.

Responses: No wetlands would be created as part of the Project, as proposed to be revised. In any event, nowhere does the LCP require the treatment of future wetlands as existing wetlands. The purpose of LCP wetlands provisions is to safeguard existing wetlands.

D. Issue: The maps show that the Project, as approved by the City, has two road crossings through streams #1 and #3 and one road crossing through stream #2, even though the LCP prohibits alteration of streams for residential development. The buffer zone around stream #4 is ignored by siting a public park on it. Not all of the streams on the Property are indicated on any map, such as the stream from stream #3 to the pond and the stream from the pond to the northwest corner of the Property. The LCP requires span crossings of all streams.

Response: The Project, as proposed to be revised, does not include road crossings through streams, but proposes only bridges, including oversized arched culverts, that span the entire width of streams. The LCP permits bridges, including oversized arched culverts, through riparian corridors. See, Primary Letter. The Project never included a public park near stream #4 and, indeed, as proposed to be revised, includes a 30 foot buffer zone around stream #4. All drainages, or riparian corridors, on the Property are correctly reflected in the updated wetlands delineation maps submitted to the Coastal Commission. That delineation has been reviewed and approved as adequate by John Dixon, a Coastal Commission biologist. Contrary to the appellants' claim, there is no stream from stream #3 to the pond. Rather, this area between stream #3 and the pond is now a wetland and is being protected as such.

E. Issue: A letter from the U.S. Fish and Wildlife Service (the "USFWS") requires stream crossings to be altered, with some stream crossings altered to be large

enough for deer to pass through, and the Project does not incorporate such measures.

Response: The USFWS did not require in any letter that stream crossings be altered to be large enough for deer to pass through. In fact, the Project has always been specifically designed so that there would be no property line fences that would impede migration of large mammals and movement of numerous other species. The Project also includes wildlife corridors and rolled street curbs to allow movement of wildlife.

F. Issue: Bridges are allowed across riparian corridors only when there is no feasible alternative. The alternative of fewer homes is not discussed.

Response: Bridges are allowed across riparian corridors, and there is no requirement to demonstrate that there is no feasible or practical alternative to such bridges. See, Primary Letter, footnote 5. Nonetheless, there is no feasible or practical alternative other than to locate bridges across riparian corridors in order to develop the Property with residential homes, as specifically intended by the LCP adopted by the City and certified by the Coastal Commission. As reflected in the LCP, the policy makers have determined that homes should be built on the Property in order to meet local and regional housing needs, and that such placement of homes is a superior alternative to developing more rural lands and lands with significant coastal resources. See, Primary Letter; see, also, LUP, pp. 134, 166.

In terms of the alternative of fewer homes, Ailanto has gone further than merely discussing such option: it has actually proposed to revise the Project to include considerably fewer homes. The LCP allows 228 homes on the Property, yet Ailanto scaled back the Project to 216 homes in connection with the City Council's 1990 approval of the Vesting Tentative Map and the Dykstra Ranch Planned Unit Development Ordinance (the "PUD Ordinance"). Ailanto further reduced the number of homes to 197 in connection with the City Council's 1999 approval of the CDP for the Project. Now, in connection with the recent proposed revised plan for the Project, Ailanto has further reduced the number of homes to 150. The Project, as proposed to be revised, contains approximately 35% fewer homes than allowed in the LUP (i.e., 228), approximately 30% fewer homes than approved by the City in 1990 (i.e., 197), and approximately 25% fewer homes than approved by the City in connection with the CDP in 1999 (i.e., 197).

G. Issue: The maps do not show all of the streams on the Property. Seeps and wet areas may be wetlands.

Response: There has never been a question as to the number of streams on the Property, and all of the streams on the Property have been correctly indicated on

previous biological reports and maps. All streams on the Property are again reflected in the updated wetlands delineation submitted to the Coastal Commission.

H. Issue: Not all of the riparian corridors have proper buffer zones. Many of the streams on the Property have riparian growth, such as willows, that may classify them as wetlands, thus requiring a 100 foot buffer zone rather than a 30 or 50 foot buffer zone. No survey of the understory vegetation around the eucalyptus trees was done, so these areas might be wetlands as well.

Response: For the purpose of interpreting Coastal Act policies, the Coastal Commission makes a specific distinction between riparian and wetlands habitats. See, Appendix D, Technical Criteria for Identifying and Mapping Wetlands and Other Wet Environmentally Sensitive Habitat Areas in the Coastal Commission's Procedural Guidance for the Review of Wetland Projects in California's Coastal Zone. The Coastal Commission Procedural Guidance defines riparian vegetation as, "*that association of plant species which grows adjacent to freshwater courses, including perennial and intermittent streams, lakes, and other freshwater bodies.*" The LUP further defines riparian corridors and riparian vegetation for the purposes of defining buffer zones. Riparian vegetation is defined as requiring a 50 percent cover of some combination of the following listed species in Policy 3-7 of the LUP: red alder, jaumea, pickleweed, big leaf maple, narrowleaf cattail, arroyo willow, broadleaf cattail, horsetail, creek dogwood, black cottonwood, and box elder. In essence, the LUP distinguishes riparian vegetation composed of a predominance of native riparian species from stream side or water body vegetation dominated by introduced species such as eucalyptus, which is prevalent on sections of watercourses on the Property.

Ailanto, with the assistance of its biologist, has always correctly interpreted the Coastal Commission Procedural Guidance and LCP policies with respect to the distinction between wetlands and riparian habitats, and incorporated all of the appropriate buffer zones for riparian habitats.

I. Issue: The LCP requires a biological report in connection with the issuance of the CDP that identifies coastal resources off-site.

Response: See, Response I(A), above, to Issues Raised by Sara Wan and Mike Reilly.

II. Rare and Endangered Species Habitats

A. Issue: There are rare and endangered species within the Property for which no study was conducted since 1986. No provision for the protection of the habitats of these species is provided.

Response: Numerous surveys were conducted in the last ten years, and no red-legged frogs, garter snakes or other endangered species have ever been found on the Property. The first rare and endangered species survey was conducted in connection with the EIR prepared in 1988. A second rare and endangered species survey was prepared for the Corps in 1990. Last year, another rare and endangered species survey was conducted. In addition, a separate raptor survey (in which no nesting raptors were found on the Property) was prepared in connection with the Biological Report. Each of the surveys was conducted using established USFWS protocols, with the findings forwarded to that agency for review.

Appellants' allegation that no provision has been made for the protection of habitats of rare and endangered species is completely wrong. Ailanto formally consulted with the USFWS regarding measures to protect and enhance potential habitat for the red-legged frog and San Francisco garter snake, even though none of the surveys disclosed their presence on the Property. Ailanto incorporated into the Project design all of the USFWS's suggested conditions, such as the provision of wildlife corridors, conservation easements around environmentally sensitive areas, off-site habitat mitigation, and a bull frog eradication program to allow for the future viability of red-legged frogs on the Property. These conditions are currently being re-reviewed for necessity by the USFWS in connection with the proposed revised Project. So far, our client's communications with the USFWS have indicated that the USFWS is generally pleased with how the Project has been further revised. See, Response II(D), below.

With respect to the purported observations of an amateur biologist, Max Gunkel, please refer to the Biological Report, which explains why it is unlikely that Mr. Gunkel's observations would prove to be accurate. Biological Report, p.28-29.

B. Issue: The USFWS determined that there are red-legged frogs and San Francisco garter snakes within the Property and required mitigation for impacts to such species in its Biological Opinion. Mitigation of impacts is contrary to the LUP's policy of preservation of all sensitive habitat areas, including known riparian locations for the garter snake, under LUP Policies 3-24 and 3-25.

Response: The USFWS did not determine that there are rare and endangered species on the Property. Rather, it concluded that the pond and movement corridors nearby may be potential habitat for the California red-legged frog (despite the prevalence on the Property of bull-frogs and fish, which are predators of the red-legged frog) and the San Francisco garter snake. The USFWS nonetheless required certain measures to enhance these potential habitat areas (such as the bull-frog eradication program) to increase the viability of the red-legged frogs and garter snakes in these areas. See, Response II(A), above, to Issues Raised by Appellants Eleanor Wittrup and George Carman. The purpose

of these measures is not to mitigate for any harm created by the Project, but rather to try and create a future condition that will be more favorable for rare and endangered species. In any event, mitigation of impacts is not contrary to the LCP's policies of protection of sensitive habitat areas. For example, Policy 3-25 allows for mitigation measures in connection with construction activities to ensure protection of migration corridors of the San Francisco garter snake. Therefore, this prohibition is inapplicable.

C. Issue: The LUP prohibits development in riparian locations containing San Francisco garter snakes. This means the roads across riparian corridors are prohibited.

Response: The LUP Policy 3-25(a) precludes "development where there is known to be a riparian location for the San Francisco garter snake," subject to certain exceptions. None of the numerous surveys disclosed the presence of San Francisco garter snakes on the Property.

D. Issue: The Project does not comply with the USFWS's 300 foot buffer zone requirements or the corridor requirements between riparian areas and the pond.

Response: The USFWS never required 300 foot buffer zones. It did, however, erroneously require a 150 foot buffer zone around the pond after agreeing that a 100 foot buffer zone is sufficient and requiring off-site mitigation for the loss of potential habitat between 100 feet and 150 feet from the pond. This issue of buffer zones required by the USFWS is now moot in light of the manner in which the Project is proposed to be revised. The USFWS is currently revisiting its prior conditions in light of the proposed revised Project. Thus far, in the informal consultation with the USFWS representatives, the agency has expressed general satisfaction with the revised Project, although the consultation is not complete and there remain issues to be addressed (with the input of the Coastal Commission staff), such as the location of the loop road on top of the dam near the pond. With respect to the wildlife corridors, the USFWS staff has been pleased with the wildlife corridors shown in the revised Project, although the location of three homes needs to be resolved.

E. Issue: The permits granted by the Corps and USFWS allow "substantial disruption and destruction" of habitat areas, and is contrary to the LCP. The Corps and USFWS permits should be voided and the CDP revoked.

Response: Only the Corps granted a permit (and the Coastal Commission has no authority to void such a permit). The USFWS has no permitting authority over the Project; the agency was merely consulted in connection with the Corps permit. Obtaining a Corps permit was an express condition of the PUD Ordinance, which has been certified by the Coastal Commission as part of the LCP. While the

Corps permit allowed for the filling of wetlands (which is no longer part of the Project as proposed to be revised), it also required mitigation measures for any disruption and destruction of potential habitat areas. Thus, the LCP policies to protect sensitive habitat were achieved. With the Project as proposed to be revised, there will be further protection of these areas.

F. Issue: The presence of endangered species is a significant new circumstance, requiring a new EIR.

Response: None of the surveys for rare and endangered species revealed the presence of these species, and therefore no subsequent EIR is warranted. See, Response II(A), above, to Issues Raised by Eleanor Wittrup and George Carmen.

G. Issue: Ailanto has refused to comply with the USFWS conditions to scale back the project, as late as January 21, 1999. The July 27, 1998, Initial Study inaccurately represents that the mitigation plan is complete and unproblematic.

Response: The USFWS never required that the Project be scaled back. The USFWS, however, did erroneously impose a 150 foot buffer zone around the pond after agreeing to a 100 foot buffer zone and requiring off-site mitigation for the area between 100 feet and 150 feet from the pond. In any event, this issue is no longer relevant since the Project is proposed to be revised, and the USFWS is therefore re-evaluating its recommended conditions. See, Response II(D), above, to Issues Raised by Appellants Eleanor Wittrup and George Carman.

Contrary to the appellants' claim, the Initial Study accurately represents the mitigation measures ultimately adopted and required by the Corps after its consultation with the USFWS.

III. Coastal Access and Foothill Boulevard

A. Issue: Foothill Boulevard south of the Property to Highway 92 cannot be constructed because of wetlands and therefore the City denied a CDP for Foothill Boulevard on January 12, 1999. Foothill's connection to Highway 92 was an integral part of the original development plan for the Project. Because Foothill Boulevard will not be connected to Highway 92, the Project does not have adequate infrastructure to serve it.

Response: It is most reasonable to assume that Foothill Boulevard to the south of the Property will be constructed in the future since it is part of the LCP and the General Plan's Circulation Element. In fact, a substantial portion of Foothill Boulevard to the south of the Property is already used as a road. The fact that wetlands may be present somewhere along the Foothill Boulevard alignment, even if proven to be true, does not automatically preclude construction of the

road. Studies must be done to determine whether any such wetlands could be avoided in constructing the part of Foothill Boulevard that is south of the Property, and it appears likely that the road's alignment could be shifted to accommodate both the road and the wetlands resource. In fact, at its December 7, 1999 meeting, the City Council directed City staff to return to the City Council with data on the presence of wetlands affecting the construction and alignment of the portion of Foothill Boulevard to the south of the Property, and information on alternatives for routing Foothill Boulevard to sufficiently clear any such wetlands.

Contrary to appellants' assertion, no CDP was ever considered, much less denied, for the construction of Foothill Boulevard. The only action that the City Council took on January 19, 1999 (not January 12, 1999, as claimed by appellants), with respect to Foothill Boulevard was to opt not to fund the Foothill Boulevard/Highway 92 intersection as part of the Highway 92 widening project. Such action dealt with the mechanisms for financing various roadway improvements, but in no way affected the City's policies concerning future roads, including Foothill Boulevard.

The Project is not dependent on the construction of Foothill Boulevard to the south of the Property. Contrary to the appellants' assertion, the Project would be served by adequate infrastructure even without the construction of Foothill Boulevard south of the Property. Terrace Avenue abuts the Property and is adequate to serve the Project. In fact, since the Property is adjacent to Terrace Avenue, our client has a legal right to access the Property via Terrace Avenue. In addition, Bayview Drive, which is part of the General Plan's Circulation Element as a future road, is slated for construction in connection with the Beachwood subdivision (and indeed, could proceed in advance of the Beachwood subdivision if the City decided to pursue the road's immediate construction). Grandview Boulevard, which accesses the Property on its northern end, will serve as an emergency vehicle access road for the Project. Clearly, ample roads will serve the Project with or without the City's construction of Foothill Boulevard between the Property and Highway 92.

B. Issue: Foothill Boulevard is not going to be constructed to the south of the Project site because of wetlands. The Vesting Tentative Map shows Foothill Boulevard connecting to Highway 92 and connecting to Grandview Boulevard and Bayview Drive. The final map, however, does not show a connection to Grandview Boulevard, which connection would be difficult because of the wetlands on the northwest portion of the site. Nor does the final City resolution mandate the construction of Bayview Drive, as required by Z.O. § 18.16.070(E), leaving Terrace Avenue as a de facto permanent access road to the Project site. These changes are inconsistent with the Vesting Tentative Map and are grounds for denial of the final map.

Response: No "final map" has yet been approved. Even if it had been, that would not be germane to the consideration of a CDP application because consistency of a final subdivision map to the Vesting Tentative Map is not a criterion for issuance of a CDP. In any event, however, the Project is in substantial conformance to the Vesting Tentative Map. For example, the Vesting Tentative Map shows a connection of the on-site portion of Foothill Boulevard with Grandview Boulevard and the Project retains such a connection, with Grandview Boulevard extended onto the Property as an emergency vehicle access road. The Project also retains a Foothill Boulevard right of way on-site, as was required by the City in connection with the Vesting Tentative Map.

Contrary to appellants' assertion, the Vesting Tentative Map does not show Foothill Boulevard connecting to Highway 92 or to Bayview Drive as part of the Project. Rather, it shows Foothill Boulevard to the south of the Property as the "Proposed Foothill Boulevard per assessment district." Similarly, Bayview Drive is referenced as the "future Bayview Drive" in the Vesting Tentative Map. (We note that Bayview Drive is designated as a future road in the General Plan's Circulation Element.) Thus, the Vesting Tentative Map merely indicates that these roads are future roads to be constructed not as a part of the Project, but rather as separate projects to be undertaken either by a different property owner or by a funding mechanism such as an assessment district.

C. Issue: Use of Terrace Avenue was never shown on any previous map and the Vesting Tentative Map shows no Terrace Avenue connection to the Project, as required by Z.O. § 18.15.035 (F) and (G). Use of Terrace Avenue was not studied in a traffic study. Residents were not noticed regarding the use of Terrace Avenue.

Response: While the use of Terrace Avenue is not shown on the Vesting Tentative Map, Terrace Avenue abuts the Property and Ailanto has legal abutter's rights to use this street. The fact that the use of Terrace Avenue is not shown on the Vesting Tentative Map is of no import as this is but a minor change that is permitted under the Subdivision Map Act. Tentative maps are, as their name implies, tentative. Appellants' reference to Z.O. § 18.15.035(F) and (G) for the proposition that no changes to a tentative map can be made is misplaced; these sections merely refer to information that must be presented in a planned unit development application or amendment. Ailanto long ago submitted a planned unit development application, which resulted in the PUD Ordinance.

The EIR studied the use of local streets in evaluating potential connections of the on-site portion of Foothill Boulevard to Highway 1. See, EIR, p. 103 (the EIR states that Foothill Boulevard's connection to local streets other than Grandview Boulevard and Silver Avenue are possible, but the EIR's analysis of Grandview

Boulevard and Silver Avenue as the local connector streets provide sufficient analogous information of impacts).

With respect to notice issues, all of the residents were properly noticed of the Project. On this issue, we refer you to the letter to Mr. Bill Van Beckum, dated May 17, 1999, from Yuri Won of this firm, that sets forth in detail, with exhibits, how the notice requirements were followed. In fact, contained in Exhibit D of that submittal is a picture of the notice posted on street light poles on Terrace Avenue. Thus, any claim that the Terrace Avenue residents did not receive notice is wholly unsubstantiated.

D. Issue: LUP Policy 10-31 requires all development along Foothill Boulevard to minimize local street connections. The City Council decided to prohibit the use of Grandview Boulevard as primary access for the Project.

Response: LUP Policy 10-31 states that Foothill Boulevard "shall provide for through-traffic and local street connections shall be minimized *to the extent feasible* and on-street parking shall not be allowed." The purpose of this policy is to ensure that Foothill Boulevard serves the function for which it was intended: as a free-flowing coastal access and bypass route. This does not preclude any local street connections. In fact, the LUP's Access and Circulation Concept Map shows Foothill Boulevard connecting to Highway 1 via two local connector streets. See, LUP p. 226. Thus, allowing Foothill Boulevard on-site to connect to Terrace Avenue and/or Bayview Drive is not inconsistent with LUP Policy 10-31 or its intent.

During consideration of the CDP for the Project, the City Council never formally decided to prohibit the use of Grandview Boulevard as access for the Project.

E. Issue: Use of Terrace Avenue as access to the Project is prohibited because it would run through buffer zones around stream #3 and an off-site wetland on the proposed Beachwood subdivision. Thus, the Project is stranded.

Response: The information presented in the Biological Report was obtained by reviewing aerial photographs of the lands within 200 feet of the Property, by public records, and by direct observations from the Property. In November, 1999, Ailanto's biologist was able to review the preliminary wetland delineation for the Beachwood property prepared by Wetlands Research Associates and submitted to the City of Half Moon Bay. While this delineation shows a possible wetland which was not apparent on the aerial photographs reviewed for the Biological Report in the southeastern corner of the Beachwood property, this wetland is more than 100 feet from Terrace Avenue and its extension to the Property. The existing, undeveloped and padded/graded lots on the north side of Terrace Avenue are approximately 110 feet deep, putting any undeveloped land on Beachwood

more than 100 feet from Terrace Avenue. Finally, neither Terrace Avenue nor its extension onto the Property is within the required buffer zone for stream #3.

F. Issue: The circulation system within the Project must be altered to protect coastal resources.

Response: The Project's circulation has always been designed with the intent to protect coastal resources. Since the Appeal was filed, however, our client has proposed Project revisions, including changes to the circulation system, to further protect coastal resources.

G. Issue: The Project retains Foothill Boulevard on-site even though it encroaches on wetlands and their buffer zones and the City Council has decided not to go forward with Foothill Boulevard. The construction of Foothill Boulevard was an important aspect of the initial approval of the Project.

Response: Contrary to appellants' claims, the on-site portion of Foothill Boulevard will not encroach on wetlands or their buffer zones. In addition, as set forth in Response III(A), above, to Issues Raised by Eleanor Wittrup and George Carman, the City Council has made no decision not to go forward with Foothill Boulevard. In fact, as explained in Response III(A), above, the City Council recently directed City staff to investigate the wetlands along Foothill Boulevard to the south of the Property and to provide information on whether such wetlands could be avoided in constructing Foothill Boulevard.

The construction of Foothill Boulevard to the south of the Property was not part of the Project as approved in 1990. Rather, because Foothill Boulevard has been a longstanding LCP policy, the City took its first step to implement Foothill Boulevard by requiring Ailanto to construct those portions of Foothill Boulevard on the Property that are necessary for internal circulation and to reserve a right of way for this future road on the Property to be used if and when the City proceeds to undertake construction of Foothill Boulevard from Highway 92 through the Property. While the construction of Foothill Boulevard as a coastal access and bypass route was envisioned when the Project was approved in 1990, it was always understood that its construction would have to undergo its own separate approval process and that the City would have to secure the necessary financing for it. Thus, while the construction of Foothill Boulevard was envisioned, it was not assumed as part of the Project since Foothill Boulevard required its own environmental review and requisite approvals.

H. Issue: Z.O. § 18.16.070(E) requires that Foothill Boulevard be built and connect to Highways 92 and 1. A condition of approval in the LUP is for the participation in the building of Foothill Boulevard to mitigate local and coastal traffic problems.

Response: Z.O. § 18.16.070(E) does not require Foothill Boulevard to be built and connect to Highway 92 as any condition pertaining to the Project. Rather, it requires Foothill Boulevard to be constructed on-site with a connection to Highway 1, and that the intersection improvements at Foothill Boulevard/Highway 92 and Bayview Drive/Highway 1 be installed prior to the issuance of more than 100 building permits for the Project. If the City were not to proceed with the construction of Foothill Boulevard, then the requirement to improve the intersection of Highway 92 and Foothill Boulevard would cease to exist by operation of law. See, e.g., Gov. Code § 66462.5; see, also, Munns v. Stenman, 152 Cal.App.2d 543 (a local agency is without power to impose conditions that require actions by third parties over which the developer has no control).

Appellants' reference to a condition of approval in the LUP presumably refers to LUP Policy 10-31 (which technically is not a condition of approval). LUP Policy 10-31 requires that property owners near the Foothill Boulevard alignment participate in an assessment district for its construction. The Project is not inconsistent with this policy. If and when construction of Foothill Boulevard proceeds, the nearby property owners (including Ailanto Properties) will be required to participate in the assessment district.

I. Issue: The EIR shows that the traffic level of service ("LOS") from the Project exceeds the recommended LOS in LUP Policy 10-25. LUP Section 9.3.7 permits reduction in density if Highway 92 does not accommodate additional traffic from the development. The Project would substantially impair the public's access to the whole coast of San Mateo County by increasing congestion on Highways 1 and 92 to unacceptable levels, thereby violating the LCP coastal access policies.

Response: LUP Policy 10-25 states that the desired level of service on Highways 1 and 92 is LOS C, except during the peak commute hours where LOS E is acceptable. The EIR fully examined traffic impacts of the Project, concluding that the Project alone would not cause significant LOS deterioration. The EIR found that, with the Project, the level of service would be LOS E or better during the peak commute hours without any roadway improvements and with one local connection to Highway 1. The EIR concluded that with cumulative development, traffic levels of service may deteriorate to LOS F at peak commute hours; however, this cumulative condition is not inconsistent with LCP. LUP Policy 10-25 does not mandate levels of service, but rather suggests "desired" levels of service. In any event, the City found these impacts acceptable in approving the Vesting Tentative Map and the PUD Ordinance, which the Coastal Commission certified as part of the LCP.

With respect to reduction in density, LUP Section 9.3.7. states, as a proposed development condition, that at the time that a specific plan (i.e., the PUD

Ordinance) for the Project is considered and environmental review conducted for that plan, the Planning Commission may reduce the Project's density if Highway 92 is "inadequate to accommodate the amount of proposed residential development." The timing for such a density reduction decision was plainly in 1990, when the PUD Ordinance and the Vesting Tentative Map were approved, taking into consideration the Project EIR. No such density limitation was imposed on the Project at that time. Regardless, we note that the density of the Project, as proposed to be revised, will be reduced from the 228 units allowed in the LCP to 150 units, which would cut by almost one-third any of the Project's traffic impacts shown in any previous traffic study. Moreover, capacity on Highway 92 is not an issue of concern as the City is currently undertaking efforts to widen Highway 92.

Finally, the Project will not impact coastal access. The Coastal Act's coastal access protection provisions relate primarily to coastal access between the first road parallel to the sea (here, Highway 1) and the sea. See, Public Resources Code § 30210, 30211 and 30212. Accordingly, LUP policies pertain more to ensuring that there is adequate signage designating access routes on Highway 1; requiring lateral easements to the shore; and ensuring that structures that would preclude access are not built by the shoreline. See, LUP Policies 2-1 to 2-11. None of the LUP policies specifically relate to capacity on Highways 1 and 92. Nonetheless, even if capacity on Highways 1 and 92 were a coastal access issue, the City recently completed a Caltrans Project Study Report to widen Highway 1, held neighborhood workshops, and the City Council will make a final decision regarding the widening in the near future.[3] Similarly, the City is already in the midst of widening Highway 92 to ensure adequate capacity.

J. Issue: In 1997, the County of San Mateo analyzed the impact of development, and found that previous congestion impacts were underestimated. This is a substantial change in circumstance requiring a new EIR.

Response: Even if what appellants state is true, since an EIR has been prepared for the Project, the relevant issue is whether there exist circumstances requiring the City to prepare a subsequent EIR when it approved the CDP for the Project. The City did not prepare a subsequent EIR because it properly found in its Initial Study that the Project would not result in significant impacts beyond those identified in the EIR (such as cumulative traffic impacts). In terms of traffic impacts, it must be underscored that the Project, as proposed to be revised, contains significantly fewer homes (in fact, fewer by 30% than when approved by

[3] The City has long recognized the need to improve and widen Highway 1. See, EIR p. 95. The City, however, did not impose any such condition on the Project when it approved the Vesting Tentative Map because Project impacts did not warrant such measures.

the City in 1990) such that the traffic impact of the development will be less than previously studied.

In any event, the issue of the City's CEQA compliance will be moot if the Coastal Commission considers the Project de novo because the Coastal Commission's current review of the Project and its written documentation of the same will be the functional equivalent of a CEQA document.

K. Issue: Without Foothill Boulevard, all of the analyses show overall significant and unavoidable unmitigable adverse impacts on local traffic and coastal access.

Response: Overall traffic conditions within the City are outside the scope of this Appeal and the Coastal Commission's consideration of the CDP. Whether City can construct Foothill Boulevard to the south of the Property is currently being investigated, and the Project can proceed with or without Foothill Boulevard. See, Response III(A) and (G), above, to Issues Raised by Eleanor Wittrup and George Carmen.

IV. Visual Resources

A. Issue: Nearly all visible tree stands will be cut down to build Foothill Boulevard contrary to the LCP's policy to avoid or minimize cutting notable tree stands, such as Monterey pine. Tree stands may be endangered species habitat.

Response: Appellants are wrong. The Project proposes very little tree removal. Appellants fail to understand that the Property is grazing land (and at one point, farmed land) such that there are very few trees, notable or otherwise, on the Property. As set forth in the Biological Report, despite the appellants' allegations, the Property does not contain any Monterey pines. Finally, as disclosed by past surveys, the tree stands do not support any endangered species. As part of the Biological Report, a raptor survey was conducted and no raptor nests were observed on-site.

B. Issue: The houses are not clustered to allow view corridors, nor are they located where they are least visible from public view, as required by LUP Policy 9-9 and Section 9.3.7 of the LUP. Only people whose houses are directly adjacent to the hillside will have a view of the upland slopes, which is designated as scenic in the Visual Resources Overlay of the LUP. Story poles erected for the public site visit on February 9, 1999, were misleading.

Response: The PUD Ordinance, which flows from the approved Vesting Tentative Map, expresses an intent that the Project "be a detached single-family residential development clustered within dedicated open space areas." This is implemented through the specific design and development standards in the PUD Ordinance,

such as the prohibition of development above the 160 foot contour. Accordingly, the Project is clustered on the lower slopes of the Property at or below the 160 foot contour line, preserving the maximum amount of open space, such as the eastern foothills on and above the Property. Furthermore, there is no way physically to further cluster the homes without violating the setback requirements in the PUD Ordinance, which is part of the LCP. Thus, there can be no finding other than that the Project is clustered.

The Project will not impact views of the eastern hills on and above the Property. Since the eastern hills reach an elevation of 530 feet, it is absurd to allege that the Project, whose homes are limited to below the 160 foot elevation, will impact views of these eastern hills. Moreover, the EIR for the Project contained a comprehensive visual analysis, which concluded that the Project would not affect views of the eastern hills. Nothing has changed since certification of the EIR to alter this conclusion. In fact, the Project, as revised, will have even less visual effect because fewer homes will be built. Furthermore, Ailanto prepared visual simulations in connection with the City's 1999 consideration of the CDP for the Project. These simulations demonstrated that there will be no visual impacts from Highway 1. Thus, Appellant's allegation that only those people whose houses are adjacent to the hillside will be able to view the hillside is unsubstantiated and false.

Story poles erected for the public site visit on February 9, 1999, were not misleading, but were properly placed at the highest point of those structures nearest to the 160 foot contour in order to show the maximum potential visual effect.

C. Issue: LUP Policy 9-12 requires 20% of the gross area of the Property to be open space. There are no calculations of open spaces and this policy seems to be unmet.

Response: LUP Policy 9-12 requires that the amount of public, private and common open space in a planned development must be at least 20% of the gross area. Open space within the Project significantly exceeds this requirement. When Ailanto submitted its CDP application to the City, the Project contained 213 homes, with 31.1 acres (27% of the Property) designated as homeowners association ("HOA") open space, 5.6 acres (4.9% of the Property) designated as an HOA park, 1.8 acres (1.6% of the Property) dedicated to the City for a public park and 5.0 acres (4.3% of the Property) dedicated to the HOA to be preserved. In total, 37.8% of the Property was designated as open space. This is nearly double the LCP's requirement for open space. Since the Project as it is proposed to be revised contains merely 150 homes (an almost 25% reduction in homes than when the CDP was approved by the City), the amount of open space will be even further increased. Clearly, the LUP requirements are met and exceeded.

V. Public Notice and Process

A. Issue: Z.O. § 18.20.060 requires the City to publish notice of any review of a CDP application, mail notice to adjoining property owners and post notices on the site. The City held four hearings on the Project and notice of only one hearing was published in the newspaper and there was only one public notice posting, which did not contain the required information.

Response: Appellants misunderstand the notice requirements. Z.O. § 18.20.060 applies to notices of all applications for CDPs. When Ailanto first applied for a CDP application in the spring of 1998, the required postings of the notice of the application with all of the required information were made at the Project site, and notices to adjoining property owners were given by mail (and by neighborhood postings). Photographs of the posting of the required notices are set forth in Exhibit D to the letter to Mr. Bill Van Beckum from Yuri Won of this firm, dated May 17, 1999. In addition, publication of the Planning Commission hearing on the CDP application occurred 10 days before the first public hearing. When the Planning Commission's decision was appealed, notice of the public hearing for the appeal to be heard by the City Council was made through a newspaper publication. Each of the subsequent public hearings were continued hearings such that no notice was required. When a public hearing has been continued to a date certain, republication of notice of the public hearing is unnecessary. See, e.g., Z.O. § 18.20.060.B.1. The public hearing was closed after the site visit on February 9, 1999. The next meeting at which the City Council considered the appeal, on March 16, 1999, was not a public hearing, but a deliberation session for which no public hearing (and thus no notice) was required. See, e.g., Letter to Mr. Bill Van Beckum from Yuri Won, dated May 17, 1999.

The appellants' claim that there was no public input is, like all of their other claims, totally misinformed. Over the span of more than five months, the City held a total of eight hearings and one meeting on Ailanto's CDP application in which public testimony was permitted. Moreover, certain hearings for the Project made the front page headlines in the local newspaper, the Half Moon Bay Review. Thus, there was ample opportunity for public input on the Project.

VI. Environmental Review

A. Issue: The submittals for a planned unit development plan under Z.O. § 18.15.035 were not submitted.

Response: Z.O. § 18.15.035 does not apply to already approved planned unit developments such as the Project.

B. Issue: The finding that the Project conforms to applicable Z.O. provisions could not be made, as required under Z.O. § 18.15.40.A. No biological and geological reports were submitted, and the Final EIR is more than one year old such that it cannot act as a substitute.

Response: Z.O. § 18.15.40.A does not apply to already approved planned development projects such as the Project. The Project was previously found to be consistent with the applicable Z.O. provisions when the City approved the PUD Ordinance in 1990. The Coastal Commission thereafter reviewed the PUD Ordinance as part of the Implementation Plan and certified it as part of the LCP.

A new biological report was submitted to the Coastal Commission to augment the WMMP. Under Z.O. § 18.38.045.A., no geological report is required because the Project does not include any shoreline structures, any structure within 100 foot of a bluff edge, any wall or cliff-retaining structure, or any substantial alteration of waterways, nor is the Project being developed in areas of known geologic hazards. Despite this, in connection with the City's consideration of the CDP, a geotechnical report was prepared that concluded that there are no geologic hazards. That geotechnical report further supplemented the reconnaissance studies and the EIR that were prepared before the Vesting Tentative Map and the PUD Ordinance were approved in 1990.

C. Issue: The Initial Study is incomplete and its findings of no significant impact are erroneous, especially since the EIR concluded that there are significant and unavoidable impacts. A new EIR must have been prepared due to significant impacts. The City Council's adoption of the Negative Declaration was inappropriate and adopted without proper findings. There was no public review of the Negative Declaration.

Response: The City properly complied in all respects with CEQA. The Initial Study was prepared to determine if the analyses in the Final EIR for the Project remained valid. The Negative Declaration was adopted based on the finding that the Project would not generate any new significant impacts beyond those identified in the Final EIR. The City's adoption of the Negative Declaration and its findings in support thereof are proper and supported by substantial evidence in the record. The City also properly noticed the Negative Declaration for public review in accordance with CEQA, and numerous members of the public commented on the Negative Declaration as a result. Regardless, whether the City properly complied with CEQA (which it did) in terms of processing and adopting the Negative Declaration is irrelevant because the Coastal Commission is now acting on the CDP for the Project. The Coastal Commission has a certified regulatory program under Public Resources Code § 21080.5 and § 15251 of the CEQA Guidelines (at 14 California Code of Regulations § 15000 et seq.) so that

its consideration of a CDP under the Coastal Act will be the functional equivalent of CEQA review for the CDP.

VII. Resolution C-17-99

A. Issue: Resolution C-17-99 lacks findings that the project meets the standards set forth in the LUP. The final Resolution C-17-99 differs from the draft.

Response: If the Coastal Commission holds a de novo hearing on the Project, the sufficiency of the City's findings will be moot. We note, however, that the final Resolution C-17-99 differs from the draft merely because the City Council authorized staff to make minor revisions to the Resolution consistent with the City Council's determinations at the public hearing approving the CDP.

AILANTO PROPERTIES, INC.
ONE KAISER PLAZA / ORDWAY BUILDING / SUITE 1775
OAKLAND, CA 94612 • (510) 465-8888 • FAX (510) 465-5704

January 13, 2000

RECEIVED
JAN 14 2000
CALIFORNIA
COASTAL COMMISSION

Mr. Jack Liebster
California Coastal Commission
45 Fremont Street, Suite 2000
San Francisco, CA 94105-2219

Re: Pacific Ridge at Half Moon Bay
CDP Appeal Number A-1-HMB-99-022

Dear Jack:

This letter is a response to your list of questions set forth in an e-mail to Nancy Lucast on November 16, 1999, which was further supplemented by your letter to me, dated December 23, 1999, concerning the Pacific Ridge project (the "Project"). If there remain any unresolved questions after you have reviewed this letter, a meeting may be the most efficacious way to resolve any such issues.

Before answering the questions you have raised, I would like to stress that the proposed revised plan submitted to the Coastal Commission on October 29, 1999 (containing 150 units) conforms to the LCP and incorporates those features recommended by the Coastal Commission staff. Ailanto is, however, open to refining the proposed plan to meet the Commission's concerns and is committed to implementing those reasonable performance standards that the Commission may impose as conditions of approval.

A. Scope of City's CDP Approval.

In your e-mail correspondence to Nancy Lucast, you asked whether the CDP approval by the City of Half Moon Bay (the "City") was for a subdivision only, or whether it encompassed the homes as well. You also asked whether there have been any changes, or added detail, to the phasing plan included in the early Project documents.

The City's CDP approval encompassed both the subdivision and the construction of the homes. City Council Resolution C-17-99 approving the CDP for Pacific Ridge specifically states that a CDP application "for a previously approved Vesting Tentative Subdivision Map and for 216 individual houses" was submitted for approval. It was established at the outset when Ailanto submitted its CDP application to the City in February 1998 that the City would process a CDP covering both the subdivision and the individual homes. Accordingly, Ailanto submitted architectural plans, grading plans, improvement plans, and landscaping plans, and included therein, detailed information (such as the placement of the homes, setback information, driveway locations, exterior colors and other relevant information) necessary for CDP issuance.

In terms of Project phasing, the Project will most likely be constructed in three continuous phases, as opposed to four phases as indicated in early Project documents. While the work was always anticipated to be continuous from the south, in a normal construction fashion, the phases referred to the number of final maps the project would be broken down into.

B. Adequate Infrastructure: Traffic Access and Cumulative Impacts.

As you know, this Project is adjacent to existing development and currently has rights to water, sewer, schools and has adequate existing road facilities to serve the Project. As set forth in the letter to you and Steve Scholl from Anna Shimko, dated December 23, 1999, Terrace Avenue abuts the Project site (the "Property"), so that Ailanto has a legal right to use this road for access. In addition, Bayview Drive, which is part of the General Plan's Circulation Element as a future road, is slated for construction in connection with the Beachwood subdivision.[1] Grandview Boulevard, which accesses the Property on its northern end, is being proposed to be used as an emergency vehicle access way ("EVA"). In addition, in cooperation with the City, Ailanto Properties is performing design studies on the off-site portion of Foothill Boulevard to the south of the Property (which currently exists as a dirt road pursuant to an access easement and is used everyday by homeowners adjacent to the southern portion of the Property to travel to and from Highway 92). This information is described in more detail below. Foothill Boulevard is also in the General Plan's Circulation Element as a future road.

You are correct that the City considered the information contained in the December 1998 "Supplemental Traffic Study, Foothill Boulevard Access Alternatives," prepared by CCS Planning and Engineering (the "CCS Report"), in approving the CDP for the Project. You are also correct that this study did not include the infill development projected in the LCP. It is important to understand, however, that previous traffic studies have assumed cumulative growth to be greater than is now permitted. For example, the traffic study in the environmental impact report ("EIR") for the Project did not assume the growth limitations of either Measures A or D. Measure A limits population growth to 3% per year; Measure D (which the City is currently incorporating into its LCP for Coastal Commission certification) amends Measure A by further limiting growth to 1% per year. Similarly, the CCS Report and the Highway 92 Traffic Assessment prepared by Dowling and Associates in June, 1998 (the "Dowling Report"), which was also considered by the City in its approval of the CDP for the Project, did not consider the growth limiting effect of Measure D. In addition, all of the previous traffic studies assumed Project density to be greater than the 150-units shown on the proposed revised plan submitted to the Coastal Commission on October 29, 1999, and even greater than the 197-units approved by

[1] According to a biological report prepared by the Beachwood developer, no wetlands exist on the Bayview Drive alignment. This report has been submitted to the City in connection with the Beachwood application for a coastal development permit. We note that the Bayview Drive alignment has utilities already installed under it, as well as a constructed approach at Highway 1.

the City through the CDP. For example, the EIR for the Project assumed 228-units based on the LCP; the Dowling Report assumed 216-units based on the Project's Vesting Tentative Map (the "VTM"); and the CCS Report assumed 213-units based on Ailanto's CDP application. Because the Project has been continually reduced in density, all of the conclusions in these past traffic studies with respect to the Project's traffic impacts are overstated.

You raised a concern that the CCS Report does not provide levels of service for Terrace Avenue as the primary point of access to the Project. In reality, Terrace Avenue, Grandview Boulevard and Bayview Drive each serve the same function, as local connector streets between the Project and Highway 1and are thus interchangeable. Also, the level of service analysis for either Bayview or Grandview provides the necessary level of service information on the use of Terrace Avenue. The CCS Report analyzed levels of service for the use of Bayview Drive, as well as Grandview Boulevard, as primary access points to the Project.

You also raised a concern that the CCS Report does not evaluate the specific "performance" standard of Policy 10-25 of the LCP, which provides, "[t]he City will support the use of Level of Service C as the desired level of service on Highways 1 and 92, except during the peak two hour commuting period and the ten-day average peak recreational hour when Level of Service E will be acceptable." We note that this policy does not mandate specific performance standards, but rather states the desired levels of service on Highways 1 and 92 that the City should support. In any event, the CCS Report does analyze AM, PM and weekend noon peak periods.

To comprehensively address your concerns with respect to traffic, we have commissioned Fehr & Peers Associates, Inc., to complete an updated traffic report dated January 12, 2000 (the "Traffic Report"), attached hereto as **Attachment A**. This report provides all of the information you have requested with respect to current capacity, conditions and levels of service on Highway 1, Highway 92 and the potential access to the Project. The Traffic Report analyzes a range of potential Project traffic impacts and cumulative traffic impacts based on different access alternatives for the Project. It also analyzes the impacts from the Project both at the proposed 150-unit density and the 197-unit density approved by the City. It also assumes in its analysis the buildout projections of the LCP, as limited by the growth limitations of Measure A and Measure D. This report does not, however, use the San Mateo County Travel Demand Forecasting Model developed for the Congestion Management Plan as you suggested in your letter because this model is inappropriate to measure traffic impacts of the Project, as explained in greater detail in the Traffic Report.

According to the Traffic Report, with any one of the following alternatives for access to the Project, the Project would have no significant impacts in the cummulative development

scenario (which would occur in 2018 or, if one considers the growth limiting effects of Measure D, 2030 and beyond), provided that Highway 1 is widened as contemplated:

- Terrace Avenue with a signalized intersection at Highway 1;
- Bayview Drive with a signalized intersection at Highway 1;
- Foothill Boulevard, or;
- Bayview Drive and Foothill Boulevard.

If Highway 1 is not widened, the revised proposed plan would result in acceptable cumulative levels of service only if Foothill Boulevard is installed.

With respect to planned access and roadway infrastructure improvements, we must stress that Terrace Avenue abuts the Property and may be used for access to the Property. Use of this road may be the environmentally sound alternative since it is an existing road and neither the road nor its proposed extension onto the Property will encroach on any wetlands or their buffer zones.

The Appellants have argued that Ailanto Properties has changed the status of Terrace from a temporary connection to a permanent connection by deleting a lot at the head of Terrace and showing a permanent road connection there. This is not true. You will notice that the revised 150-unit plan submitted October 26, 1999 has lot #31 over which the temporary connection lies. (This is why the lot appears to be substandard in size.) This is commonly accomplished by recording a temporary access easement over the lot when the final map is recorded. When, and if, another permanent access becomes available, the easement can be extinguished, the road connection closed and the home built.

The following actions have recently been completed. First, on December 7, 1999, the City Council adopted a resolution directing the City Manager to provide the Council with information on realigning the off-site portion of Foothill Boulevard to the south of the Property to clear any existing wetlands and their buffer zones. Since then, a biological investigation has been done and a preliminary road design implementing the off-site Foothill Boulevard to clear wetland buffer zones has been forwarded to the City. See Ailanto Properties' letter to Blair King, City Manager dated December 28, 1999 and January 6, 2000, **Attachments B & C**. This information is expected to be reviewed by the City Council as early as February 1, 2000.

Second, Bayview Drive is slated for construction in conformance with the General Plan's Circulation Element in connection with the Beachwood subdivision project, for which a CDP appeal will soon be heard by the City Council. The developer of the Beachwood project has recently submitted its biological study to the City, which shows no wetlands along the Bayview Drive alignment. Moreover, the developer for the Beachwood project has already constructed

the approach/turning lane for Bayview Drive on Highway 1. In addition, Bayview Drive could be constructed sooner than the Beachwood subdivision if the City were to choose to exercise its eminent domain powers and construct this road.

Third, a Caltrans Project Studies Report ("PSR") for the widening of Highway 1 has been completed, community workshop meetings have been held on this potential project and the City Council should make its final decision in the near future. Funding obtained from the County Transportation Sales Tax for this Project is shown on the State Transportation Improvement Plan ("STIP").

In addition, the widening of Highway 92 within the City limits has already been authorized, designed and funded. A construction contract is scheduled to be awarded this summer.

In addition to these regional improvements, Grandview Boulevard is proposed to be used as an Emergency Vehicle Access route.

As set forth in the letter to you and Steve Scholl from Anna Shimko, dated October 29, 1999, the Project was not approved by the City to be contingent on the construction of Foothill Boulevard to the south of the Property, the construction of Bayview Drive, or the widening of Highway 1. Accordingly, it is unnecessary to phase the Project in accordance with these off-site improvements, which are not within Ailanto's control in any event.

You have asked for a description of improvements and other means to mitigate traffic, increase transit and other alternatives to automobile use pursuant to Coastal Act § 30252.[2] Assuming that Coastal Act § 30252 applies, the Project has several features that maintain and enhance public access, as required. For instance, as required by Coastal Act § 30252, the Project is a non-gated community open to the public and provides for non-automobile circulation within the Property through a system of trails, adequate parking, and recreational features such as a park, trails and a community garden on the Property so that new residents will not overload nearby coastal recreation areas.

---

[2] We note that the standard for CDP issuance for the Project is not the Coastal Act, but rather the City's certified LCP. See, e.g., Pub. Res. Code § 30604(b). As our attorneys have made clear before, the City's certified LCP does not incorporate the Coastal Act, but merely states that the City should adopt the policies of Coastal Act §§ 30210 to 30264 as the "guiding" policies of the Land Use Plan. See, e.g., Letter to Steve Scholl, et al., from Stephen Cassidy, dated June 24, 1999. Accordingly, Coastal Act § 30252 is not an LCP policy per se, but a provision that guides the LUP policies.

C. Wetlands, Drainage and Grading.

Set forth below are responses to your questions concerning wetlands, drainage and grading in the order that you have presented them in your letter dated December 23, 1999. Most of your questions are answered by Steve Foreman in his letter to me dated December 21, 1999, attached hereto as **Attachment D**; however, I have supplemented his answers with the following information.

1. Interpretation of Wetland Buffers vs. Riparian Buffers.

You question whether a 100-foot buffer zone (instead of a typical 30-foot buffer zone) should apply where wetlands may exist at the margin of a riparian corridor. The Biological Resource Maps show all the wetlands, riparian habitats and required buffers and have been reviewed in the field with John Dixon of Coastal Commission. Where wetlands are present, the required 100-foot buffers are identified and no residential lots are located within 100-feet of any wetland. Your question seems to reflect the appellant's comments that riparian vegetation should be classified as wetland habitat and that 100-foot wide buffers should be required.

The Coastal Commission and Half Moon Bay LCP make specific distinctions between riparian and wetland habitats. Appendix D, the Technical Criteria for Identifying and Mapping Wetlands and Other Environmentally Sensitive Habitat Areas in the Procedural Guidance for the Review of Wetland Projects in California's Coastal Zone (CCC 1994), provides a specific discussion of this issue. That Appendix D notes that the FWS Classification System includes riparian areas as a kind of wetland. It also notes that riparian vegetation can be classified as hydrophytic. However, the guidance also describes, that for the purposes of interpreting Coastal Act policies, wetlands and riparian habitats are very different communities.

The Coastal Commission guidance defines riparian vegetation as:

"that association of plant species which grows adjacent to freshwater courses, including perennial and intermittent streams, lakes and other freshwater bodies."

The Half Moon Bay LCP's Land Use Plan (LUP) further defines riparian corridors and riparian vegetation for the purposes of defining buffer zones. Riparian vegetation is defined as requiring a 50 percent cover of some combination of the following listed species in Section 3-7 of the LUP: red alder, jaumea, pickleweed, big leaf maple, narrowleaf cattail, arroyo willow, broadleaf cattail, horsetail, creek dogwood, black cottonwood, and box elder. Basically, the LUP distinguishes riparian vegetation composed of a predominance of native riparian species from stream side or water body vegetation dominated by introduced species such as eucalyptus, which is prevalent on sections of the watercourses on the Property.

The Project has always correctly interpreted Coastal Commission and LCP policies with respect to the distinction between wetlands and riparian habitats and incorporates all of the appropriate buffer zones for riparian habitats.

2. Grandview Boulevard.

The use of Grandview for an EVA as it relates to the LCP's buffer zone requirements has been addressed in a letter to Chris Kern from Steve Foreman, dated November 2, 1999, as well as in the letter to Steve Scholl from Stephen Cassidy, dated October 29, 1999. These letters also addressed the lack of alternatives to using Grandview Boulevard as an EVA, as well as options for installing an environmentally friendly porous pavement system to improve this road, such as a "Grasscrete" surface. The City's Fire Department has preliminarily indicated that the use of Grasscrete or equivalent, if properly done, is acceptable for EVAs. Please refer to the letter from Half Moon Bay Fire Protection District to Robert Henry dated November 17, 1999 **Attachment E,** with typical product descriptions attached.

To reiterate, Zoning Ordinance ("Z.O.") § 18.38.080.E allows improvement of existing roadways in wetland buffer zones. Grandview Boulevard near the Property is an existing dirt road, plainly visible on aerial photographs. An access easement exists over the unpaved, improved portion of Grandview Boulevard to the Property, as do power poles. Grandview Boulevard has long been used to access the Property, including the ranch house that previously existed in the area that is now Wetland A. Ailanto and our rancher tenant still use Grandview Boulevard to access the Property. Moreover, we are requesting that Grandview Boulevard (most of which already exists as an improved road) be used for an EVA, merely to comply with the City's safety requirements. No traffic studies are required for this restricted use.

3. Lots 119 to 125.

Steve Foreman has addressed the issue of whether developing Lots 119 to 125 will impact nearby wetlands in his letter (**Attachment D**).

4. Storm Water Runoff and Sedimentation.

Steve Foreman has also addressed the issue of storm water runoff and sedimentation in his December 21, 1999 letter (**Attachment D**). A few points deserve mention here, however.

With respect to drainage onto off-site areas, the portion of the Property from the pond to the north (approximately 17 acres on-site) will continue to drain into the Kehoe Watershed, which finds it's way to the Kehoe Ditch west of Route 1. The majority of the Property from the

pond to the south will continue to drain into the Chesterfield Watershed. Runoff in the Chesterfield Watershed drains into City storm drains at, or close to, the western Property line. This system was improved in the early 1980s through the Terrace Avenue Assessment District. The improvements included the installation of storm drainage lines under the planned Bayview Drive, and increasing the size of the storm drain lines under Terrace Avenue and Highway 1 to compensate for future flows from the Project (as well as two other proposed projects nearby, the Beachwood and Glencree subdivisions) into the Chesterfield Ditch, west of Route 1. **Attachment F**, is a diagram, which shows these watersheds. Also, the EIR for the Project has further information about this. It is unknown whether a CDP was issued for these improvements or whether environmental conditions were imposed.

In terms of on-site drainage flows, long before Ailanto purchased the Property in 1985, the embankment on the north side of the pond was breached, causing the creation of a man-made stream, which artificially changed flows at the pond from the Chesterfield Watershed to the Kehoe Watershed. The improvement drawings submitted with the CDP application to the City propose to fix this problem by installing a drain in the pond, which would bring flows back into the Chesterfield Watershed. However, by using a slotted weir at the head of the man-made stream flowing to the Kehoe Watershed, Drainage 5 will adequately remain a wet area with riparian flows, the riparian vegetation will continue to thrive and only limited flows will continue to the Kehoe Watershed. Please refer to MacKay & Somps drawings 7, 8 and 14 submitted with the CDP application to the City. The drain in the pond will also serve to drain the water out for future bullfrog eradication requirements.

The only increase of storm water flows from the Project will be due to the impervious surface areas that would result from the Project. The amount of such impervious surface was calculated to be 27% when our CDP application was made to the City, which encompassed 213 homes. This figure is below thresholds established by the California Regional Water Quality Control Board (the "Water Board"), and, therefore, the Water Board issued a Waiver of Waste Discharge Requirements and a Water Quality Certification for the Project on January 11, 1999. With the proposed density reduction to 150 homes, this impervious surface area will be dramatically decreased, and thus water flows will also decrease.

5. Grading Estimates.

Concerning grading estimates, locations and profiles, please refer to the MacKay & Somps rough grading plans submitted with the CDP application, which is part of the record forwarded to the Coastal Commission by the City. The original approved site plan for the Project, as shown on the VTM, proposed to construct roadways and homesites around the topography of the natural features. For example, cul-de sacs were located on knolls to limit the amount of cuts required. The priority with respect to the current proposed revised site plan

before the Commission has been to design around the location of the current wetland buffer zones, with less emphasis on the natural topography. The perimeter of these wetland buffer zones restricts grading alternatives. The area of greatest grading differences from our original grading plan is in the vicinity of the pond, where streets and a number of the homesites are proposed to be deleted. The roadways east of the pond have been moved further toward the foothills to obtain the needed wetland buffer zone clearances.

The original total of all cuts and fills was estimated to be 190,000 cubic yards to be balanced on the site. As you and I have discussed, to do a revised comprehensive grading plan for an unapproved interim work plan is not feasible; however, we have done a very preliminary rough grading study for the proposed 150-unit plan submitted to you. In comparing the original rough-grading plan to this proposed revised site layout, the grades in the southerly half of the site are almost unchanged. The decreased grading resulting from deletion of 47 lots and a substantial amount of roadway largely offsets the additional grading in the northern half of the Property. Thus, the total amount of cuts and fills in the proposed revised plan are approximately the same as the original plan.

6. Grading Impacts to Hydrology and Wetlands.

Steve Foreman addresses grading impacts to hydrology and wetlands in his December 21, 1999 letter (**Attachment D**).

7. Less Grading Due to Placement of the Loop Road on the Pond Dam.

You asked for a quantification of the grading avoided by placing the loop road on top of the dam, as shown on the proposed revised plan. Placing the road below the dam would require 30,000 cubic yards of cut and 1,200 cubic yards of fill, with the fill encroaching into the adjacent wetland buffer zone. This alternative would also require removal of a large cypress tree. We believe that placement of the loop road on top of the dam, which is a man-made feature, is environmentally superior because its construction would require fewer cuts and fills, and the loop road would be outside of the wetland buffer zone to the west. Specifically, this alternative would require 10,600 cubic yards of cut and 2,800 cubic yards of fill. I note, however, that during informal consultations with Curt McCasland of the U.S. Fish and Wildlife Service ("USFWS"), he indicated that he prefers the placement of the loop road below the dam. I am sure we can resolve this issue when we meet with USFWS on January 19, 2000.

In terms of geological or engineering reports regarding the safety and effect of placing the road on the earthen dam, a soils report was performed by Earth Systems Consultants in connection with previous plans to lower the dam for aesthetic reasons from approximately 106-

109 feet to 103 feet. This report concluded that the dam area is stable and our civil engineer has since concluded that it is feasible to place a road on top of this earthen dam.

Although 42 feet is available for the proposed road and the trail/sidewalk on top of the dam, the road plus trail/sidewalk can be constructed with approximately 36 feet in width.

8. Cut and Fill in Buffer Zones.

Exhibit E to the October 28, 1999, letter to Steve Scholl, et al. from Stephen Cassidy, is a very rough sketch and was not intended to be used as a detailed study. No cut or fill is proposed in wetland buffer zones, except in connection with the loop road around the pond. This is why lot 114 on the proposed revised plan submitted to you on October 29, 1999 was deleted. For your information, I have attached a grading study sketch, which is attached to MacKay & Somps letter to me dated December, 20, 1999, **(Attachment G)** which demonstrates how lots 106 through 115 can be installed without cut or fill encroaching onto the required buffer zones.

9. Arched Culverts.

Arched culverts leave the riparian bed undisturbed and span the entire stream channel. Such arched culverts are commonly regarded as bridges, according to our civil engineers. The dictionary defines a bridge as "a structure carrying a pathway or roadway over a depression." (Webster's Ninth New Collegiate Dictionary) The proposed arched culverts do exactly that. The proposed arched culverts also qualify as bridges under the LCP in that they serve the same exact goal, purpose and function as bridges: to span a riparian corridor and leave the riparian bed undisturbed. A design showing actual clearances above the streambed cannot be finally calculated until the project plan is finalized; however, we note that the arched culverts would be designed to allow the free-flow of riparian wildlife.

10. Site Plan, Dated October 26, 1999, and Lots 4 to 7.

The proposed revised 150-unit site plan, dated October 26, 1999 (and submitted to the Coastal Commission on October 29, 1999), incorporates all required buffer zones set forth in the updated "Map 2" that Anna Shimko provided to the Coastal Commission on November 4, 1999. As described before, Lot 114 will not be built to avoid encroachment onto a wetland buffer zone, despite the fact the site plan shows this lot.

Please refer to Steve Foreman's letter of December 21, 1999 **(Attachment D),** which addresses whether there is any wetland buffer zones that encroach onto lots 4-7.

11. Timing of Wetlands Surveys.

Steve Foreman addresses issues relating to timing of wetland surveys in his December 21, 1999 letter (**Attachment D**).

12. Wetland B and Topographical Information.

Steve Foreman addresses the differences between the U.S. Army Corps of Engineers' ("Corps") jurisdictional maps and the current information provided to the Commission with respect to the size of Wetland B. I note that the complete topographical information for the northeastern portion of the Property is included in the grading drawing set (see, e.g, Grading Plans, sheet 2 of 15, by MacKay & Somps). To clarify this, I have included for your use a clean topographic sheet for the entire project at 1"=100' scale, see **Attachment H**.

13. USFWS Conditions.

In light of the revised plan, some of the USFWS conditions previously imposed by the Corps are now unnecessary, as explained in a letter to Curt McCasland of USFWS from Steve Foreman of LSA, dated November 11, 1999. In terms of these conditions as they relate to the CDP issued by the City, City copied these conditions verbatim as Conditions of Approval for the CDP.

14. Corps Conditions.

You have expressed confusion as to which conditions the Corps actually imposed on the Project due to the fact that there are several versions of the Corps' conditions in the record forwarded to you. The Corps' authorization for a nationwide permit dated December 15, 1998, contains the correct conditions. The City Council's CDP Condition 19 does not refer to a November, 1998 Corps letter. It merely states, "The December, 1997 Wetland Mitigation and Monitoring Plan shall be revised to incorporate conditions set forth in the Nationwide Permit 26 issued by [the Corps] on December 15, 1998." There exists no January 26, 1999 Corps letter, either. There is, however, a USFWS letter dated January 26, 1999 in which USFWS objects to the fact the Corps chose not to adopt all of the USFWS' recommendations with respect to the Project. This letter does not (and legally cannot) "amend" the Corps conditions since it is the Corps that has the authority to impose conditions in connection with its issuance of a nationwide permit. Moreover, it is important to keep in mind that whatever objections USFWS may have had are now moot since the agency is re-evaluating its recommended conditions in light of the proposed revised plan. As explained in Anna Shimko's letter to you and Steve Scholl, dated December 23, 1999, many of the conditions originally recommended by USFWS and ultimately adopted by the Corps are no longer valid in light of the proposed revised plan. These conditions

were imposed in connection with the Project's previous proposal to fill approximately one acre of wetlands, which required the implementation of certain mitigation measures, such as the creation of over two acres of new wetlands on the Property. These requirements are now unnecessary since no wetlands are proposed to be filled. The upcoming meeting with you and USFWS should clear up any further questions you may have.

15. Off-site Mitigation.

The requirement to pay $100,000.00 for off-site mitigation is no longer required. This condition was imposed in connection with the Project' s development of the *potential* endangered species habitat area between 100 feet to 150 feet around the pond. The proposed revised plan significantly reduces development in this area. Again, the upcoming meeting with USFWS should resolve these issues.

16. Off-site Resources.

Steve Foreman addresses whether all off-site resources have been properly delineated in his December 21, 1999 letter, **Attachment D**.

17. Wetlands Delineation.

Steve Foreman addresses whether the wetland delineation submitted to the Coastal Commission is complete in his December 21, 1999 letter, **Attachment D**.

18. Protection of Wetlands in Perpetuity.

Steve Foreman explains in his December 21, 1999 letter **(Attachment D),** the mechanism to protect wetlands on the Property; however, some further clarification is provided here. It should be noted that the proposed Project Home Owners Association is the entity that we propose to own, manage, maintain and fund all open space on the site, which would include all common areas, regardless of whether it is a pond, an upland slope, a riparian corridor, a wetland, a buffer, an interior street, etc. The only area outside the proposed H.O.A.'s control would be the park near the high school's ball field, which would be dedicated to the City (and Foothill Boulevard on-site, if they do not formally accept the dedication).

With respect to Foothill Boulevard, you suggest that since Foothill Boulevard has been "deleted" due to the presence of wetlands, perhaps this right of way should now be an easement/dedication to wildlife. Foothill Boulevard to the south of the Property has not been "deleted." The City is currently investigating whether this road can be improved without encroaching on wetlands. Foothill Boulevard is still a part of the LCP and the General Plan's

Circulation Element. Accordingly, the Project retains Foothill Boulevard on-site in accordance with these plans and as required by the City approvals in 1990 in the event that the City chooses to improve Foothill Boulevard to the south of the Property in the future.

19. Trails.

The trails proposed in connection with the revised 150-unit plan will be owned by the Home Owners Association, along with all the other open space as described above. The H.O.A.'s Conditions, Covenants and Restrictions for the Project will require that these areas be adequately funded and properly maintained. While there will not be public ownership of these trails, they will, however, be "public trails" in that they will be available to the public to use and enjoy. The Project is not a gated community, and the public will have free access to use and enjoy the trails and other recreational amenities of the Project such as the park.

With regard to the use of a fence around large portions of the sensitive areas surrounding the pond, we differ to your judgement. The Dept. of Fish & Game has requested that no fences be employed, because wildlife can get caught in a fence. USFWS prefers a fence. Your staff colleagues suggest a partial fence. We continue to believe that use of any fence will restrict access to these local resources as required by the LCP. Accordingly, our revised 150-unit plan dated October 26, 1999, shows a 36" tall wood post fence with chain link and the plan shows the location we are proposing.

In connection with your question on the surface material proposed for the trails, we have not been able to identify any porous material that is suitable for handicap accessibility needs. For this reason, grass cover or use of rock is not an option. Originally, we proposed the use of asphalt because the trail network comprised an exceptionally minuscule amount of the non-porous area of the site. We have, however, identified another product called Road Oyl Resin Modified Emulsion pavement, which we suggest as an alternative to asphalt. Because the product is made from tree resin ingredients and contains no hazardous components, it has been used in locations like Yosemite National Park and for accessible trails in sensitive wetland and riparian areas where protection of water quality is a priority. This cold applied non-petroleum based emulsion product is described in the product literature, **Attachment I.**

20. Community Garden.

The community garden consisting of raised planter beds within a deer fence protected area is proposed in connection with the proposed revised 150-unit plan. The City did not approve, or designate specific water usage for, a community garden as this is a recent proposal. In any event, negligible amounts of water will be pumped from the pond to the garden so that the water levels of pond will not be significantly affected. In addition, wetlands near the proposed

community garden would not be affected by the garden as appropriate wetlands buffer zones will be incorporated in the Project and runoff from the garden will be controlled.

D. Rare and Endangered Species.

Steve Foreman addresses issues pertaining to rare and endangered species in his December 21, 1999 letter, **Attachment D**. I would like to add that the City relied on the Wetland Mitigation and Monitoring Plan (the "WMMP") as the Biological Report required for issuance of a CDP. The WMMP was distributed for comment to numerous agencies, including the City, the Water Quality Control Board, Department of Fish and Game, USFWS and the U.S. Corps of Engineers. As such, the requirements under Zoning Ordinance § 18.38.035 were satisfied when the City issued the CDP for the Project. The Biological Resources Report, dated June 15, 1999, as well as Steve Foreman's letter to Chris Kern, dated November 7, 1999, were prepared and submitted to the Coastal Commission to augment the WMMP in light of the appellant's claims of deficiencies in that report. This information was not re-distributed since there is no authority for the proposition that, in connection with an appeal of a CDP, any supplementing biological information submitted to the Coastal Commission must be re-distributed. Ailanto's obligation to distribute the WMMP was satisfied when the City was considering Ailanto's CDP application, as required by the LCP, and need not be repeated as part of this appeal.

With respect to whether the additional biological information that has been submitted to the Coastal Commission will be compiled and resubmitted in one package at this time, we believe there is no need for this. The Coastal Commission has all of the required information before it to act on this appeal. However, as Steve Foreman has indicated to you earlier, we will re-compile for your records all of the information already submitted to you (plus any other applicable forthcoming conditions) in a binder once this appeal is concluded.

E. Visual Resources: Trees and Grading.

1. Tree Removal.

The Property is currently cattle grazing land. As such, with the exception of the eucalyptus grove in the northeast corner of the Property, the line of cypress trees along the westerly Property-line, some willows along the drainages and another eucalyptus grove and some random non-native trees around the old ranch house location, the Property is primarily grasslands. Thus, there are remarkably few notable tree stands on the Property. And contrary to what some may have alleged, there are no Monterey Pines on the Property.

With respect to tree removal, the current plans are to remove an estimated 7 willow trees, 210 eucalyptus trees and 6 cypress trees. I have enclosed a tree removal location map compiled by MacKay & Somps, dated January 2000 as **Attachment J.** New trees are proposed to be planted at far more than the City's Tree Removal Ordinance requires and the landscape plan has already been reviewed by the City's Architectural Review Committee prior to the CDP application being filed. There are no major changes in the tree removal plan under the proposed 150-unit plan.

LUP Policy 7-9 requires new development to be sited and designed to minimize destruction or significant alteration of significant existing plant communities identified in the General Plan, including riparian vegetation along stream banks and notable tree stands. Similarly, Z.O. § 18.37.045 states that significant plant communities, including riparian vegetation along stream banks, notable tree stands and unique species must be preserved wherever possible. The Project will indeed minimize destruction and alteration of significant plant communities in that it will preserve riparian vegetation and significant trees, such as willows and cypress trees, wherever possible.

2. Upland Slopes.

The Project conforms to Z.O. § 18.37.035(A), which is part of the section setting forth upland slope standards. This section states that grading or creation of building sites that results in the alteration of natural terrain is prohibited on upland slopes and that constructed structures must be subordinate in appearance to the natural land form and follow natural contours. The Planned Unit Development Ordinance (which is also part of the certified LCP; the "PUD Ordinance") for the Project implements this goal to protect upland slopes by prohibiting the placement of "any building footprint" above the 160 foot contour. Z.O. 18.16.060. Specifically, the PUD Ordinance states, "in order to ensure that development does not occur above the 160 foot contour, deed restrictions shall be recorded against any lot which abuts or crosses the 160 foot contour." Id. The Project is in complete conformance with the prohibition on grading and alteration of upland slopes since no building footprint will be located above the 160-foot contour (i.e., the upland slopes).

The only exception to development above the 160 foot contour, pertains to the placement of a V-ditch (a concrete ditch that collects water to prevent run-off, stabilize soil and prevent erosion) above the home sites. However, this is permitted under 18.16.060(A), which allows land alteration, grading, vegetation or soil removal above the 160 foot contour "where and when necessary to correct or prevent erosion or other conditions related to the stability of the soils and the installation of facilities necessary to accommodate on-site drainage." The ditch will not be visible once completed and the area re-seeded.

3. Slopes in Excess of 25%.

The LUP recommends as a "proposed" development condition that no development be permitted on slopes in excess of 25%, or above the 160-foot contour, to ensure permanent retention of upland slopes on the Property. When the City approved the PUD Ordinance, which is also part of the LCP, (since the Coastal Commission certified the PUD Ordinance as part of the LCP's Implementation Plan), it limited development on slopes in excess of 25% except for the knoll area where Lots 119 to 125 are currently proposed. There is considerable discussion in the record on this matter concerning the intent of this requirement when the VTM was approved. The City based its decision on the fact that the knoll was significantly below the 160-foot contour, was hidden behind a dense eucalyptus grove and was less than 30 feet high. Accordingly, the City correctly concluded that the purposes for prohibiting development on slopes in excess of 25% (i.e., to protect visual resources and the upland slopes on the Property) did not apply to this one knoll. (Moreover, development of this knoll will improve the soil stability of this area.) Legally, the specific development controls of the PUD Ordinance, a part of the LCP, govern over the more general proposed conditions of the LUP. Thus, the proposed development on the knoll is consistent with the LCP.

4. Visual Resources Overlay.

The Visual Resources Overlay Map only applies to elevations above the 160-foot contour on the Property. See, also, Z.O. § 18.37.020(A) – (D).

F. Clustering and Open Space.

1. Clustering of Homes.

The Project is clustered and not a traditional pattern of individual lots as you suggest. The LCP states as a proposed development condition, that development on the Property "be clustered to the maximum extent feasible." This requires taking into account all areas containing wetlands, riparian areas and their buffer zones, open space requirements and areas in which development is not environmentally sound or desirable, such as on the hillside. LUP, p. 167. The PUD Ordinance, which is also part of the City's certified LCP, states that the Project is to be developed as "a detached single family residential development clustered within dedicated open space areas." Z.O. § 18.16.010. The PUD Ordinance is the specific plan, which implements this clustering concept with the specific design and development standards and the layout of the Project on the VTM (in fact, the PUD Ordinance flowed from the layout of the Project on the VTM). The VTM demonstrably sites the homes in clusters below the 160-foot contour, further clusters the project into sub-groupings between riparian corridors, and again further clusters development away from sensitive areas, and preserves the maximum amount of open space on

the Property as required by the LUP. Indeed, the total amount of open space with the proposed 150-unit revised plan is now estimated to be 58.7 acres, or 51.1 % of the Project! The previous 213 home plan contained 37.8% open space. These statistics for the revised 150-unit plan are on the Project Description, **Attachment K.** This is consistent with the purpose of the LCP in requiring clustered development on the Property: to preserve and protect as open space the maximum amount of the natural environment, including the hillsides and watersheds. Indeed, two City Councils have also found that the Project is clustered.

I have also enclosed the Contextural Site Plan, dated January 1999 as **Attachment L**, which was presented to the City Council in connection with our CDP application. I believe a picture tells a thousand words. Any reasonable person will notice the striking difference between a "clustered" project such as Pacific Ridge and the traditional non-clustered projects located to the west of Pacific Ridge as is demonstrated on this plan.

Furthermore, the extent to which the Project is clustered is made evident by the fact that there is *no way to further cluster the homes on-site without violating the setback requirements of the PUD Ordinance*. Most homes are at or near the setback limits. This proves that the clustering design concepts employed are used to the maximum extent possible to protect the scenic qualities of the site. We believe the Project will be one that the community will be very pleased with.

That the Project is clustered, was also explained by Mr. Greg Randall, Ailanto's landscape architect and land-planner, in the City Council hearing on the CDP on January 12, 1999. A transcript of his testimony is attached hereto as **Attachment M**.

2. Lots 37 to 59.

Contrary to your concerns, the proposed buildings on lots 37 to 59, whose structures would extend slightly above the 160-foot contour, will not impact views of the eastern hills. The PUD Ordinance prohibits only building *footprints* above the 160-foot contour level, and thus allows a building structure to exceed this height. **See**, Z.O. § 18.16.060(B). The Certified EIR comprehensively studied the Project's impacts on these hills and concluded that no impacts would occur. Story-poles were also erected for the February 9, 1999, site visit, as requested by the City Council, and they showed the extent to which these buildings (whose building footprints are located below, but near, the 160 foot contour) would blend in with existing development and would not impact views of the hills. In addition to this information, I have also enclosed the Site Section dated January, 1999 **(Attachment N)** and Site Sections, dated June 1998 **(Attachment O)**, which was also provided to the City Council during our CDP application. These sections show how the developable area of our project is generally between elevation 60 and 160 with the eastern hills rising up to elevation 575, which is far above any possible visual impacts.

Furthermore, a photo/computer imaged rendering was also prepared for the City Council's consideration of the CDP of which a copy is enclosed for your study, see **Attachment P**. As you can see, the homes on the Project will be difficult to observe from Route 1 due to the considerable distance to the Project, the existence of many trees along the Property line and because of the existing development in the foreground (along Route 1, at Grandview, Silver and Terrace). In addition to this, when other development, such as the Beechwood project is completed to our west, our project will be entirely blocked from view by these new homes in the foreground as was demonstrated by **Attachment Q**. This attachment is a copy of a rendering of a future view toward our Project from Route 1 in the vicinity of Bayview Drive, which was also part of our CDP application and presentation to the City. Finally, when the City approved our CDP, they added conditions which would further mitigate any concern on this item such as, indirect street lighting, muted exterior colors on the homes and additional landscaping along the western Propertyline and at homes adjacent to the 160- foot contour.

In summary, the issue of building structures encroaching above the 160-foot contour was addressed ad nauseum during the City's consideration of the CDP (as well as during the PUD Ordinance and VTM approval), and the conclusion always was the same: that the homes correctly comply with all aspects of the LCP.

3. Open Space.

The Project, as submitted, has no private open space areas. All open space is to be accessible to the general public. As stated above, when we submitted a CDP application to the City for 213 homes, the Project contained approximately 37.8% open space, which is nearly double the LCP's requirement for open space. With the proposed revised plan consisting of 150-homes, there will be 51.1 % open space. This figure does not include any developed common areas, such as streets and sidewalks. See **Attachment K** for a breakdown of the open space statistics.

G. Geologic Report.

The City's CDP condition number 67 states, "The city shall retain a geotechnical firm, at the applicant's expense, to evaluate the potential for debris flow hazards to the Pacific Ridge site from the adjacent property (to the east) to the satisfaction of the City Engineer." Since the City's decision on the CDP was immediately appealed to the Coastal Commission, this has not been done; however, this requirement is unnecessary. This requirement was imposed merely to allay the unsubstantiated concerns of one Planning Commissioner despite the overwhelming evidence that debris flow from the east is not an issue. Indeed, since the EIR found that there was no potential for landslides at the Property, two separate geotechnical firms have evaluated the risk of landslides and debris flow onto the Property and concluded that there was negligible to no

risk. See, Stephen Cassidy's letter to the Mayor Jerry Donovan and Members of the City Council, dated January 11, 1999, pp. 43 to 45, which is part of the record.

H. Initial Study, Biological Report, Geologic Report and Others.

Any allegation that there is information still lacking is completely erroneous. If anything, there has been an overabundance and duplication of studies, reports and the like prepared for the Project.

With respect to the seventeen categories of items required by Z.O. 18.15.035 that appellants allege are still missing, as noted in Anna Shimko's letter to Mr. Scholl, dated December 23, 1999, Z.O. Chapter 18.15 applies to the processing and approval of planned unit development plans. Ailanto's planned unit development plan was processed and approved in 1990, which resulted in the PUD Ordinance. Thus, Chapter 18.15 is wholly inapplicable.

The EIR was not used as a substitute for the biological report required under Z.O. Chapter 18.38. Rather, the WMMP served as the biological report and, as discussed earlier, was distributed as required. The Biological Resources Report submitted to the Coastal Commission, dated June 15, 1999, and other correspondence from Steve Foreman, dated November 2, 1999, augments the WMMP. Collectively, all of these plans and reports provide the information required under Z.O. Chapter 18.38, and any allegation that these plans and reports are flawed due to an inadequate wetlands delineation and an improper survey of rare and endangered species and habitat is completely without basis. As you know, John Dixon has already determined that the wetlands delineation submitted to the Coastal Commission was an accurate, and in his words, a conservative one.

As explained in Anna Shimko's letter to you and Steve Scholl dated December 23, 1999, the existence of rare and endangered species has been studied numerous times, and no rare and endangered species have ever been found on the Property. Steve Foreman addresses the history of rare and endangered species surveys in his letter of December 21, 1999, **Attachment D.**

With respect to the re-circulation of the biological information, please see Section D of this letter, above.

I. Measure A and Measure D.

The Project is not affected by Measure A, the residential growth initiative passed by the voters in 1991. The Residential Dwelling Unit Building Permit Allocation System Ordinance (located under Title 17 of the City's Municipal Code) (the "Building Permit Allocation Ordinance) implements the General Plan and LCP provisions mandated by Measure A. Section

17.06.015(E) of that Ordinance provides that "[a]ny residential development for which a vesting tentative map is either in process or has been approved prior to May 21, 1991" is exempt for the dwelling unit limitations and procedures of the Building Permit Allocation Ordinance. The VTM for the Project was approved in 1990.

Moreover, by virtue of Ailanto's vested rights under state law, Ailanto is not subject to City laws enacted after 1987, the point at which Ailanto's VTM application was deemed complete. Gov. Code § 66498.1(b).

Since the Project is exempt from Measure A, questions as to the current Measure A annual limitations and how they may be allocated to the Project are irrelevant.

The Project is likewise exempt from Measure D in that Measure D merely amends Measure A (from which the Project is exempt) by changing the annual population growth rate from 3% to 1%.

J. Other Questions.

Z.O. § 18.16.035 requires a minimum frontage of 30 feet on any street or cul-de-sac. The Project conforms to this requirement.

No new City permits would be required in connection with the proposed revised new plans for the Project submitted to the Coastal Commission on October 28, 1999. Of course, as would have been the case even without an appeal of the CDP, we will need to obtain building and grading permits from the City, but we will not need any further discretionary permits. In light of the proposed new plan, however, informal consultation with USFWS is now occurring to revisit and review the necessity of certain recommended mitigation measures previously adopted by the Corps.

The PUD Ordinance, including the underlying planned unit development plan, has not expired. First, absent a sunset clause or other similar express provision, a lawfully adopted City ordinance does not simply expire. Second, under the State Planning and Zoning Law, any permit (such as the PUD Ordinance approval here) that is issued by a local agency in conjunction with a tentative subdivision map for a planned unit development expires no sooner than the approved tentative map unless an earlier expiration is set forth in the permit. Gov. Code § 65863.9. The PUD Ordinance was adopted by the City Council in conjunction with the VTM in 1990 and contains no express expiration date. Thus, the life of the PUD Ordinance is, at minimum, coterminous with the VTM, which is still in effect.

Nor has the PUD Ordinance expired by virtue of Z.O. § 18.15.045(C). That section provides, "Unless otherwise approved by the City council [sic], a Planned Unit Development Plan shall expire two years after the effective date unless a building permit has been issued, construction diligently pursued, and substantial funds invested." This provision is merely the City's codification of the vested rights rule in California, which provides that where a property owner has been issued a building permit, performed substantial work and incurred substantial liabilities in good faith reliance of the permit or permits granted by the government, the property owner acquires a vested right to complete construction of the project in accordance with the terms of the permit or permits. See, Avco Community Developers, Inc. v. South Coast Regional Com., 17 Cal.3d 785 (1976). As such, § 18.15.045(C) is nothing more than an expression that a planned unit development plan will expire in two years unless the property owner has vested rights (or unless the City Council has provided otherwise). With respect to Ailanto's PUD Ordinance, Ailanto acquired vested rights to proceed with the Project when the City approved the VTM in conjunction with the PUD Ordinance. Moreover, the City's simultaneous approval of the VTM and the PUD Ordinance evidences the City's intent that the PUD Ordinance not expire within two years as the VTM had an initial life beyond two years. See, Gov. Code § 66452.6 and City's Subdivision Ordinance § 17.22.050. Thus, the two-year expiration provision of Z.O. § 18.15.045(C) is not applicable here and the PUD Ordinance and PUD Plan are still valid and effective.

Finally, it is even questionable whether Z.O. § 18.15.045(C) applies to the Project in light of Ailanto's vested rights to proceed with the Project in accordance with the laws in effect when Ailanto's VTM application was deemed complete in 1987. See Gov. Code § 66498.1(b). As far as we can ascertain, Z.O. § 18.15.045(C) was not in effect in 1987, and thus this provision does not apply to the Project.

Responses to the Carman and Wittrup appeal were provided to the Coastal Commission on December 23, 1999.

* * *

We hope that the above sufficiently answers your questions. Since this appeal was filed more than nine months ago, we look forward to a prompt final resolution of this appeal. In this connection, we respectfully request that the appeal be heard no later than March 2000. Ailanto cannot sustain any more delays than it already has with respect to the Project. Indeed, it has been almost ten years since the VTM and the PUD Ordinance were approved for the Project and almost two years since Ailanto first applied for a CDP for the Project with the City.

Thank you.

Sincerely,

Robert Henry

Robert Henry
Construction Manager

Cc: Anna Shimko, w/attachments
Nancy Lucast, w/o attachments
Steve Foreman, w/o attachments

Coastside Community Association
P.O. Box 111
Half Moon Bay, CA 94019
Voice / Fax: 650-560-9330

Jack Liebster
California Coastal Commission
45 Freemont Street, Suite 2000
San Francisco, CA
Fax 415-904-5400

RECEIVED
JAN 25 2000
CALIFORNIA
COASTAL COMMISSION

January 24, 2000

Dear Mr. Liebster:

Last March the Half Moon Bay City Council voted to approve a Coastal Development Permit for the Pacific Ridge (formerly Dykstra Ranch) planned unit development with "temporary" access to Highway 1 via Terrace Avenue. The approval was based on an initial study and negative declaration which found no significant traffic impacts from the 197 proposed houses in this project. This initial study and negative declaration were based on information over a decade old, and failed to take into account the changed traffic conditions in Half Moon Bay and on the San Mateo Coastside. In particular, the vehicular access issues were decided in the absence of the traffic studies required by our Local Coastal Program (LCP) and the Coastal Act. In short, the applicant failed to provide traffic studies demonstrating that adequate vehicular access exists. For this and other reasons, we appealed this decision to the California Coastal Commission.

In preparation for their hearing, the applicant has now submitted a traffic study dated January 12, 2000 by Fehr, Peers, and Associates. We have reviewed the study and have the following initial comments. This study analyzed the traffic flow under four scenarios: vehicular access via Terrace Avenue, via the proposed Bayview Drive (through the proposed Beachwood development), via Foothill Blvd., and via a combination of Bayview and Foothill. Their analysis was based on a number of assumptions. First, that the proposed expansion of Highway 92 and Highway 1 between North Main

and Kehoe will be completed. Second, that only one of the two or three cars garaged at each house in the new developments will be used. Third, that 42% of these cars will be traveling to or from destinations north on Highway 1, and only 40% would be traveling over the hill via Highway 92.

These assumptions do not represent current traffic conditions in Half Moon Bay, but rather a set of assumptions which bias the traffic study to a conclusion favorable to the developer. The study finds that under these unrealistic assumptions, that all intersections will operate at an acceptable level of service as required by our LCP. Based on our firsthand knowledge of traffic flows and patterns, more realistic figures would be 492 trips (from 197 houses) per peak hour, with approximately 80% of the traffic traveling to or from destinations via Highway 92. Using these figures, we find traffic on Highway 92, on North Main, on Highway 1, on Terrace, and on Bayview would be five times larger than reported in the Fehr study. Under these more realistic assumptions, we find that intersections would operate at levels of service F or worse, unacceptable under our LCP, even if both Bayview and Foothill were built.

The Fehr study goes on to state that in the absence of the expansion of Highway 92 (due to be completed by 2003) and of Highway 1 (projected completion by 2006), that the developments would have significant impacts on traffic unless either Foothill Blvd. or a combination of Bayview Drive and Foothill Blvd. were constructed. Thus, the traffic study concedes one of our original objections to the project. The existing transportation infrastructure cannot support these proposed new developments. If the developments are built now, in the absence of expanded highways, they would have significant impacts on our traffic flows. The study, flawed as it is, proves that the City Council was wrong to make a negative declaration finding no significant impact from traffic, and upholds the conclusions of the original EIR for Dykstra Ranch which found significant and unmitigatable impacts.

In order to enforce our Local Coastal Program and the Coastal Act, the City of Half Moon Bay must require the applicant to demonstrate the adequacy of infrastructure

STATE OF CALIFORNIA— THE RESOURCES A CY

GRAY DAVIS, GOVERNOR

CALIFORNIA COASTAL COMMISSION
NORTH CENTRAL COAST DISTRICT OFFICE
45 FREMONT, SUITE 2000
SAN FRANCISCO, CA 94105-2219
VOICE AND TDD (415) 904-5260

April 4, 2000

RE: **REVISED PROPOSED PLAN FOR PACIFIC RIDGE SUBDIVISION**
Appeal No.: **A-1-HMB-99-022**
Applicant: **Ailanto Properties**

To Whom It May Concern,

The California Coastal Commission has received a revised project description of the proposed Pacific Ridge development which is currently before the Commission for a *de novo* review and public hearing.

Copies of this revised project description have been distributed to the project appellants and the City of Half Moon Bay. You may obtain a copy of the description by contacting Lita Castillo at the Commission's North Central Coast Office at (415) 904-5260.

The staff is currently analyzing the revised proposed project, and you will be notified when a staff recommendation is available and the project is scheduled for hearing.

Yours sincerely,

Jack Liebster

Jack Liebster
Coastal Planner

A PROFESSIONAL CORPORATION

CASSIDY
SHIMKO
DAWSON

April 4, 2000

RECEIVED
APR 04 2000
CALIFORNIA
COASTAL COMMISSION

VIA HAND DELIVERY

Jack Liebster
California Coastal Commission
45 Fremont Street, Suite 2000
San Francisco, CA 94105

Re: Pacific Ridge/Appeal No. A-1-HMB-99-022
Project Description and Conditions

Dear Jack:

We are writing on behalf of our clients, Ailanto Properties, Inc., in response to your request for (1) a summary of the current proposal for the Pacific Ridge project (the "Project") pertaining to biological and water quality issues and (2) a list of the City of Half Moon Bay's CDP Conditions of Approval that still apply. In this connection, Ailanto and its consultants have reviewed the following documents:

- Wetlands Mitigation and Monitoring Plan prepared by RMI, Inc. (the "WMMP")
- Supplemental Biological Reports, dated June 15, 1999, September 28, 1999, October 22, 1999, and November 2, 1999
- City of Half Moon Bay's Conditions of Approval for CDP No. PDP 11-98
- Correspondence to Steve Scholl from Steve Cassidy, dated October 28, 1999.

The biological and water quality protection features of the latest Project proposal have been summarized in the document attached hereto as Exhibit A. As you know, due to the evolution of the Project, certain permits and requirements no longer apply to the Project. Most notably, the Clean Water Act section 404 permit issued by the U.S. Army Corps of Engineers for the filling of wetlands is no longer required since no wetlands will be filled in connection with the Project. Ailanto intends to continue with the minor construction activities near the pond, such as the placement of an outfall structure and weir, that were authorized by the section 404 permit. It is anticipated that such activities will be authorized by one or more nationwide permits from the U.S. Army Corps of Engineers. In addition, the WMMP, which was prepared to mitigate for the filling of wetlands, no longer applies since no wetlands will be filled; however, Ailanto has incorporated various measures from the WMMP (as well as some of the Section 404 permit conditions) into the current Project proposal in order to enhance habitat for the red-legged frog and the San Francisco garter snake. Such measures are described in more detail in the attached Exhibit A and include a bullfrog eradication plan and the planting of willows and coastal scrub.

20 CALIFORNIA ST. SUITE 500 SAN FRANCISCO, CA 94111 TELEPHONE: (415) 788-2040
FACSIMILE: (415) 788-2039

In terms of the Conditions of Approval imposed by the City of Half Moon Bay in connection with its approval of a coastal development permit for the Project, many of the conditions no longer apply due to the evolution of the Project. A list of the Conditions of Approval *as revised* to reflect the current Project proposal is set forth in Exhibit B hereto. A brief explanation for each revision is noted in italics and brackets. For your convenience, a red-lined version of the original Conditions of Approval are attached hereto as Exhibit C.

We hope that the information set forth above and in the attached exhibits is helpful. If you need any additional information or have questions, please do not hesitate to contact us. We look forward to a prompt resolution of the appeal.

Very truly yours,

Anna C. Shimko /lyn

Anna C. Shimko

Enclosures

cc: Bob Henry
Steve Foreman
Nancy Lucast
Yuri Won

January 21, 2000

City Council
City of Half Moon Bay
501 Main Street
Half Moon Bay, CA 94019

Honorable Council Members:

The developments, which are proposed for the Beachwood and Pacific Ridge properties, raise permanent vehicular access issues, which require resolution. The developers of Beachwood and Pacific Ridge have met to discuss these issues and agree in principle on the following points:

1.We understand that the residents of the City of Half Moon Bay are entitled to the peaceful enjoyment of their homes and neighborhoods, and to the protections afforded by the Land Use Plan, Zoning Ordinance, and Local Coastal Program.

2.The Pacific Ridge and Beachwood projects require certain and definite permanent vehicular access to their properties. Bayview Drive can provide this access for both properties.

3. Bayview Drive should be constructed according to the revised Circulation Element (approved by the planning commission but not yet approved by the City Council), with connections to Highway 1, Golden Gate Avenue, and to the Pacific Ridge project.

4. If Bayview Drive is constructed, there shall be no permanent vehicular access to these projects via local neighborhood streets (Terrace, Silver, Highland, or Grandview).

5. When Bayview Drive is available as a construction road, temporary construction access to Beachwood and Pacific Ridge shall be via Bayview Drive.

6. Pacific Ridge and Beachwood agree to be individually responsible via an assessment district or some other appropiate off-site infrastructure finance mechanism for necessary Hwy 1 improvements in the vicinity of the Bayview Drive intersection when those improvements are warranted. Their financial responsibility will be based on a proration of the number of buildable lots upon recordation of their respective final maps. Future developments which impact Hwy 1 (including but not limited to Glencree) and any public transportation funds, should also contribute to these improvements. No assessments for the above improvements shall be made on existing homes.

7. Pacific Ridge and Beachwood are willing to add the following improvements to the above financing mechanism to accommodate the existing and future traffic.

a) Pedestrian crossings at intersection of Bayview and Hwy 1 when the signal is approved by CalTrans.
b) right turn only in and out of Terrace and Grandview Avenues;
c) traffic calming devices (speed bumps) on Terrace, Golden Gate, and Grandview Avenues;
d) Emergency access to Pacific Ridge via breakdown barriers at the end of Terrace Avenue once Bayview Drive is available for use.

Beachwood and Pacific Ridge are under no legal obligation to pay for the full cost of the above improvements under any provision of local, state or federal law unless a nexus can be demonstrated. Notwithstanding, this statement we are willing to be responsible financially for these improvements if the final maps of both projects are recorded.

We respectfully request that the City Council immediately resolve all the access issues described above and notify the Coastal Commission of their decisions. Time is of the essence.

We make this statement of our preferences and intentions without waiving our respective legal rights.

Thank you for your consideration in this matter.

Sincerely,

William W. Crowell
Agent for owners of Beachwood
Joyce Yamagiwa, Trustee

Robert Henry
Ailanto Properties

cc: Blair King
George Carman

Jonathan Wittwer
William P. Parkin
Christiane Sinclair

WITTWER & PARKIN, LLP
147 SOUTH RIVER STREET, SUITE 221
SANTA CRUZ, CALIFORNIA 95060
TELEPHONE: (831) 429-4055
FACSIMILE: (831) 429-4067
E-MAIL: office@wittwerparkin.com

rcvd 2/16/00

February 15, 2000

HAND DELIVERED

Honorable Mayor and City Council
City of Half Moon Bay
501 Main Street
Half Moon Bay, CA 94019-1921

Re: Access Options for the Pacific Ridge Subdivision

Dear Mayor and City Council:

This office submits the following letter on behalf of the Coastside Community Association, concerning your consideration of access options for the Pacific Ridge Subdivision. I also submitted a letter to this Council on December 7, 1999. That letter is incorporated into this letter by reference and is attached hereto as Exhibit "A" for your convenience.

As my previous letter stated, the City improperly deferred determination of an access route until after the issuance of the CDP. Because the City did not consider primary access as part of the environmental review for the project, the City violated the California Environmental Quality Act ("CEQA"–Public Resources Code Section 21000, et seq.). CEQA requires that the City consider the "whole of an action" when it conducts environmental review and forbids project "segmentation" or "piecemeal" review. 14 CCR Section 15378.

The City Manager's Memorandum (and related attachments) to the City Council, dated February 1, 2000, pertaining to access to the Pacific Ridge Project provide some traffic analysis and biological analysis related to wetlands and endangered and threatened species. This information supports the Coastside Community Association's contentions that the City has "segmented" or "piecemealed" environmental review vis-a-vis the Pacific Ridge Project. The environmental review for the City's CDP approval of March 1999 should have considered this information and provided impact analysis pursuant to CEQA. Instead, the City failed to comply with CEQA's mandate that it consider the "whole of an action" because it did not perform any environmental analysis concerning access when the Council approved the CDP. For this reason, the only option for the City at this time is to reinitiate environmental review for the entire Pacific Ridge Project

Assuming, *arguendo*, that the City did not segment environmental review, the City cannot proceed with approval, or recommend an access alternative to the California Coastal

Commission, without performing further environmental review on the access component of the project. The City cannot claim an exemption or exception from environmental review, and because your action concerning access to the Pacific Ridge Project is entirely discretionary, environmental review must be performed before the City can proceed with approval of an access route. The additional analysis that is provided by City Staff for your review tonight was drafted without the benefit of public review and comment that is typically afforded citizens during a formal environmental review process pursuant to CEQA. The City Council's approval of an access route without environmental review would thwart the informational goals of CEQA, and allows the City to escape environmental review entirely at the expense of the public. As the California Supreme Court stated in *Concerned Citizens of Costa Mesa, Inc. v. 32nd District Agricultural Association* (1986) 42 Cal.3d 929, 936, members of the public hold a "privileged position" in the CEQA process. Such status reflects both

> "A belief that citizens can make important contributions to environmental protection and ... notions of democratic decision making."

The access component of this project raises serious procedural and environmental concerns. The Planning Commission determined that the project's anticipated traffic impacts on State Highway 1 at Main and on State Route 92 at Main could not be totally mitigated to acceptable levels due to contributions of cumulative traffic. Further, the proposed alignment of Foothill Boulevard is based on the representations of LSA Associates concerning the biotic impacts and location of wetland habitats. Given these facts, it is essential that the City follow procedures for formal environmental review pursuant to CEQA so that the public may formally review and scrutinize the information presented. The citizens of this community are entitled to a review and comment period, and environmental analysis in a format consistent with CEQA. It is clear that the City has not complied with these principles.[1]

---

[1] The consideration of access to the Pacific Ridge Project through the Beachwood Project site raises a completely new set of CEQA problems. Blair King's Memorandum to the Council, dated February 1, 2000, states that:

> "The Beachwood Project developers who own the projected right of way have indicated that they will dedicate the right of way only when the Beachwood Project is approved, and that they will aggressively oppose any attempt to acquire the right of way prior to project approval."

The environmental review for the Pacific Ridge Project that has been conducted to date fails the address the impacts of the Beachwood Project, the cumulative impacts of the Pacific Ridge Project and the Beachwood Project together, the growth inducing impacts of the Pacific Ridge Project if it indeed serves to foster the development of the Beachwood Project, and the possibility that the Beachwood Project and the Pacific Ridge Project become linked to the point where environmental review must consider the impacts of both projects at once.

For the foregoing reasons, I request that you reinitiate environmental review for the entire Pacific Ridge Project. Because the City has not yet performed environmental review vis-a-vis access to the Pacific Ridge Project, the Council cannot now choose an alternative until it has conducted formal environmental review.

Thank you for your consideration of these comments.

Very truly yours,

William P. Parkin

cc: Jack Liebster, Coastal Commission

Jonathan Wittwer
William P. Parkin
Tina Wallis
Christiane Sinclair

WITTWER & PARKIN, LLP
147 SOUTH RIVER STREET, SUITE 221
SANTA CRUZ, CALIFORNIA 95060
TELEPHONE: (831) 429-4055
FACSIMILE: (831) 429-4057
E-MAIL: office@wittwerparkin.com

December 7, 1999

HAND DELIVERED

Honorable Mayor and City Council
City of Half Moon Bay
501 Main Street
Half Moon Bay, CA 94019-1921

Re: Pacific Ridge Subdivision: Vehicle Access

Dear Mayor and City Council:

This office submits the following letter on behalf of the Coastside Community Association, concerning your consideration of providing permanent access to the Pacific Ridge Subdivision, for which a CDP was approved by this Council on March 16, 1999.

As you know, my clients have filed an action in San Mateo County Superior Court (Case # 409070) to overturn your decision to approve the Pacific Ridge Project. One of the allegations in that suit against the City was that the City failed to properly conduct environmental review vis-a-vis access to the Pacific Ridge Subdivision. The Council choose to designate Terrace Avenue as "temporary" access to the subdivision and deferred consideration of permanent access until a later date. In point of fact, the Council committed to determine permanent primary access to Pacific Ridge "within nine months of the approval of the Coastal Development permit...." *See* conditions of CDP for Pacific Ridge. Given the Council's promise to determine access within this time frame, the public has requested that the Council make its determination at today's City Council meeting.

My clients have raised the issue of access with this Council and in litigation. Of course, the legally correct time that the Council was required to determine access was when it approved the CDP on March 16,1999. As my clients' suit alleges, the City improperly deferred determination of access until after the issuance of the CDP, and that by not considering the primary access as part of the environmental review for the project, the City violated the California Environmental Quality Act ("CEQA"-Public Resources Code Section 21000, et seq.). CEQA requires that the City consider the "whole of an action" when it conducts environmental review and forbids project "segmentation" or "piecemeal" review. 14 CCR Section 15378.

Access to a subdivision is an absolute necessity for the project to be viable. Indeed, no person could argue that access to a subdivision is a critical component of the entire project. It is

EXHIBIT A

axiomatic that the choice of access for a large subdivision can cause considerable environmental impacts to the region and surrounding neighborhoods, and to the City's transportation infrastructure. Varying alternatives for access can also result in radically different environmental impacts. The analysis provided by the City Manager to the Council for today's Council meeting concerning the pros and cons of varying access alternatives is clear evidence of these principles.

The Dykstra Ranch Project, as approved by the City in 1990, designates Foothill Boulevard as the primary access to Pacific Ridge, and the negative declaration later approved by the City Council in 1999 for the CDP does not consider any permanent alternative for access. The dearth of information concerning alternative access in any environmental review for the Pacific Ridge Project is troubling and a clear violation of the CEQA.

The City is also bound by the dictates of its own zoning ordinances. Section 18.16.070 of the Half Moon Bay Zoning Code, which is specific to Dykstra Ranch, provides:

> "*That Foothill Boulevard shall be constructed with a connection to Highway 1* and all intersection improvements at Foothill Boulevard and State Route 92 and the proposed Bayview Drive and Highway 1 shall be installed prior to the issuance of any building permits for any additional units after the first 100 dwelling units are constructed...." [*Emphasis added*].

The City's own zoning ordinances condition Dykstra Ranch on the construction of Foothill Boulevard. As such, any proposal for Pacific Ridge to proceed without construction of Foothill Boulevard would violate the City Zoning Ordinances and Local Coastal Program.

My clients, however, are not advocates for the construction of Foothill Boulevard. Indeed, my clients' position is to the contrary. My clients support the Council's January 12, 1999 decision to not construct Foothill Boulevard through to Highway 1, because Foothill Boulevard would result in development and impacts to wetlands and environmentally sensitive habitats. Accordingly, its construction would violate the California Coastal Act.

My clients' position is that any determination as to permanent primary access to Pacific Ridge requires full environmental review of any proposed access and a full discussion of alternatives, particularly alternatives that avoid damage coastal resources and cause the least disruption to existing neighborhoods.

In order to meet the mandates of CEQA, the City has only one choice: begin the process of new environmental review for the entire Pacific Ridge Project that analyzes the "whole of an action", including access. If the City were to approve access without further environmental review, the City would be violating CEQA for failing to conduct environmental review on a discretionary project. *See* Public Resources Code Section 21065; 14 CCR Section 15357. If, on the other hand, the City were merely to conduct environmental review for only the access

component of the Project, without reviewing the entire project as the "whole of an action", the City would violate CEQA for "segmenting" or "piecemealing" environmental review. *See* 14 CCR Section 15378. Finally, if the Council chooses to take no action vis-a-vis access to Pacific Ridge, the Council would be violating a CDP condition of approval that requires the Council to determine permanent access within nine (9) months of the approval of the CDP. Given these options, the only choice that the City has is to begin anew environmental review for the entire Pacific Ridge Project.

Thank you for your consideration of these comments.

Very truly yours,

William P. Parkin

cc: Jack Liebster, Coastal Commission

file orig.

AILANTO PROPERTIES, INC.
ONE KAISER PLAZA / ORDWAY BUILDING / SUITE 1775
OAKLAND, CA 94612 • (510) 465-8888 • FAX (510) 465-5704

February 14, 2000

Via Mail & Fax

Mr. Jack Liebster
California Coastal Commission
45 Fremont Street, Suite 2000
San Francisco, CA 94105-2219

RECEIVED
FEB 16 2000
CALIFORNIA
COASTAL COMMISSION

Re: Pacific Ridge at Half Moon bay
CDP Appeal Number A-1-HMB-99-022

Hon. Mayor Dennis Coleman
And Members of the City Council
City of Half Moon Bay
501 Main Street
Half Moon Bay, CA 94019

Re Pacific Ridge Access Options
City Council Meeting of February 15, 2000

Ladies and Gentlemen:

We are writing to provide you with the relevant information to allow you to make informed recommendations with respect to the Pacific Ridge project. Some of this information has been requested by the Coastal Commission staff. Based upon the 1/12/00 traffic analysis by Fehr & Peers Associates, Inc. and with the help of their attached summary memo to me dated 2/13/00, we summarize the project's construction impacts, the project's impacts under various access alternatives and our proposed construction-phasing plan. The phasing plan described herein mitigates for all impacts.

As you will see, the City's 2/15/00 Staff Report for this item does not adequately address the complexities of this issue. We have explained those complexities below and offer a simple solution to the problems at hand.

A. Access Options and Mitigating Requirements

Several options exist for the project, which is currently proposed for 145 units. Summarized below as concisely as possible, are the various access options and the impacts of the 145 unit project and the necessary mitigating measures, if any, to make each access option viable.

With the widening of Route 1, the planned widening of Highway 92 and a consolidated intersection at either Bayview Drive or Terrace Avenue, the project would result in no project or cumulative significant impacts.

With the planned widening of Highway 92, but without the widening of Route 1 and a consolidated signal at either Bayview Drive/Route 1 or Terrace Avenue/Route 1, the project's impacts are as follows:

A.1. Terrace Avenue

If only Terrace Avenue is used for access to the project, there would be no significant project impacts, except at the Terrace/Route 1 intersection. Specifically, this significant impact would be triggered by the occupancy of more than 58 units. Mitigation for this significant impact would be by the installation of a signal at Terrace/Route 1 and the widening of Route 1 for a distance of 400 feet on either side of the Terrace/Route 1 intersection. Fehr & Peers recommends that these improvements occur prior to occupancy of any units because CalTrans' accident warrant for signalization of the Terrace/Route 1 intersection may already have been met due to past accident and injury incidences.

In the cumulative scenario, future significant impacts would also occur at Terrace Avenue and Route 1 *unless* this intersection is signalized and Route 1 widened for a distance of 400 feet on either side of the Terrace/Route 1 intersection. Additionally, there would also be a future cumulative impact at the Route 1/North Main Street intersection at the weekend peak hour once more than 126 homes are occupied. This impact would be mitigated by the City widening the balance of Route 1 between Terrace and Main Street, for which Ailanto Properties would pay for its fair share of the total cost.

A.2. Bayview Drive

If only Bayview Drive is used for access to the project, there would be no significant project impacts, except at Bayview Drive and Route 1. Like the Terrace option, in order for this significant impact to be mitigated, the intersection of Bayview Drive and Route 1 would need to be signalized and Route 1 widened for a distance of 400 feet on either side of the Bayview/Route 1 intersection.

In the cumulative scenario, the future impacts would be similar to the Terrace access option: there would be a significant future impact at Bayview Drive and Route 1 *unless* the intersection is signalized and Route 1 widened for a distance of 400 feet on either side of the Bayview/Route 1 intersection (of which a portion of this work has already been completed). Similarly, there would also be a future cumulative impact at the Route 1/North Main Street intersection at the weekend peak hour once more than 126 homes are occupied. This impact would be mitigated by the City widening Route 1 between Bayview Drive and Main Street, for which Ailanto Properties would pay for its fair share of the total cost.

A.3. Foothill Boulevard

If Foothill is used, for the sole access for the project, there would be no significant project impacts.

In the cumulative scenario, there would be no cumulative impacts.

A.4. Foothill Boulevard and Bayview Drive

If both Foothill Boulevard and Bayview Drive were used for access to the project, there would be no significant project impacts, except at the intersection of Bayview/Route 1. This impact would be mitigated by signalizing the Bayview/Route 1 intersection and widening Route 1 for a distance of 400 feet on either side of this intersection (of which a portion of this work has already been completed).

In the cumulative scenario, there would be no significant impacts.

B. Project's Construction Impacts

The City Council has already adequately addressed construction phase impacts when using Terrace Avenue. The specific Conditions of Approval, which mitigate construction impacts, are detailed in the City of Half Moon Bay's Council Resolution C-17-99 as follows:

#84 "The applicant shall obtain a grading permit to provide parking for all construction workers on site prior to commencement of grading or construction anywhere else on the site." (This mitigates for Terrace parking concerns.)

#85 "The applicant shall contact the Police Department 24 hours in advance, if 25 or more workers are to exit Terrace Avenue during the P.M. peak hour to allow the Police Department to provide some form of traffic control at the intersection of Terrace Avenue and Highway 1 if they deem necessary. The applicant shall reimburse the City for any costs related to such traffic control during the construction period." (This mitigates for Terrace/Route 1 intersection safety concerns.)

#87 "The applicant shall maintain Terrace Avenue free and clear of dirt and debris during the period that construction activities access the site from Terrace Avenue. This maintenance shall be done to the satisfaction of the City Engineer." (This mitigates for any construction dust and debris.)

#88 "The applicant shall insure that heavy construction vehicles are placed on the project site from Terrace Avenue during non-peak commute hours. The applicant shall provide the Police Department 24 hours in advance of such activity." (This mitigates for peak hour traffic impacts of the construction trucks.)

In addition to these mitigation requirements, we can also add speed humps on Terrace Avenue to reduce vehicle speeds. The neighboring community has requested the speed humps. Also, it should be noted that the Pacific Ridge project is a balanced grading design. Accordingly, the construction truck traffic should consist only of necessary material and equipment deliveries.

C. Project Phasing Plan

Given the uncertainty with respect to the construction of future roads (such as Foothill Boulevard and Bayview Drive), we have formulated a phasing plan for construction of the project, which properly mitigates all impacts using the currently available road to the project (i.e., Terrace Avenue), until such time as other access route(s) become available.[1] The project-phasing plan summarized below includes all of the necessary mitigation measures required to reduce impacts to a level below significance. As you know, Terrace Avenue is not a cul-de-sac, but an existing paved road connected to the Pacific Ridge property-line to which we have abutter's rights. Construction traffic can be adequately mitigated as described above and started prior to any intersection improvements at Terrace Avenue and Route 1. Specifically, the project-phasing plan is as follows:

PHASE 1: The Pacific Ridge project begins construction work with the construction traffic accessing the project via Terrace Avenue. The construction phase mitigation measures outlined above are immediately instituted.

PHASE 2: The intersection improvements at Terrace and Route 1 consisting of a traffic light and widening for the additional lane requirements (400 feet on each side of the intersection) are designed, permitted, funded and constructed by Atlanto Properties concurrently with the Pacific Ridge construction. It is anticipated that less than 15 homes will be constructed – but not occupied - prior to the Terrace intersection improvements being completed.

PHASE 3: Once the above Terrace/Route 1 intersection improvements are completed, the Pacific Ridge homes can be occupied and accessed via Terrace Avenue. The Terrace/Route 1 intersection will then be operating in a far superior level of service than is existing now.

PHASE 4A: Once another permanent access to Pacific Ridge is made available, the traffic light at Terrace/Route 1 may be removed and knock down barriers at the Terrace

[1] In this connection, we note that George Carman's request, on behalf of Coastside Community Association, that construction of the Project be precluded until off-site access improvements are made, due to construction impacts, is not legally justifiable. First, as demonstrated herein, there are no construction impacts which will not be properly mitigated to below a level of significance. Second, based on the project's impacts summarized in this letter, there is no legal nexus by which to preclude construction until the access improvements are constructed. See, e.g., Dolan v. Tigard, 512 U.S. 374 (1994); Rohn v. City of Visalia, 214 Cal.App3d 1463 (1989).

Avenue/Pacific Ridge property-line can be installed, thereby converting this access to an emergency vehicle access. The permanent access route recommended by Ailanto Properties is detailed in the letter signed with Mr. William Crowell and addressed to the City Council Members dated January 21, 2000.

PHASE 4B: Because the project cumulative traffic contribution causes the Route 1/Main Street intersection to deteriorate to level of service F (on weekends only) when the project occupancy reaches 126 units, Ailanto Properties will contribute its fair share of the Route 1 improvements between Terrace and Main Street at this point.

It is not known whether phase 4A or 4B will occur first and they should be considered interchangeable. It should be noted that Ailanto Properties expects to start project grading in the spring or summer of 2001. With this start date, the final project completion will not occur until approximately December of 2005. This long schedule will allow for a smooth transition for these requirements to occur. Consequently, this phasing plan is not only legal and meets all necessary requirements; it is the only plan which makes perfect sense. Ailanto Properties respectfully requests that the City Council and Coastal Commission accept this plan.

Thank you.

Sincerely,

AILANTO PROPERTIES, INC.

Robert Henry

Robert Henry
Construction Manager

Cc: Blair King
Anna Shimko
Bill Crowell
Annie Mudge
Steve Scholl
Rob Rees

enclosure

Copy

COASTSIDE COMMUNITY ASSOCIATION
P. O. Box 111, Half Moon Bay, CA 94019
Voice/Fax: 650-560-9330 Email: CoastsideCommunity@att.net
Dedicated to preserving our quality of life on the Coastside.

NOTICE: A copy of this correspondence has been provided to Coastal Commission Staff as required by *ex parte* communication rules.

March 7, 2000

Sara Wan, Chairperson
California Coastal Commission

45 Freemont, Suite 2000
San Francisco, CA 94105-2219

22350 Carbon Mesa Rd.
Malibu, CA 90265

Dear Chairperson Wan:

We wish to bring to your attention the enclosed documents which pertain to appeal A-1-HMB-99-022 of the Pacific Ridge Project in Half Moon Bay, CA.

1. Resolution of the Loma Prieta Chapter of the Sierra Club, dated November 8, 1999.
2. Letter from Debbie Ruddock, Director, Loma Prieta Chapter, Sierra Club, dated December 2, 1999.
3. Letter from David Iverson, Director, Half Moon Bay Open Space Trust, dated December 6, 1999.

These documents demonstrate the support of the Sierra Club for the substantial issues raised in the aforementioned appeal, and of the Half Moon Bay Open Space Trust for providing an alternative to the residential development of the project site.

Please share this information with your fellow Commissioners. We ask that the Commission please consider this information when hearing the appeal for findings of substantial issue, and during any subsequent *de novo* review of the project as a whole.

We thank you for your kind attention.

Sincerely,

Theodore Herhold

Theodore Herhold, for the
Coastside Community Association

cc: Jack Liebster, California Coastal Commission, 45 Freemont, Suite 2000, San Francisco, CA 94105

SIERRA CLUB • LOMA PRIETA CHAPTER
San Mateo • Santa Clara • San Benito Counties

Pacific Ridge Project

Whereas, Pacific Ridge is located within the Coastal Zone and enjoys the protections of the Coastal Act and the certified Local Coastal Program of the City of Half Moon Bay; and

Whereas, the proposed project includes development within wetlands and environmentally sensitive habitat areas and their buffer zones; and

Whereas, the proposed development would result in indirect take by reduction of the habitat for the red-legged frog and the San Francisco garter snake, and,

Whereas, the proposed project includes development above the 160 foot contour and obstructs views of the eastern foothills which are recognized as visual resources; and,

Whereas, the proposed project requires the cutting of significant tree stands; and,

Whereas, the environmental review documents for the project are now more than ten years old, and do not reflect the changed conditions and new information on natural resources;

Now therefore be it resolved that the Loma Prieta Chapter of the Sierra Club is in opposition to the proposed development of Pacific Ridge in Half Moon Bay by Ailanto Properties.

Be it further resolved that the Loma Prieta Chapter of the Sierra Club opposes construction of Foothill Blvd.

Be it further resolved that the Loma Prieta Chapter of the Sierra Club supports the acquisition of Pacific Ridge lands and their dedication to passive open space and habitat in perpituity.

Be it further resolved that the Loma Prieta Chapter of the Sierra Club asks the City Council of Half Moon Bay to oppose any development of Pacific Ridge and assist in its acquisition.

Passed November 8, 1999

Sierra Club • Loma Prieta Chapter
3921 East Bayshore Road, Suite 204
Palo Alto, CA 94303
415 390-8411
FAX 415 390-8497

Recycled Paper

SIERRA CLUB
FOUNDED 1892

December 2, 1999

Mayor Dennis Coleman
City of Half Moon Bay
501 Main Street
Half Moon Bay, CA 94019

Dear Mayor Coleman:

On behalf of the Executive and Conservation committees of the Loma Prieta Chapter of the Sierra Club, I am forwarding to you and the City Council the Chapter's adopted resolution opposing the Pacific Ridge development (see attached).

Please note that, in addition to requesting the City Council to oppose Pacific Ridge, the resolution opposes the construction of Foothill Boulevard as inconsistent with the National Club's transportation policies. The Chapter also requests that the City assist efforts to acquire the Pacific Ridge property for permanent public open space.

Please don't hesitate to contact me if you have any questions about our Chapter's action. You may also contact our Conservation Chair Bill Michel at 510/574-6417 or <b1michel@aol.com>.

Also, please place the Loma Prieta Chapter on the mailing list for notifications of future meetings on the Pacific Ridge project. Thank you.

Sincerely,

Debbie Ruddock

Debbie Ruddock
Chapter Director

Cc: City Council, City Manager and Staff, George Carman

Loma Prieta Chapter 3921 East Bayshore, Palo Alto, CA 94303 TEL: (650) 390-8411 FAX: (650) 390-8497

David Iverson, Director
Half Moon Bay Open Space Trust
P.O. Box 291
Half Moon Bay, CA 94019

California Coastal Commission
45 Freemont Street
San Francisco, CA

December 6, 1999

Honorable Members of the Coastal Commission:

This letter is to inform you that the Half Moon Bay Open Space Trust (HOST) has designated the Dykstra Ranch parcel as a candidate for acquistion and dedication to open space in perpetuity. Our intention is to provide a constructive alternative to the proposed Pacific Ridge development by Ailanto Properties.

There are many reasons why dedication of this parcel to open space would be the best use of Dykstra Ranch. Among them are the scenic views of the eastern foothills of our City, which are protected by our Land Use Plan and Local Coastal Program which forbid construction above the 160 foot elevation. The proposed Pacific Ridge development would include homes extending to 190 foot elevation, permanently destroying these scenic views. Acquisition and dedication of this parcel to open space would protect these views in perpetuity.

We are currently seeking funding for this and other acquistions from a number of sources, including the Packard Foundation and various private donors. If we can provide any further information, please do not hesitate to contact us.

A copy of this correspondence is being provided to Coastal Commission staff as required by ex parte communication rules.

Sincerely,

David Iverson
Director, HOST

cc: Jack Liebster and Steve Scholl, California Coastal Commission

COASTSIDE COMMUNITY ASSOCIATION
P. O. Box 111, Half Moon Bay, CA 94019
Voice/Fax: 650-560-9330 Email: CoastsideCommunity@att.net
Dedicated to preserving our quality of life on the Coastside.

NOTICE: A copy of this correspondence has been provided to Coastal Commission Staff as required by *ex parte* communication rules.

March 10, 2000

Sara Wan, Chairperson
California Coastal Commission
45 Freemont, Suite 2000
San Francisco, CA 94105-2219

RECEIVED
MAR 14 2000
CALIFORNIA
COASTAL COMMISSION

Dear Chairperson Wan:

We wish to bring to your attention the following information relevant to our appeal A-1-HMB-99-022 of the Pacific Ridge Project in Half Moon Bay, CA. In the following we make reference to the *Zoning Code* Title 18 of the City of Half Moon Bay, relevant portions of which are enclosed for your convenience.

Failure to Notice Public Hearing for Coastal Development Permit

In our appeal, we contend that the City failed to comply with notice requirements of *Coastal Development Permit Required* 18.20. Specifically, *Notice Required* 18.20.060 provides that the City shall give notice of its review of the Coastal Development Permit not less than 10 days before any public hearing by publication of a notice in a newspaper of general circulation, by mailing of notices to property owners within 100 feet of the property, and by posting of notice at the property site and in adjoining neighborhoods (see attachment 1).

The applicant claims that the public hearing of 02/09/99, which was conducted at the proposed development site, was the final public hearing for the project, and that the next City Council meeting of 03/16/99 was not a public hearing. The applicant is incorrect. While it is true that the hearing of 02/09/99 was adjourned (not continued), the City did hold an additional public hearing on 03/16/99. The City Council did open the session to the public that evening, and did take comments from numerous members of the public. These facts are reflected in City Council resolution C-17-99, which states: "the City Council held duly noticed public hearings on January 12 and 24, 1999, February 9, 1999, and March 16, 1999, at which meetings all those in attendance were given an opportunity to be heard on the matter; ..." Furthermore, these facts can be proven true and correct by a review of the video tapes of both hearings, which have been previously submitted to the Commission.

Once the hearing had been adjourned on 02/09/99, any subsequent public hearing on this project was not a continuation of the previous public hearing, and required new notification. However, no such notification was provided for the hearing of 03/16/99. As evidence of the lack of such notification we submit letters from residents Marcus Max Gunkel, Eric and Kristen Fuchs, Mark Zborowski and Elizabeth Flood, and Jean Callaci and James Murray (see attachment 2). We therefore claim that the City failed to provide notice of the public hearing on 03/16/99 as required by 18.20.060.

Failure to Conduct Hearings on Variances

Even if the project as originally proposed on May 19, 1998 had been properly noticed, the project as approved by the resolution of March 16, 1999 contained significant variances from provisions of the *Zoning Code,* and significant amendments to the *Planned Unit Development Plan*. In particular, at no time in the 11 year history of the project had there been any prior consideration of vehicular access of any kind via Terrace Avenue. We contend that this and the scores of other changes to the project were so substantial that they required either variances from the Zoning Code 18 or amendments of the *Dykstra Ranch Planned Unit Development Plan* 18.16.

Variances, Chapter 18.23, provides that "variances from the specific terms of the [zoning ordinance] may be granted provided when such variance will not be contrary to the intent of the [zoning ordinance], nor to the public interest, safety, health, and welfare ... A variance may also be granted when it will not ... materially affect adversely the health or safety of persons residing or working in the neighborhood of the property ... and will not ... be materially detrimental to the public welfare or injurious to property improvements in the neighborhood" (see attachment 3).

Testimony given at the public hearings provided a basis for findings that the variance in proposed access was contrary to the health and safety resulting from large increases in traffic through local neighborhood streets, and disruption of emergency vehicle access due to greatly diminished levels of service at the only intersections which serve the neighborhood. Furthermore, testimony provided a basis for findings that the variance in proposed access would be materially detrimental to the public welfare by disrupting the circulation patterns and coastal access, and injurious to property improvements by damage to pavement by heavy construction vehicles and increasing runoff into an already overflowing storm drain system (for which there is no Coastal Development Permit on record).

This Chapter goes on to require *Application, Public Hearing, and Notice* (18.23.030) for consideration of a variance by the Planning Commission. We note that no such public hearing was scheduled and no public notice provided. We contend that the resolution of March 16, 1999 allowed variances from the Zoning Code without giving the public the benefit of due process and hearing.

Failure to Conduct Hearings on Amendments

Furthermore, *Planned Development Land Use* 18.15 specifies that *Amendment of a Planned Unit Development Plan* 18.15.050 shall follow the procedures for application, review, and adoption of a Planned Unit Development Plan (see attachment 4). *Review of a Planned Unit Development Plan* 18.15.030 states that such review shall be in accordance with the process established in this Title, including but not limited to ... public notice and public hearings. Specifically, this Title includes *Amendments* 18.24, which provides that amendments may be proposed by resolution of intention by the City Council, resolution of intention by the Planning Commission, or application by the property owner. In all cases 18.24.020 requires a public hearing with notice at least ten days in advance by publication in a newspaper of general circulation, and optional additional notification by posting or mailing of public notices (see attachment 5).

We contend that the *Dykstra Ranch Planned Unit Development* 18.16 was amended by the resolution of March 16, 1999. Specifically, the *Streets, Traffic, and Circulation* 18.16.070 specifies that:

> "the following criteria shall apply to the initial phase of development and all subsequent phases ... That Foothill Boulevard shall be constructed with a connection to Highway 1 and all intersection improvements at Foothill Boulevard and State Route 92 and the proposed Bayview Drive and Highway 1 shall be installed prior to the issuance of any building permits"

In contrast, *Resolution* C-17-99, *Coastal Development Permit for Pacific Ridge Subdivision* shows Terrace Avenue as the only access to the project, and *Exhibit A, Conditions of Approval* 17 provides:

> "until such time as other permanent access is available, temporary access shall be provided to the site via Terrace Avenue. Within nine months of the approval of the Coastal Development Permit, the City shall determine the permanent primary access to the site"

However, during subsequent consideration of permanent access on 12/06/99 and 02/15/00 the City Council failed to approve any such access, leaving Terrace Avenue as the only approved access to the project. We contend that the issuance of a Coastal Development Permit, plus the failure for the City to determine the permanent primary access, together constitute an amendment of the *Dykstra Ranch Planned Unit Development* which occurred without due process and notification.

This and scores of other amendments to the Planned Unit Development should have been introduced by application of the property owner or by resolution of intention by the Council. Neither occurred; instead Council allowed these amendments in violation of 18.15 and 18.24 without giving the public the benefit of due process and hearing.

Summary

Given that the City failed to notify the public of on the Coastal Development Permit we ask the Commission to determine that a substantial issue exists with respect to the City's failure to properly notify the public of the hearing on March 16, 1999.

In light of the emphasis of the Coastal Act on public participation, and failure of the City to follow due process in these hearings, we ask that you direct the City to cure and correct its errors as follows. (1) Circulate a notice to all members of the public who may be directly or indirectly impacted by this project. Traffic impacts from this project are likely to affect all residents of the San Mateo County coastside. (2) Accept responsibility for the costs of public attendance and commentary at any *de novo* hearing of this appeal before the Coastal Commission. Such attendance requires travel to a possibly remote location and loss of wages which presents a significant hardship for many, and has the effect of limiting public participation in such hearings. The City needs to be sent the message that it must provide due process and notification as required by the Zoning Code, which is part of its Local Coastal Program.

Please consider this information when hearing our appeal for findings of substantial issue, and during any subsequent *de novo* review of the project as a whole. We thank you for your kind attention.

Sincerely,

George J. Carman, for the
Coastside Community Association

cc: Jack Liebster, California Coastal Commission, 45 Freemont, Suite 2000, San Francisco, CA 94105

C. **Concurrent processing and hearings.** A public hearing on a Coastal Development Permit may be held concurrently with any other public hearing on the development.

18.20.060 Notice Required. The City shall provide notice of all applications for a Coastal Development Permit as follows:

A. **Contents of Notice.** All notices shall include the following information:

1. A statement that the development is within the Coastal Zone;

2. The name and address of the applicant;

3. The file number assigned to the proposed development, and the date the application was filed;

4. A description of the proposed development, including its location;

5. The date, time and place of the public hearing on the Coastal Development Permit, if required, or where no public hearing is required, the date the application will be acted upon by the local governing body or decision-maker; the date by which comments on the proposed Coastal Development Permit must be received; and the address to which these comments should be sent;

6. A brief description of the review process for the Coastal Development Permit, including, where applicable, hearings, public comment periods, submission of public comments prior to decisions, any requirements for Coastal Resource reports, local action and appeals. Where the proposed development is located within the appealable area of the coastal zone, the notice shall state that local actions on the Coastal Development Permit are appealable to the Coastal Commission by any aggrieved person.

B. **Provision of Notice.** The city shall give notice of its review of the Coastal Development Permit, as follows:

1. Publication of Notice. The City shall publish a notice for public hearings on any Coastal Development Permit for the development one time at least ten calendar days before the public hearing. The City shall publish a notice for any Coastal Development Permit not requiring a public hearing one time at least ten days before the end of the public comment period on the Coastal Development Permit. All notices required by this Section shall be published in a newspaper with general circulation in the City. If a public hearing is continued to a date and time that is not specified at the public hearing, notice of the continued public hearing shall be published and distributed in the same manner and the same time limits as for the initial notice.

2. Mailing of Notices. At least seven (7) calendar days prior to the first public hearing or prior to the City's decision where no public hearing is required, the City shall mail a notice of the public hearing or pending decision for any Coastal Development Permit to the following:

a. The applicant;

b. The owner of the property or his or her authorized agent;

c. Each local agency providing water, sewage, streets, roads, schools or other essential facilities or services to the development;

d. The owners of all real property, as shown on the latest equalized assessment roll, within 100 feet of the site of the development for appealable developments and for non-appealable developments which do not require a public hearing, and within 300 feet of the site for non-appealable developments requiring a public hearing;

e. All persons who have requested, within the preceding year, notice of all actions on Coastal Development Permits within the City or on the particular site of the development or who have requested notice of all actions affecting any or all designated Coastal Resource Areas;

f. The Coastal Commission; and

g. All residents with 100 feet of the site of the development.

3. Posting of Notices. At the time an application for coastal development permit is filed (or within 7 days), the applicant must post public notice at a conspicuous place, easily read by the public and as close as possible to the site of the proposed development, notice that an application for a permit for the proposed development has been submitted to the City. The applicant shall use a standardized form provided by the Planning and Building Director and the notice shall contain a general description of the nature of the proposed development. If the applicant fails to post and maintain the completed notice form until the permit becomes effective, the Planning and Building Director shall refuse to file the application, or shall withdraw the application from filing if it has already been filed when he or she learns of such failure.

4. Notice of Decision. Within seven (7) calendar days of any decision by the City Council, or within seven (7) days of expiration of the local appeal period on decisions made by the Planning Commission or Planning and Building Director, the Planning and Building Director shall mail notice of the decision to the Coastal Commission, and to any person identified in Item 2e above, and shall include findings for approval and any

conditions of project approval if approved, or any findings for denial if denied to the applicant, and procedures for appeal of the local decision to the Coastal Commission.

18.20.065 Conditions. The approving authority may apply conditions to a Coastal Development Permit as necessary to ensure conformance with, and implementation of the Local Coastal Program. Modification and resubmittal of project plans, drawings and specifications may be required to ensure conformance with the Local Coastal Program.

18.20.070 Findings Required. A Coastal Development Permit may be approved or conditionally approved only after the approving authority has made the following findings:

A. **Local Coastal Program.** The development as proposed or as modified by conditions, conforms to the Local Coastal Program;

B. **Growth Management System.** The development is consistent with the annual population limitation system established in the Land Use Plan and Zoning Ordinance;

C. **Zoning Provisions.** The development is consistent with the use limitations and property development standards of the base district as well as the other requirements of the Zoning Ordinance;

D. **Adequate Services.** Evidence has been submitted with the permit application that the proposed development will be provided with adequate services and infrastructure at the time of occupancy in a manner that is consistent with the Local Coastal Program; and

E. **California Coastal Act.** Any development to be located between the sea and the first public road conforms with the public access and public recreation policies of Chapter 3 of the California Coastal Act.

18.20.075 Appeals and Finality of City Action. Development under an approved Coastal Development Permit shall not begin until all applicable appeal periods expire or, if appealed, until all appeals, including those to the Coastal Commission, have been exhausted. Grounds for an appeal of a Coastal Development Permit issued pursuant to this Chapter shall be limited to an allegation that the development does not conform to the standards set forth in the Certified Local Coastal Program or the Coastal Access policies of the Coastal Act.

A. **Action by the Planning and Building Director.** Action by the Planning and Building Director to approve, conditionally approve or deny any

ATTACHMENT 2

DECLARATION

I, Marcus Max Gunkel, do hereby declare as follows:

1) I am a resident and homeowner at 530 Silver Avenue, Half Moon Bay, California. This is the Terrace Avenue / Highland Park area of Half Moon Bay, an area directly adjacent to and which abuts the proposed Ailanto Properties development called Pacific Ridge.

2) My understanding is that on Tuesday, March 16, 1999 the Half Moon Bay City Council voted to approve a Coastal Development Permit for the Pacific Ridge development and temporary access to this development through our neighborhood on Terrace Avenue.

3) Myself, and over thirty other neighbors with whom I have spoken in our neighborhood did not receive due notice of this proposed action by our City Council. My understanding is that before action on a proposed approval for a Coastal Development Permit can take place, there must be at least 10 days notice in a newspaper of general circulation, all property owners within 100 feet of the proposed development must be also notified, and the property proposed for development itself and adjoining neighborhoods must also receive notice. None of this occurred.

4) Because I did not receive adequate notice of the City Council's proposed actions, I was precluded from being able to participate and speak at the meeting on March 16, 1999 where the City Council approved the Coastal Development Permit for the Pacific Ridge development. Had I been able to so, I would have brought to the City Council's attention the following.

5) I have either personally observed or seen the tracks of the following on Pacific Ridge:

a) Mammals: coyote, gray fox, boar, cougar, coastal black tail deer, bobcat, raccoon, possum, cottontail rabbit, and skunk;

b) Raptors: golden eagle, California black hawk, red tailed hawk, Cooper's hawk, sharp shinned hawk, great horned owl, barn owl, kestrel, peregrine falcon, and turkey vulture;

c) Waterfowl: Mallard, widgeon, cinnamon teal, ruddy duck, Canada geese, snow geese, Aleutian geese, and coot;

d) Upland game birds: band tailed pigeons, mourning dove, California quail;

e) Snakes: San Francisco garter snake, red / yellow garter snake;

f) Additional birds: great blue heron, great egret, lesser snowy egret, green heron, northern oriole, California towhee, western meadowlark, European starling, redwing blackbird, barn swallows, cliff swallows, gold finches, dark eyed juncos, clapper rail, assorted sparrows and sea gulls;

g) There are also many different types of frogs, whose names I do not know.

I declare under penalty of perjury and the laws of the State of California that the foregoing is true and correct. Executed this 2nd day of April, 1999, at Half Moon Bay, San Mateo County, California.

Marcus Max Gunkel

Mr. and Mrs. Eric Fuchs
699 Terrace Ave.
Half Moon Bay, CA 94019
(650) 712-1906

March 27, 1999

To Whom It May Concern:

We are writing this letter to express our concerns and anger with the way the Half Moon Bay City council granted a Coastal Development Permit for the Pacific Ridge project that granted construction access via Terrace Avenue.

To our knowledge, zoning requirements require the city to notify residents (general public) of hearings for a CDP at least 10 days before a hearing by newspaper, posted notices and direct mailings. We did not receive any advanced notice of the hearing on March 16th from the city. It was by chance that a neighbor found out about the proposed use of Terrace Avenue as the main construction access and informed us of the hearing *the night before the meeting.*

The city did not provide the required adequate advanced notice to the residents of Highland Park, and more specifically the residents of Terrace Avenue. We strongly oppose the use of Terrace Avenue as access for the Pacific Ridge development (whether temporary or permanent). We request an appeal for the CDP granted to Pacific Ridge on March 16th.

Sincerely,

Eric and Kristen Fuchs

March 26, 1999

Mr. and Mrs. Mark Zborowski
590 Terrace Avenue
Half Moon Bay, CA 94019

Mr. and Mrs. George Carman
657 Terrace Avenue
Half Moon Bay, CA 94019

Dear Mr. and Mrs. Carman:

As with you, neither of us received any notification of any kind from the City of Half Moon Bay regarding the recent hearings for a Coastal Development Permit for Pacific Ridge.

We are deeply concerned that we were not afforded our legal right as residents of Half Moon Bay to be notified of such a hearing and to subsequently attend that meeting.

We hope this letter makes it absolutely clear that we do *not* want Terrace Avenue to become the access road for this construction project.

Sincerely,

Mark W. Zborowski

Elizabeth S. Flood

Elizabeth S. Flood

March 26, 1999

City Council
City of Half Moon Bay
Half Moon Bay, CA 94019

To Whom it May Concern:

My husband and I are writing to express our disapproval of the use of Terrace Avenue as access of any type for the development of the Pacific Ridge Subdivision. Further, we object to the deliberate neglect to follow appropriate zoning ordinances, including the one which requires the City to duly notify us of any hearings related to the Pacific Ridge.

We are voters, taxpayers, and law-abiding citizens of Half Moon Bay, residing at 534 Silver Avenue. We expect the City to strictly follow all required ordinances and laws.

As a result of the fact that this has not happened, we expect this project and it's approval be halted until the appropriate ordinances and laws are abided by.

Please respond to this letter.

Jean Callaci & James Murray
534 Silver Avenue
Half Moon Bay, CA 94019

Jeancallaci@yahoo.com

Sincerely,

Jean Callaci James Murray

ATTACHMENT 3

CHAPTER 18.23

VARIANCES

Sections:

18.23.010 When May Be Granted
18.23.020 Application--Procedure--Map
18.23.030 Application--Public Hearing--Notice
18.23.040 Application--Public Hearing--Decision
18.23.060 Expiration Date--Extension
18.23.070 Application--Resubmittal After Final Disapproval
18.23.080 Applicability Of Section 18.23.090
18.23.090 Application--Planning Commission Action

18.23.010 When May Be Granted. Variances from the specific terms of this Title may be granted when such variance will not be contrary to the intent of this Title, nor to the public interest, safety, health and welfare, where due to special considerations or exceptional characteristics of the property or its location or surroundings, a literal enforcement of this Title would result in practical difficulties or unnecessary hardship. A variance may also be granted to permit the extension of a district where the boundary line thereof divides a lot or parcel of land in one ownership at the time of the adoption of this Title. A variance may also be granted to permit buildings or structures to exceed the building height limit in R-3, C-G, C-VS, IND, OS-A and PUD Districts whenever it appears that the granting of such application will not, under the circumstances of the particular case, materially affect adversely the health or safety of persons residing or working in the neighborhood of the property of the applicant and will not, under the circumstances of the particular case, be materially detrimental to the public welfare or injurious to property or improvements in the neighborhood.

18.23.020 Application--Procedure--Map.

A. Application for any variance permissible under the provisions of this chapter shall be made in writing to the Planning Commission on forms provided by the Commission. The application shall be signed and verified by the owner of the land involved or by his authorized agent. If application is made by a person other than the owner, written authorization to act on behalf of the owner shall be submitted with such application. An application may also be made on behalf of one who is or will be plaintiff in an action in eminent domain to acquire the premises involved.

B. The application shall show or be accompanied by the legal description of the property for which the variance is requested, and the street address, if there is one, or other common description of the premises.

C. The Zoning Administrator or the Planning Commission may also require that the application be accompanied by a map drawn to scale showing the location of the property concerned and the location of all highways, streets and alleys, and all lots and parcels of land within a distance of five hundred feet from the exterior boundaries of the property involved. The accuracy of such map shall be the responsibility of the applicant.

18.23.030 Application--Public Hearing--Notice. Upon receipt of any application, the Planning Commission shall hold at least one public hearing thereon, notice of which shall be given in the manner hereinafter provided. Such notice shall contain the street address or other description of the property for which the application is sought, and set forth the time, place and general purpose of the hearing:

A. By mailing a postal card notice not less than ten days prior to the date of the hearing to the owners of property, as shown on the last equalized assessment roll, within three hundred feet of the exterior limits of the property or properties which are the subject of the application for the variance; or by both of the following:

B. Publication one time in a newspaper of general circulation in the city, at least ten days before the date of said hearing; and

C. Posting notices in the same manner as set forth in this Title for a proposed amendment. Provided, however, that the failure to give such notice or of any addressee to receive the same, shall not invalidate or affect any proceedings taken pursuant to this chapter.

18.23.040 Application--Public Hearing--Decision.

A. At such hearings, the applicant may present testimony and other evidence in support of his application, and other interested persons may be heard and/or present evidence on the matter.

B. The burden shall be on the applicant to show:

1. That there are exceptional or extraordinary circumstances or conditions applying to the land, building or use referred to in the application which circumstances or conditions do not apply generally to the land, buildings and/or uses in the same district;

2. That the granting of the application is necessary for the preservation and enjoyment of substantial property rights of the petitioner;

3. That the granting of such application will not, under the circumstances of the particular case, materially affect adversely the health or safety of persons residing or working in the neighborhood of the property of the applicant, and will not, under the circumstances of the particular case, be materially detrimental to the public welfare or injurious to property or improvements in said neighborhood.

C. After the conclusion of the aforesaid hearing, the Planning Commission shall make a written finding of facts showing whether the three foregoing requirements have been established with respect to the land, building or use for which the variance is sought, and make its determination as to the granting or denial of the application for a variance.

D. In approving the granting of any variance under the provisions of this chapter, the Planning Commission shall impose such conditions in connection therewith as will, in its opinion, secure substantially the objectives of this title as to light and air, and the public health, safety, morals, convenience and general welfare. It shall also require such evidence and guarantees as it deems necessary to obtain compliance with the conditions imposed in connection therewith.

18.23.050 Appeal to City Council. The applicant or any interested property owner aggrieved by a determination of the Planning Commission may appeal to the City Council within ten days from the date of such determination. Said appeal shall be taken to and heard by the City Council, in the same manner as is provided in this title for appeals with reference to the granting or denial of applications for use permits.

18.23.060 Expiration Date--Extension.

A. Unless otherwise expressly stated in the granting thereof, every variance approved under the provisions of the ordinance codified herein shall lapse and expire and be of no force and effect whatsoever, unless the building, work of construction or other project or undertaking for which the variance was granted is substantially commenced within six months after its effective date and thereafter diligently prosecuted to completion.

B. In any case where the Planning Commission shall determine that the exercise of rights under a variance has not been so commenced within six months or diligently prosecuted to completion, it may enter its findings upon the minutes and advise the applicant or owner thereof. Said determination shall become final unless an appeal therefrom is taken to the City Council with the time and in the manner provided in Section 18.23.050.

C. Nothing herein shall prevent the Planning Commission, for good cause show, and upon application in writing made prior to the expiration of said six month

period, from extending the time for the exercise of said rights for one additional period of six months.

18.23.070 Application--Resubmittal After Final Disapproval. An application for a variance that has been finally disapproved may not be resubmitted for a period of one year from final disapproval unless the application has been substantially changed.

18.23.080 Applicability of Section 18.23.090. The provisions contained in Section 18.23.090 shall be applicable in all R-3, C-G, C-D, C-VS, and IND districts, and in all Planned Unit Developments containing R-3 commercial or manufacturing uses otherwise included in the district regulations applicable to said districts.

18.23.090 Application--Planning Commission Action. Approval of an application for design approval shall be secured for the construction of any building or structure or substantial addition thereto. Said application shall be accompanied by a plot plan and drawings or sketches showing the elevations of the proposed buildings, structures, planting, paving and other improvements, as the same will appear upon completion. Such drawings or sketches shall be considered by the Planning Commission in an endeavor to provide that such buildings, structures, planting, paving and other improvements shall be so designed and constructed that they will not be of unsightly or obnoxious appearance to the extent that they will hinder the orderly and harmonious development of the city, impair the desirability of residence, investment or occupation in the city, limit the opportunity to attain the optimum use and the value of the land and the improvements, impair the desirability of residence, investment or occupation in the city, limit the opportunity to attain the optimum use and the value of the land and the improvements, impair the desirability of living or working conditions in the same or adjacent areas, and/or otherwise adversely affect the general prosperity and welfare. To this end, the Planning Commission shall recommend any changes in the plan of such proposed buildings, structures, planting and paving and other improvements as it deems necessary to accomplish the purposes of this section and Section 18.23.080, and shall not recommend approval of any such plans to the City Council until it is satisfied that such purposes will be accompanied thereby. No building permit shall be issued unless the plans filed with the application therefor, as required in this section and Section 18.23.080, shall first have been approved by the City Council.

18-23 • AUG 1, 1993

CHAPTER 18.15

PLANNED DEVELOPMENT LAND USE

PUD	Planned Unit Development Zoning District

Sections:

18.15.010 Intent and Purpose
18.15.015 Applicability and Zoning Designation
18.15.020 Rezoning to a Planned Unit Development District
18.15.025 Permitted Land Uses
18.15.030 Review of a Planned Unit Development Plan
18.15.035 Content of a Planned Unit Development Plan
18.15.040 Required Findings of Fact
18.15.045 Adoption of a Planned Unit Development Plan
18.15.050 Amendment of a Planned Unit Development Plan
18.15.065 Status of a Previously Adopted PUD Plan

18.15.010 Intent and Purpose. This District is intended to provide for a variety of land uses, such as attached and detached single-family residential development, multiple-family housing development, professional and administrative areas, commercial and industrial uses, institutional uses, and public and private open space and recreation opportunities through the adoption of a comprehensive development plan as set forth in the City of Half Moon Bay General Plan and this Chapter. The intent of establishing the Planned Unit Development District is to:

A. Implement the plans and policies of the adopted City of Half Moon Bay Land Use Plan, or General Plan, and the Land Use Plan Map;

B. Establish regulations and procedures for the preparation, review, and approval of Planned Unit Development Plans to guide the orderly development of land within this District;

C. Establish a procedure for the administration of Specific Plans and Precise Plans, prepared in accordance with the State Government Code and consistent with the Half Moon Bay Land Use Plan;

D. Provide for the classification and development of parcels of land as coordinated, comprehensive projects so as to take advantage of the superior environment that can result from requiring that an entire area be planned as a unit and developed under a single plan;

E. Encourage the assembly of properties that might otherwise be developed in unrelated increments to the detriment of surrounding properties, neighborhoods, and the City;

F. Avoid piecemeal development and provide for the replatting of old subdivisions for development under a comprehensive planning document;

G. Avoid monotony by allowing greater flexibility in the design and development of land within this District;

H. To ensure that a minimum of 20% of the site area in any Planned Unit Development is provided in public and/or private open space;

I. Encourage variety and diversification of land uses; and

J. Provide flexibility required for achievement of coastal access goals. protection of coastal resources, provision of open space and recreation areas, and avoidance of siting structures in hazardous areas.

18.15.015 Applicability and Zoning Designation.

A. The Planned Unit Development District may be applied to areas within the City that are designated for planned development by the City of Half Moon Bay General Plan - whether for a Planned Unit Development, Specific Plan, Precise Plan or other similar development plan - and to other areas within the City subject to the approval of a Planned Unit Development Plan. The provisions of this Chapter shall apply to the preparation, review and adoption of Specific Plans developed consistent with the City of Half Moon Bay General Plan and State Government Code Sections 65450 through 65456.

B. A PUD District shall be indicated on the zoning map by the designation "PUD".

C. The minimum site area for a Planned Unit Development District or Planned Unit Development Plan shall be one acre.

18.15.020 Rezoning to a Planned Unit Development District. Reclassification of land from any District to the Planned Unit Development District shall be in accordance with the procedures specified herein and in this Title. A rezoning amendment to a Planned Unit Development District may be initiated in one of two ways:

A. **Initiated by Property Owner(s).** An application for a Rezoning from any District to the Planned Unit Development District may be filed by a

2. Temporary Uses and Structures in Excess of 90 Days. The Planning Commission may authorize the temporary use of structures or land in any Planned Unit Development District for periods of time in excess of 90 days, subject to the review and approval of a Use Permit in each case. In approving a Use Permit for the temporary use of structures or land, the Planning Commission may impose whatever conditions deemed necessary to assure that the purpose and intent of the General Plan and this Chapter are carried out. The Use Permit shall establish a specific point in time when the temporary use is to be terminated and the site restored. The Planning Commission may authorize additional extensions of time for temporary Use Permits at a duly noticed public hearing.

18.15.030 Review of a Planned Unit Development Plan. Planned Unit Development Plans shall be reviewed in accordance with the process established in this Title, including, but not limited to, required plans and materials, public notice, and public hearings, subject to the following additional requirements:

A. At least 30 days prior to submitting an application for a Planned Unit Development Plan, or an amendment to a previously approved and adopted Planned Unit Development Plan, the applicant shall consult with the Planning Director to ensure that any proposal submitted will be consistent with the provisions of this Chapter and the General Plan, and to begin the early consultation process for any required environmental documentation and conformance with the Residential Dwelling Unit Building Permit Allocation System Ordinance.

B. At such time as the Planning Director determines that an application meets the requirements of this Title in a form acceptable to the Planning Director, it may be accepted as complete.

18.15.035 Content of a Planned Unit Development Plan. Applications for Planned Unit Development Plans shall be submitted in a format approved by the Planning Director. In addition to any other information required by this Chapter and any information and materials required for a zoning amendment under this Title, any application for adoption of or an amendment to a previously approved Planned Unit Development Plan shall, at a minimum, include the following information and materials:

A. A detailed description of the proposed uses and their densities and intensities;

B. A map showing the district boundaries and the relationship of the uses and densities and intensities proposed with any existing uses within a 300-foot radius of the site;

C. A map or maps showing all of the following on the site and within a 300-foot radius from the boundaries of the proposed Planned Unit Development:

N. A schedule of anticipated development, including the anticipated commencement of construction and occupancy and the timing of any subsequent phases;

O. A completed subdivision application that meets the requirements of Title 17 where the proposed Planned Unit Development Plan includes the subdivision of land;

P. A description of any proposed management organization, such as a homeowners association, that will be responsible for the perpetual maintenance of any common areas; and

Q. Any other plans or information determined to be necessary by the Planning Director.

18.15.040 Required Findings of Fact. The Planning Commission shall not forward its recommendation, and the City Council shall not approve a Planned Unit Development Plan unless the following required findings for approval are made and incorporated into the adopted Planned Unit Development Plan:

A. That the Planned Unit Development Plan is consistent with the adopted General Plan, this Chapter, and all other applicable policies and Ordinances of the City;

B. That the Planned Unit Development Plan is compatible with surrounding land uses;

C. That the adoption and implementation of the Planned Unit Development Plan will result in superior design and development of the site;

D. That the Planned Unit Development Plan meets the requirements of any annual dwelling unit allocation system adopted by the City;

E. That adoption and implementation of the Planned Unit Development Plan will not exceed the capacity of existing or planned infrastructure systems, including but not limited to sewer, water, natural gas, electricity, police and fire protection;

F. That, if adequate utilities, infrastructure, and public services are not available to serve all of the proposed development possible under the Planned Unit Development Plan, the plan contains phasing controls or requirements for utility improvements that ensure that demands from proposed development does not exceed utility capacity;

ATTACHMENT 5

CHAPTER 18.24

AMENDMENTS

Sections:

18.24.010 Resolution of Intention--Application
18.24.020 Application--Hearing--Notice
18.24.030 Recommendation by Planning Commission
18.24.040 Council Hearing--Notice
18.24.050 Resolution Of Intention by City Council
18.24.060 Decision by City Council
18.24.070 Withdrawal of Petition
18.24.080 Hearing--Notice--When Not Required
18.24.090 Application--Resubmittal After Final Disapproval
18.24.100 Certification of Local Coastal Program Amendments

18.24.010 Resolution of Intention--Application. This title may be amended by changing the boundaries of districts or by changing any other provisions hereof whenever the public necessity and convenience and the general welfare require such amendment, by following the procedure specified in this chapter. Amendments may be proposed by:

A. Resolution of intention of the City Council; or by

B. Resolution of intention of the Planning Commission;

C. Property owners, their duly authorized agents, or a plaintiff in an action in eminent domain, by filing a verified application with the Planning Commission for amendments to this Title involving their property or property to be acquired by the plaintiff in an action in eminent domain.

D. Any application made pursuant to subsection C shall be in writing and signed and verified by the owner of the land involved or by his authorized agent. If the application is made by a person other than the owner, written authorization to act on behalf of the owner shall be submitted with such application. The application shall show or be accompanied by the legal description of the property for which the amendment is requested, and the street address or addresses, if any, or other common description of the premises. The Planning Commission may also require that the application be accompanied by a map drawn to scale showing the location of the property concerned and the location of all highways, streets and alleys, and all lots and parcels of land within a distance of five hundred feet from the exterior

boundaries of the property involved. The accuracy of such map shall be the responsibility of the applicant.

18.24.020 Application--Hearing--Notice. Upon the receipt of such an application, the Planning Commission shall consider the requested amendment and may, if it so determines, adopt its resolution of intention to propose an amendment as requested, or in its discretion, different from that petitioned for. Upon the adoption of such resolution of intention by the Planning Commission, it shall set a hearing thereon and give notice thereof by at least one publication in a newspaper of general circulation in the city at least ten days before the hearing and may give additional notice by either one or both of the following means when the amendment involves reclassification of property:

A. Posting public notices of the proposed amendment not less than ten days prior to the date of the first of such hearings. Such notices shall be placed not more than three hundred feet apart along each and every street upon which the property proposed to be reclassified abuts and such posting shall extend along the said street or street a distance of not less than three hundred feet from the exterior limits of such property or properties as are proposed for reclassification. such notice shall consist of the words, "Notice of Proposed Change of Land Use District," printed or lettered in plain type or letters not less than one inch in height, and in addition thereto, there shall be a statement in smaller type setting forth a description of the property involved in the proposed change of district, the time and place at which the public hearings on the proposed change will be held, and other information which the Planning Commission deems necessary;

B. Mailing a postal card notice not less than ten days prior to the date of such hearing to the owner or owners of all property within three hundred feet of the exterior boundaries of the property proposed to be reclassified, as said owners are shown on the last equalized assessment roll of the city.

C. Any failure to post public notices or to mail postal card notices as aforesaid shall not invalidate any proceedings taken for the amendment of this Title.

D. The Planning Commission may hold such additional hearings as it may deem necessary.

18.24.030 Recommendation by Planning Commission. Following the aforesaid hearing or hearings, the Planning Commission shall make a report of its findings, summaries or hearings, and recommendations with respect to the proposed amendment and shall file such reports with the City Council within thirty days from the final hearing thereon. If the Planning Commission proposes to recommend adoption of the proposed amendment, such recommendation shall be by resolution of the Commission carried by the affirmative

votes of not less than two-thirds of its total voting members and shall likewise be filed with the City Council within thirty days from the final hearing thereon..

18.24.040 Council Hearing--Notice. The City Council may hold one or more public hearings upon the proposed amendment and before adopting the proposed amendment shall hold at least one public hearing thereon, notice of which shall be published at least once in a newspaper of general circulation in the city at least ten days before the hearing. At the conclusion of such hearing, the City Council, if it so determines, may adopt an ordinance amending this title in accordance with the proposal of the Planning Commission. The City Council may not make a change in any amendment proposed by the Planning Commission until the proposed change has been referred to the Planning Commission for a report and such report received.

18.24.050 Resolution of Intention by City Council. The City Council may adopt its own resolution of intention to amend this Title when it deems it to be for the public interest, but shall not adopt an amendatory ordinance until it shall have first referred such proposal to the Planning Commission for a report. Before making a report, the Planning Commission shall hold at least one public hearing in the same manner as heretofore prescribed. The failure of the Planning Commission to make such report within forty days after the reference to it shall be deemed an approval of the proposed change. Upon receipt of such report or the expiration of time above mentioned, the City Council may proceed to hold a hearing as provided in Section 18.24.040, at the conclusion of which it may adopt an ordinance amendment this Title.

18.24.060 Decision by City Council. The decision of the City Council shall be rendered within ninety days after the receipt of a report and recommendation from the Planning Commission.

18.24.070 Withdrawal of Petition. Upon the consent of the Planning Commission, any petition for an amendment may be withdrawn upon the written application of a majority of all the persons who signed such petition. The City Council or the Planning Commission, as the case may be, may by resolution abandon any proceedings for an amendment initiated by its own resolution of intention; provided, that such abandonment may be made only when such proceedings are before such body for consideration and provided that any hearing of which public notice has been given shall be held.

18.24.080 Hearing--Notice--When Not Required. No notice of hearing as prescribed by this chapter need be given with respect to any hearing before either the Planning Commission or the City Council where the proposed amendment does not involve the changing of district boundaries or the changing of property from one district to another.

18.24.090 Application--Resubmittal After Final Disapproval. An application for an amendment to this Title which has been finally disapproved may not be resubmitted

for a period of one year from final disapproval, unless the application has been substantially changed. Nothing herein shall preclude the City Council or Planning Commission from at any time initiating proceedings for amendments to this zoning ordinance or zoning map at any time.

18.24.100 Certification of Local Coastal Program Amendments. Any proposed amendment to the Local Coastal Program shall not take effect until it has been certified by the Coastal Commission. Any amendment approved by the City shall submitted to the Coastal Commission in accordance with Sections 30512 and 30513 of the Public Resources Code. An amendment to this Local Coastal Plan as certified by the Coastal Commission shall not become effective after City Council adoption until the amendment is submitted pursuant to the requirements of Section 13551 et seq. of the California Code of Regulations and also certified by the California Coastal Commission pursuant to Chapter 6, Article 2, of the California Coastal Act.

18-24 • JAN 17, 1995

ATTACHMENT 6

CHAPTER 18.16

DYKSTRA RANCH PLANNED UNIT DEVELOPMENT

PACIFIC RIDGE

PUD–X	Dykstra Ranch PUD Zoning District

Sections:

18.16.005	**Purpose**
18.16.010	**Intent**
18.16.015	**Phasing of Development**
18.16.020	**Amendment Required**
18.16.025	**Permitted Uses**
18.16.030	**Prohibited Uses**
18.16.035	**Residential Development Standards**
18.16.040	**Recreational Facilities**
18.16.045	**Development Adjacent to Sensitive Habitat**
18.16.050	**Preservation of Streams, Wetlands Habitats, and Lake**
18.16.055	**Preservation of the Pond**
18.16.060	**Development Above the 160 Foot Contour**
18.16.065	**Grading, Soils, and Drainage**
18.16.070	**Streets, Traffic, and Circulation**
18.16.075	**Water and Sewer Service**
18.16.080	**Noise**

18.16.005 Purpose. The purpose of this Planned Unit Development Plan is to guide the orderly development of the Dykstra Ranch property consistent with the goals, objectives, and policies of the City of Half Moon Bay Local Coastal Plan and Municipal Code. The development standards set forth herein represent the required conditions imposed upon the development in conjunction with the approval of the Vesting Tentative Map, the mitigation measures set forth in the Certified Final Environmental Impact Report, and the requirements of the Site and Design Permit.

18.16.010 Intent. It is the intent of the City of Half Moon Bay and the property owner that the Dykstra Ranch property shall be a detached single family residential development clustered within dedicated open space areas. The Planned Unit Development Plan will serve as the Zoning Ordinance for the 115 acre Dykstra Ranch property as shown on the Dykstra Ranch Planned Unit Development Plan, incorporated herein as Exhibit A to this Ordinance. Prior to issuance of any permits for development on the property, all appropriate conditions set forth herein and in the Final Subdivision Map shall be incorporated into the final project plans.

18.16.015 Phasing of Development. This development is to be constructed in phases. It is recognized that there are several requirements contained herein that obligate

18.16.035 Residential Development Standards. The following design and development criteria shall be incorporated into any proposed residential construction:

A. **Minimum Lot Size:** The minimum lot size for any residential development site shall be 6,500 square feet, with a minimum average lot width of 65 feet. A minimum frontage of 30 feet shall be provided on any street or cul-de-sac;

B. **Building Footprints:** A building footprint shall be established for each lot and shall be shown on the Final Map. All structures including the residence, detached garages, decks, privacy fencing, and accessory buildings or facilities shall be constructed within the building footprint for each lot as established on the Final Map. The minimum standards or criteria for establishing the building footprint for each lot shall be as forth in this Chapter;

C. **Residential Building Setbacks:**

1. All building setbacks shall be measured from the back of sidewalk where provided and from the back of curb where no sidewalk is provided;

2. These standards shall apply to the residential structure, attached and detached garages, and all accessory buildings;

3. No encroachments of any kind are permitted within any required yard setback area except:

a. Eaves, which may encroach a maximum of two feet into any required yard setback area;

b. Fireplaces and chimneys, which may encroach a maximum of two feet into any required yard setback area;

4. A minimum front yard setback area of 18 feet shall be maintained for all portions of the residential structure;

5. Each lot shall maintain a minimum side yard setback area of five feet provided there is a minimum separation of 15 feet between residential structures on adjacent or contiguous lots;

6. A minimum rear yard setback area of 20 feet shall be maintained for all portions of the residential structure. In those cases where the residential building site abuts a required habitat buffer zone or other environmentally sensitive area designated on the Final Map, the Planning Commission may establish a reduced or increased rear yard setback area, which shall be reflected on the building footprint established for the lot on the Final Map;

3. Privacy fencing shall be limited to a maximum height of six feet as measured from the highest point of the fence to grade directly below.

H. Landscaping:

1. All introduced landscaping shall be of drought tolerant species;

2. Landscaping shall be designed and maintained to ensure adequate sight distance at all street corners and intersections.

18.16.040 Recreational Facilities. The following shall apply to the public and private recreational facilities within the Dykstra Ranch Planned Unit Development:

A. A clubhouse and community center may be provided for the project residents. These facilities would be owned and maintained by the project Homeowners Association;

B. The design and location of the clubhouse and community center shall be subject to the review and approval by the Planning Commission of a Site and Design Permit as set forth in the City of Half Moon Bay Zoning Code;

C. Land shall be offered for dedication for public parks as provided for in the City of Half Moon Bay Municipal Code. Said offers of dedication may be phased in conjunction with the recordation of Final Maps;

D. Private park and recreation facilities may be provided within the Dykstra Ranch Planned Unit Development for the exclusive use of the residents of the project. Any private park shall be owned and operated by the Homeowners Association and shall be shown on the Final Map;

E. A recreational trail network for pedestrians may be provided within the open space areas. Said recreational trail network shall be designed, constructed, and maintained in a manner consistent with the intent, purpose, and contents of this Ordinance. Said trail shall provide a minimum width of three feet and shall be paved with crushed and rolled rock or other suitable all weather surface. If deemed necessary and appropriate by the Planning Director, the proposed location of the trail shall be subject to the review and approval of the California Department of Fish and Game and the Army Corps of Engineers;

F. If future conditions warrant, other recreational facilities may be provided for the residents of the development. The Planning Director shall review any proposed public or private recreational facilities not specifically addressed in this Ordinance or shown on the Dykstra Ranch Planned Unit Development Plan. If

A. That approval by the United States Army Corps of Engineers is required for any activities involving the streams and drainage courses;

B. Each development phase will require consultation with the California Department of Fish and Game to insure that the streams and habitats are adequately protected. A 1601 Permit issued by the Department of Fish an Game maybe required for each phase of the development;

C. That the discharge of any swimming pool water or any other materials into any of the creeks, streams, drainage courses, or the lake is strictly prohibited;

D. That the proposed check dams in the intermittent creek channels shall be approved by the Department of Fish and Game and Army Corps of Engineers. The existing dense vegetation shall be preserved to the maximum extent practicable. Any required thinning of the existing vegetation shall be kept to a minimum in order to reduce potential erosion of the stream banks.

18.16.055 Preservation of the Pond.

A. The following policies, programs, and requirements shall be conformed with at all times

1. The existing agricultural pond shall be retained and upgraded as a visual amenity and wildlife habitat;

2. Swimming, boating, fishing, and any other form of contact or non-contract activity on or in the lake is strictly prohibited;

3. Life safety and emergency equipment, including an emergency telephone shall be installed and maintained adjacent to the lake at a location approved by the Police Chief and Fire Chief;

4. That all areas of the pond that are less than four feet in depth shall be lined with either a gas permeable membrane, concrete, cemented cobbles, or other material approved by the Department of Fish and Game and Army Corps of Engineers that will prevent aquatic plants from rooting on the pond bottom;

5. That in order to limit the amount of nutrients entering the pond, a slight trough shall be constructed around the perimeter. Surface runoff shall be collected in this trough and routed to the approved storm drain system;

D. That the developer shall provide financing for equipment and training to meet the Half Moon Bay Fire Protection District specifications in order to ensure that emergency rescue operations related to the pond are possible.

18.16.060 Development Above the 160 Foot Contour. The following shall apply to all properties that have a portion of the lot above the 160 foot contour:

A. There shall be no land form alteration, grading, vegetation or soil removal, or above or below grade construction of any kind above the 160 foot contour as shown on the Final Map except where and when necessary to correct or prevent erosion or other conditions related to the stability of the soils and the installation of facilities necessary to accommodate on–site drainage. Where remedial work is performed above the 160 foot contour, the site will be graded, planted, and otherwise returned to its natural state or as it existed prior to the commencement of the remedial work;

B. That no part of any building footprint for any lot shall be permitted above the 160 foot contour, as shown on the Final Map;

C. That in order to ensure that development does not occur above the 160 foot contour, deed restrictions shall be recorded against any lot which abuts or crosses the 160 foot contour. Said deed restrictions, the form and content of which is satisfactory to the City Attorney, shall restrict all grading, landscape removal, and above or below grade construction activity or improvement of any kind to the 160 foot contour or below. Deed restrictions shall be recorded at the time Final Maps are recorded.

18.16.065 Grading, Soils, and Drainage. The developer and any successors in interest or assigns shall be subject to the following minimum criteria for the initial and subsequent phases of development:

A. That all site preparation and grading shall be in conformance with an approved grading plan, prepared by a licensed engineer based upon the Harlan, Miller, and Tait report dated June, 1986, or other geotechnical report approved by the City Engineer; MAP NEED UPGRADE

B. That an erosion control plan and a drainage plan shall be prepared by a licensed engineer that conforms with all applicable codes and policies of the City of Half Moon Bay, the Association of Bay Area Governments (ABAG), the Department of Fish and Game, the Army Corps of Engineers, and the provisions of this Chapter;

Moon Bay, any public park and recreational facilities within the Dykstra Ranch Planned Unit Development required by the City of Half Moon Bay Park Dedication Ordinance shall be replaced outside the development at a location approved by the City Parks and Recreation Commission and City Council, unless access and public parking is available from a dedicated public street.

18.16.075 Water and Sewer Service. Inasmuch as there is limited sewer capacity available and that drought conditions exist in California:

A. That water saving devices such as low-flow shower heads and faucets and low-flush toilets shall be installed in all residences and common facilities such as the clubhouse.

18.16.080 Noise. In order to provide adequate protection from noise sources, the following standard shall be met for all residential structures:

A. That any residence constructed on the site shall be designed in such a manner that the ambient noise level within the structure shall meet a Sound Transmission Class (STC) of 50 (45 if field tested and verified by a registered Noise Engineer to the satisfaction of the City Engineer);

B. That in the event the studies undertaken by the City's Noise Consultant in preparing the Noise Element of the General Plan it is determined that additional sound attenuation is necessary, the developer shall comply with any appropriate recommendations set forth in the Draft Noise Element.

18-16 • JAN 4, 1994

BIOLOGICAL AND WATER QUALITY PROTECTION FEATURES OF PACIFIC RIDGE AT HALF MOON BAY

Summary of Overall Project

The Pacific Ridge at Half Moon Bay Project involves the construction of 145 single-family homes on approximately 114 acres of land located within the City of Half Moon Bay. The residential areas will be clustered into distinct neighborhoods separated by an integrated system of open space. The open space will be used to preserve significant natural environmental features, such as wetlands, riparian corridors, pond and hillsides, as well as provide for movement corridors for wildlife between environmentally sensitive habitats on the site and adjacent properties to the north and east of the Project. The open space areas include the hillside above the 160 foot contour, the existing agricultural pond, all of the wetlands and their 100 foot buffer zones, and the existing riparian corridors and their 30 foot buffer zones. The Site Plan, dated January 24, 2000, submitted to the Coastal Commission provides the latest depiction of the Project. It is attached hereto.

Storm Water Drainage and Water Quality Management

The Project site is part of the Terrace Avenue Assessment District, which was formed in the early 1980s to construct public storm drainage facilities in this area. These existing facilities consist of 36-inch and 48-inch drop inlets and reinforced concrete drainage pipes located in the flow lines of Drainages 2 and 3 (the middle two drainages), respectively, at the western edge of the Pacific Ridge property. Drainage 1 also enters a catchment basin into the local storm drain system at the western edge of the property. The Project drainage plan is designed to direct runoff into the existing drainages and underground pipes, which include the Terrace Avenue Assessment District storm drainage facilities. Runoff will be diverted into the existing system facilities through underground pipes and surface flow.

Ailanto Properties will prepare a Stormwater Pollution Prevention Plan ("SWPPP") as required by the Regional Water Quality Control Board. An integral part of the SWPPP is erosion control associated with construction activities. The SWPPP also addresses post-construction stormwater control and water quality management. The SWPPP will implement the standard required features such as:

- drop inlet signs (e.g., No Dumping, Flows to Bay or similar theme) (implements CDP condition 61);
- traps in the drop inlet structures to capture sediment (implements CDP condition 12); and
- educational materials for the home buyers. The planned gazebo overlooking the lake will also contain information about the local ecosystem and the need to protect water quality.

EXHIBIT A

Ailanto will also incorporate, where practicable, other design features to provide for passive treatment of stormwater and urban runoff and to increase infiltration of runoff. Many of these concepts are described in more detail in *Start at the Source*, the Bay Area Stormwater Management Agencies Association (BASMAA 1998) design guidebook for water quality treatment measures. Many of these design concepts were also included in the original plan approved by the City and in the Section 401 waiver for the Project from the Regional Water Quality Control Board.

Post-construction water quality management objectives for the Project are to the maximum extent practicable:

- reduce directly connected impervious surface areas (roads, driveways, and houses);
- provide for passive treatments to filter pollutants and sediment from stormwater and urban runoff prior to discharge into the storm drainage system;
- increase runoff infiltration; and
- minimize long term operation and maintenance requirements.

The Project layout and topography provides opportunities for passive treatments of stormwater from small, sub-watersheds that will increase infiltration into the soil and trap or filter sediments and other pollutants prior to discharge into the storm drain system, local creeks, or the pond. While detailed engineering and grading studies have not been completed, design features to be included in the final plan design include:

- using cobble/gravel around drop inlet structures where practicable; and
- directing runoff into biofilters such as grassy/landscaped swales and vegetated filter strips.

The cobble/gravel filter breaks can be placed around many drop inlets and would be particularly useful in areas where the topography or lot layout is not conducive to placing grassy swales, such as in the center or edges of low gradient slope cul-de-sacs and double-loaded streets. The cobble/gravel filter breaks provide filtering of sediments and some infiltration prior to entering the storm drain.

Grassy swales are designed to transport shallow depths of runoff slowly over vegetation. Biofilters such as grassy swales provide effective treatments for small or initial storm events where the pollutant loads tend to be most concentrated. The movement of the runoff through the vegetation provide an opportunity for sediments and particulates to be filtered and degraded and to increase stormwater infiltration, which further removes pollutants and runoff volume (BASMAA 1998).

Grassy swales are generally suitable in areas where slopes or gradients are fairly gentle. On the site, two main areas provide opportunities for constructing grassy swales to treat road runoff. The area along Foothill Boulevard on the western edge of the site includes a landscape zone along the eastern side of the roadway. This zone will be designed to provide a broad grassy swale. The road will be sloped to direct runoff to the eastern side of the road and openings will be provided in the curb at approximately 100 foot intervals that will allow the water to enter the swale. At periodic points, probably on the order of every couple hundred feet, treated flow would be picked-up into drop inlets and into the storm drain system.

Portions of the loop road around the pond also provides an excellent opportunity to incorporate a similar treatment swale. The attached drawing shows how the swale would be incorporated into the road and trail design. The street would also be sloped to direct water into the swale through periodic openings in the street curb. Rather than picking up all of this flow into the storm drain, runoff would be periodically directed to flow out of the swale through a series of closely spaced, small, 6 to 8" diameter pipes or culverts under the trail. This water would then would sheet flow across the buffer and into the wetlands and pond.

The buffer would act as an additional filter strip for the runoff, providing additional cleaning of the runoff. This approach has the further benefit of providing additional surface drainage to the seasonal Wetlands C and D to offset the reduced watershed for these wetlands.

Vegetated filter strips provide similar functions to grassy swales. Filter strips are basically vegetated zones where runoff is allow to sheet flow before entering adjacent waterways or storm drains. Lots adjacent to the site drainages and up slope of other open space areas provide the opportunity to shift lot grading to direct runoff through the vegetated buffer zones along the creeks and away from the streets (typical developments slope lots to drain to the streets and directly into a storm drain system). The vegetated buffer zones will serve as filter strips, providing additional area for infiltration and capture of sediments and particulates. Some minor locations may also be suitable for filtering some road runoff as well.

Implementation of the above measures will result in the treatment of a substantial amount of runoff prior to entering the underground storm drain system. These measures should significantly improve water quality and reduce discharge volumes from the site. Specific locations of the water quality treatment facilities will be completed as part of the final grading and design once the Project site plan has been finalized. The Homeowners Association will be responsible for the maintenance of these facilities. The passive water treatment features will minimize the operation and maintenance requirements.

Open Space and Habitat

Open space areas on the property include hillside land above the 160 foot contour, the existing agricultural pond and the 100 foot buffer zone around the pond, all wetlands and their surrounding 100 foot buffer zones, and the five drainages and their 30 foot wide buffer

zones. The primary existing habitat feature on the property is the agricultural pond in the northern portion of the property. The open space features of the Project create a large habitat area around this agricultural pond and provide broad, open corridors to the east, north, and northwest which will allow for animal movement between the onsite pond and wetlands and offsite ponds and undeveloped lands.

No uses are proposed in wetlands. In wetland buffers, three permitted uses are proposed. First, as the Coastal Commission staff recommended, a bridge in the form of an oversized arched culvert will be placed within the shared buffer for Wetlands E and I along Drainage 3. Second, a network of trails will be constructed within and along the perimeter of wetland buffer zones. Third, upon its occurrence, the extension of Bayview Drive onto the Project site will encroach slightly into the buffer zone for Wetland F. As fully explained in a letter to Steve Scholl from Steve Cassidy, dated October 28, 1999,[1] each of these uses is permitted and will meet the development standards and required findings set forth in Zoning Ordinance section 18.38.080(G), 18.38.075(G) and 18.38.080(H).

There are no uses proposed in riparian corridors and their buffer zones other than bridges and trail crossings. As explained in the October 28, 1999 letter to Steve Scholl from Steve Cassidy, each of these uses is permitted and meets the development standards and findings required for development set forth in Zoning Ordinance sections 18.38.075(C), (G) and (H). For example, the proposed uses in riparian corridors and buffer zones have been designed to:

- Minimize vegetation loss through siting of features to utilize existing openings in the vegetation along the channels or is limited to exotic eucalyptus trees;
- Use bridges or arch culverts to span channels and retain the natural creek beds for animal passage and to not restrict stream flows;
- Divert untreated runoff from roads and other developed areas away from existing wetlands and creeks; and
- Revegetate all disturbed soils with appropriate seed mix as identified in the SWPPP to be developed for the Project in compliance with Regional Water Quality Control Board regulations.

---

[1] For the most part, the explanation of the Project's consistency with the LCP set forth in the October 28, 1999 letter still pertains since the current Project proposal remains similar to the October proposal. The few differences in the Project between now and then are explained in a letter to Jack Liebster from Bob Henry, dated January 26, 2000. Notably, the Project has been changed to move the loop road away from the pond dam, thus avoiding encroachments onto any wetland buffer zone for the pond. In addition, there is no longer an emergency vehicle access road near Grandview Boulevard, thereby avoiding encroaching onto the wetland buffer zone for Wetland A. Thus, the October 28, 1999 letter remains pertinent, except where it discusses the loop road and the emergency vehicle access road. We note also that the October 28, 1999 letter does not completely and accurately describe the proposed grading and drainage plans. For a complete description of grading, please refer to the letter to Jack Liebster from Bob Henry dated January 13, 2000. Drainage issues are described above.

As explained in the October 28, 1999 letter to Steve Scholl from Steve Cassidy, the drainages are the only ESHAs on the property, and only resource-dependent and other uses which will not have a significant adverse impact will be permitted.

The Project includes an extensive program for enhancement and management of the pond and other wetlands to enhance habitat values and provide substantial environmental benefit. These measure include:

- draining the pond to control bullfrogs and fish;
- planting of coastal scrub species in the upland buffers surrounding the pond;
- planting of additional willows along the retained portions of streams and the pond; and
- installation of a control structure on the outlet channel to re-establish the normal high water level in the pond and to allow normal stream flows (generally up to the 2 year storm) to remain in the channel. Larger storm events/flow above the normal conditions would be captured in the overflow storm drain at the lake.

The major objective of the pond enhancement and management measures is to create conditions that favor establishment of habitat for the California red-legged frog and possibly the San Francisco garter snake at the pond. The introduced bullfrog and fish that currently inhabit the pond are significant predators and competitors with these two rare native species and preclude the establishment of red-legged frog population at the pond. The planting of additional willows around the pond and coastal scrub vegetation in 100-foot wide upland buffer zones around the pond and adjacent wetlands will provide additional habitat favored by both species in proximity to the pond.

The outlet channel for the pond was constructed in 1983 for the purpose of lowering the water levels in the pond. No formal control structure or measures to prevent the channel from eroding further into the pond appear to have been implemented. Currently, a large headcut is forming and the upper end of the channel is advancing into the pond. This headcut has caused the pond water levels to decline over the last couple of years and will likely continue to cut further into the pond in the future.

The Project will construct a slotted weir that would allow a controlled amount of flow to remain in the channel in order to maintain the riparian and wetland (Wetland A) habitats which have formed along the man-made channel. The weir will also stabilize the channel and restore the normal water levels in the pond. A second overflow storm drain intake would be installed in the southwestern corner of the pond. This intake will capture extreme flows and divert the high flows into the storm drain system (see Storm Water Drainage and Water Quality discussion above). This second control structure would also be equipped with a drain release for safety purposes that would allow draining of the pond in case of imminent dam

failure. This release will also facilitate periodic draining of the pond to aid in control of bullfrogs and fish should they become established in the pond following the initial control efforts.

The primary water source for the existing pond is water diverted across a drainage divide from the Drainage 3 watershed. A diversion was initially constructed when the pond was first built in 1954 and the current rancher lessee has continued the diversion in a less formal fashion through a small ditch in order to keep the pond filled. This cross-watershed diversion is what has created Wetland E.

As suggested by Coastal Commission staff, the Project will construct an appropriately sized channel that would divert most of the normal stream flow from Drainage 3 in the Wetland E swale and into the pond. The channel would also be designed to allow some high flows to continue downstream into the lower segments of the channel before it enters the existing storm drainage system at the western edge of the property. The new channel will be planted with a minimum of 100 willows to form a continuous riparian corridor down to the pond and compensate for the estimated 2 to 3 willows and 18 to 20 eucalyptus trees which may be removed for the road crossing of the channels (implements and exceeds CDP condition 38, which required a 3:1 replacement).

Ailanto Properties will prepare and submit a final re-vegetation and habitat enhancement plan and open space management plan to the U.S. Fish and Wildlife Service, California Department of Fish and Game and California Coastal Commission for review before the initiation of construction. The plan will include an appropriate monitoring program to assure that plantings and other habitat enhancement measures are successful. The re-vegetation and enhancement plan will be implemented by and will be the responsibility of Ailanto Properties for the habitat establishment and monitoring phase. The management plan will provide the operational requirements for the long-term management of the open space lands. Funding for the hiring of the long-term management entity will be through the home owners assessment fees (implements and expands CDP condition 53).

In order to protect wetlands, streams and riparian habitats, water quality, and threatened and endangered species during construction activities on the site, Ailanto Properties will fence off wetlands and riparian corridors in order to minimize disturbance of these areas during construction.

In order to minimize potential mortality or harassment to California red-legged frogs and San Francisco garter snake during construction, Ailanto Properties will implement the following measures[2] as part of the Project:

---

[2] These measures are from the Wetlands Mitigation and Monitoring Plan, dated December 1997, and the Section 404 permit conditions imposed by the U.S. Army Corps of Engineers, which ultimately became part of the City of Half Moon Bay's CDP Conditions of Approval.

- Pre-construction surveys for both California red-legged frogs and San Francisco garter snakes in and around stream crossings and adjacent to the existing stock pond shall be conducted within two months prior to the initiation of Project construction.

- The pre-construction surveys in and around stream crossings and the existing stock pond shall be conducted by a qualified biologist with a valid scientific take permit for capturing and handling California red-legged frogs and San Francisco garter snakes and any California red-legged frogs and San Francisco garter snakes found within the Project impact area shall be captured and relocated by a qualified biologist to appropriate habitat in the existing stock pond.

- A biological monitor shall brief the construction crew on the potential presence of California red-legged frogs and San Francisco garter snakes in the Project area, and educate on-site workers in the identification and habitat requirements of California red-legged frogs and San Francisco garter snakes, and the ramifications of direct take of these species.

- A biological monitor shall be on call throughout the entire construction process to ensure that no California red-legged frogs or San Francisco garter snakes will be harassed by the construction of the housing development. The biological monitor shall have the authority to shut down the construction operation if either California red-legged frogs or San Francisco garter snakes are observed within the construction area.

In order to minimize potential long term mortality and harassment to California red-legged frog and San Francisco garter snake, Ailanto Properties will implement the following measures[1] for long-term habitat protection and management of the pond and wetland habitats:

- The CC&Rs shall require the Homeowners Association to manage and protect the Project site's open space as sensitive areas.

- The proposed path associated with the existing stock pond shall be fenced off and access to the pond shall only be provided to emergency vehicles and individuals maintaining the pond. The path shall not be paved and shall be located along the north and west side of the pond to facilitate maintenance of the pond.

- An annual monitoring report shall be submitted by Ailanto Properties to both the Corps and the Service outlining the status and success of the minimization measures. The report shall include: vegetation abundance and diversity, presence and number of California red-legged frogs and San Francisco garter snakes observed, and determination of breeding. In addition, the report shall include the number of

---

[1] Again, these measure are from the Wetlands Mitigation and Monitoring Plan, dated December 1997, and the Section 404 permit. See, footnote 2, supra.

bullfrogs detected and eradicated from the existing stock pond. The report will be submitted annually for ten years.

- Oversized arch culverts with dirt bottoms will be constructed under the four street crossings through the open space corridors leading to and from the pond (northwest - pond and Wetland A, north - pond and Wetland B, east - Drainage 4, and southeast - the Drainage 3 crossing). Wing walls will also be constructed along the curbs to direct small animals to the culverts and minimize animals from crossing over the roadway. The final design and locations of the wing walls and culverts will be determined in consultation with the U.S. Fish and Wildlife Service and California Department of Fish and Game.

Pacific Ridge
at
Half Moon Bay

Site Plan

145 LOTS

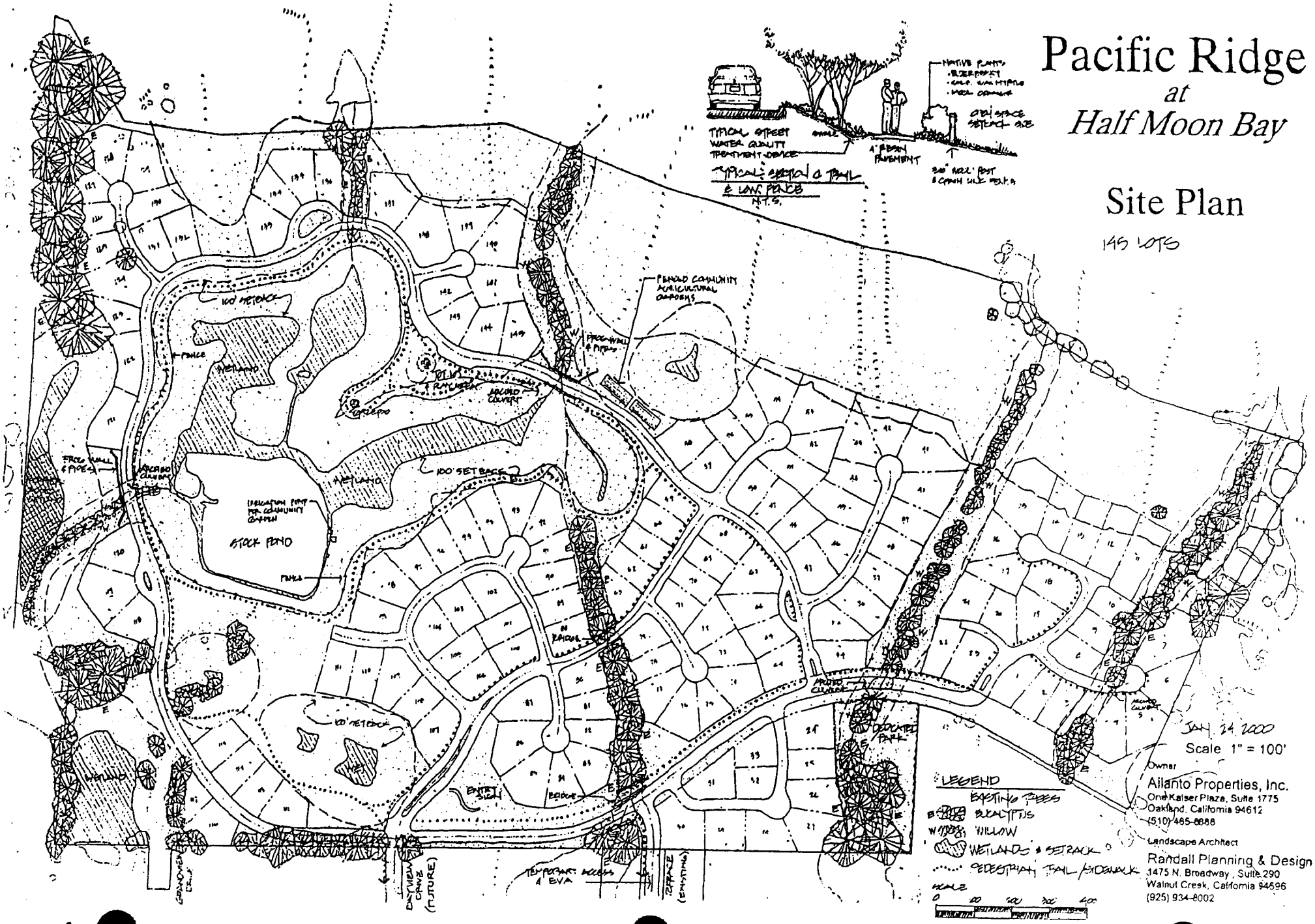

COASTAL DEVELOPMENT PERMIT- PDP 11-98
APPLICABLE CONDITIONS OF APPROVAL

1. The project shall be constructed in substantial compliance with the revised project layout dated January 24, 2000, and submitted to the Coastal Commission on January 26, 2000.

   [*This condition has been modified to reflect the current Project layout.*]

2. All design changes are in substantial conformance with the approved Vesting Tentative Map without amendments, and the applicant's vested rights will be fully preserved by development under this approval.

COASTAL RESOURCES CONSERVATION STANDARDS

3. For perennial streams on the property, riparian buffer zones shall be established within 50 feet from the limit of riparian vegetation, or where no riparian vegetation exists, within 50 feet from the bank edge.

4. For intermittent streams on the property, riparian buffer zones shall be established within 30 feet from the limit of riparian vegetation, or where no riparian vegetation exists, within 30 feet from the midpoint of the stream.

5. [*In response to Coastal Commission staff's concerns regarding fencing of riparian corridors, Ailanto no longer intends to implement this condition.*]

6. A buffer zone shall be established within 100 feet of the high water mark of the existing pond on the property.

7. No portion of any residential parcel shall be permitted within any established buffer zone on the property.

8. In those instances where a home is proposed on a lot adjacent to a riparian buffer zone on the property, and the home can not be moved any farther away from the edge of the established buffer zone without encroaching on the minimum required front yard setback, rear yards setbacks may be reduced to a minimum of 10 feet.

9. The Applicant shall install a vegetative fence (such as a hedgerow) along the northern, eastern and southern boundaries of the property to discourage children and small animals from crossing property lines.

10. The Applicant shall incorporate language within the CC&R's to limit the nuisance liability of adjacent property owners who engage in agricultural uses.

11. The Applicant shall install a bridge over the intermittent stream located where Foothill Boulevard is to cross over Drainage #3 near Terrace Avenue.

EXHIBIT B

12. The Applicant shall install silt traps on the property as part of the on-site storm drain system. The homeowners shall be responsible to pay for the on-going maintenance of that portion of the storm drain system necessary for the City to achieve compliance with its NPDES permit. The homeowners may fund this on-going maintenance either through the Homeowner's Association as required by the CC&R's, or through an assessment district.

13. Prior to the start of construction, the Applicant shall conduct a survey to identify any raptor nesting sites on the property or to confirm the absence of such nesting sites. If raptor nesting sites are identified during the survey, specific setback distances shall be established by a qualified biologist, in consultation with the California Department of Fish and Game, based on the species of raptor occupying the nest. The Applicant shall do no work within the established setback distances of any occupied nests during breeding season, and no construction within the established setback shall take place until after all birds in the identified nest have fledged. The Applicant shall conform to Section 3503.5 of the California Fish and Game Code and all relevant provisions of the Migratory Bird Treaty Act as it pertains to raptors.

VISUAL RESOURCE PROTECTION AND DESIGN STANDARDS

14. The Applicant shall provide a landscaping plan for approval by the Architectural Review Committee that, when implemented, shall effectively screen the project liberally with trees along the western boundary line, and that shall also incorporate additional landscaping as screening for all homes adjacent to the 160-foot contour.

15. All streets on the property shall be illuminated through the use of indirect street lighting.

16. All structures on the property shall utilize muted paint colors and muted roof shingle tones, as previously approved by the Architectural Review Committee.

PROJECT ACCESS

17. The Applicant shall phase the Project as follows:

    a. Phase 1: During construction of the Project, construction traffic vehicles shall access the Project site via Terrace Avenue and the Applicant shall implement Conditions Nos. 84 to 88 set forth below. The Applicant shall also install speed bumps on Terrace Avenue to reduce vehicle speeds.

    b. Phase 2: Concurrently with Project construction, the Applicant shall design, obtain permit(s) for, fund and construct the widening of Highway 1 for a distance of 400 feet on each side of the intersection of Highway 1 and Terrace Avenue to accommodate additional lanes on Highway 1.

c. Phase 3: Occupancy shall not occur until the Phase 2 improvements have been completed. Project access shall be through Terrace Avenue. The Applicant shall install a traffic light at the intersection of Terrace Avenue and Highway 1 as soon as the Department of Transportation (Caltrans) determines signal warrants have been met.

d. Phase 4: When another access route becomes available, the Applicant shall remove the traffic light at the intersection of Terrace Avenue and Highway 1 and construct knock-down barriers at the Terrace Avenue/Pacific Ridge property line in order to convert Terrace Avenue into an emergency vehicle access route to the Project site.

e. Phase 4B: To mitigate for cumulative weekend traffic impacts at Highway 1 and Main Street, the Applicant shall contribute its fair share of the Highway 1 improvements between Terrace Avenue and Main Street once occupancy reaches 126 units.

[*This condition has been revised to require Ailanto to implement a project phasing plan.*]

18. The Applicant shall construct Foothill Boulevard on-site as shown on the Vesting Tentative Map, except that there will be two drive lanes and a bike lane in-lieu of four drive lanes. The on-site portion of Foothill Boulevard shall terminate at the proposed Bayview Drive at the north and at Brightwater Road at the south. The Applicant shall dedicate an easement to the City of Half Moon Bay from Brightwater Road to the southern property boundary so that the City could implement the remainder of Foothill Boulevard in the future in accordance with the LCP.

[*This condition has been revised to avoid the construction of portions of Foothill Boulevard on-site that would encroach onto the buffer zone for Wetland A on the northwest corner of the property.*]

WETLANDS AND RIPARIAN CORRIDORS

19. [*This condition has been deleted since the Wetland Mitigation and Monitoring Plan no longer applies to the Project.*]

20. Lot lines will not be permitted in the wetland and/or riparian buffer zone. The following restrictions apply:

21. The setback from riparian corridors shall be 50 feet from the bank edge for perennial streams and 30 feet from the midpoint of intermittent streams, or land on both sides of riparian corridors which extends 50 feet from the bank edge for perennial streams and 30 feet from the midpoint of intermittent streams where no riparian vegetation exists as defined in Section 18.38.075 D of the Zoning Ordinance.

22. The average setback from wetlands shall be 100 feet from the high point on lakes, ponds and marshes (although no buffer is required on manmade agricultural ponds and reservoirs, as defined in Section 18.38.080 D of the Zoning Ordinance). The pond is intended to be managed as a restored wetland area.

23. Disturbance or removal of vegetation shall not exceed the minimum necessary to complete operations. The disturbed portions of any stream channel or lake margin within the high water mark of the stream or lake shall be restored to as near their original condition as possible.

24. Restoration shall include the revegetation of stripped or exposed areas.

25. Installation of bridges, culverts, or other structures shall be such that water flow is not impaired and upstream or downstream passage of fish is assured at all times. Bottoms of temporary culverts shall be placed at or below stream channel grade. Bottoms of permanent culverts shall be placed below stream channel grade.

26. Plans for design of concrete sills and other features that could potentially impede fish migrations must be approved by Department of Fish and Game.

27. An adequate fish passage facility must be incorporated into any barrier that obstructs fish passage.

28. Equipment shall not be operated in the stream channels of flowing live streams except as may be necessary to construct crossings or barriers and fills at channel changes.

29. When work in a flowing stream is unavoidable, the entire stream flow shall be diverted around the work area by a barrier, temporary culvert, and/or a new channel capable of permitting upstream and downstream fish movement. Construction of the barrier and/or the new channel shall normally begin in the downstream area and continue in an upstream direction, and the flow shall be diverted only when construction of the diversion is completed. Channel bank or barrier construction shall be adequate to prevent seepage into or from the work area. Channel banks or barriers shall not be made of earth or other substances subject to erosion unless first enclosed by sheet piling, rock riprap, or other protective material. The enclosure and the supportive material shall be removed when the work is completed and the removal shall normally proceed from downstream in an upstream direction.

30. Equipment shall not be operated in the lake or its margins except during excavation and as may be necessary to construct barriers or fills. If work in the lake is unavoidable, a curtain enclosure to prevent siltation of the lake beyond the immediate working area shall be installed. The enclosure and any supportive material shall be removed when the work is completed. Wash water containing mud or silt from aggregate washing or other operations shall not be allowed to enter a lake or flowing stream.

31. If operations require moving of equipment across a flowing stream, such operations shall be conducted without substantially increasing stream turbidity. For repeated crossings, the operator shall install a bridge, culvert, or rock-fill crossing as specified in comments below.

32. Structures and associated materials not designed to withstand high seasonal flows shall be removed to areas above the high water mark before such flows occur.

33. No debris, soil, silt, sand, bark, slash, sawdust, rubbish, cement or concrete or washing thereof, oil or petroleum products or other organic or earthen material from any logging, construction, or associated activity of whatever nature shall be allowed to enter into or placed where it may be washed by rainfall or runoff into waters of the State. When operations are completed, any excess materials or debris shall be removed from the work area. No rubbish shall be deposited within 150 feet of the high water mark of any stream or lake.

34. The operator will notify the Department of Fish and Game of the date of commencement of operations and the date of completion of operations at least five days prior to such completion.

35. Prior to the commencement of any construction activities, the Applicant shall enter into a new Streambed Alteration Agreement with the Department of Fish and Game with respect to any changes proposed to streambed areas or the diversion or obstruction of natural stream flows. The Applicant shall comply with any and all conditions imposed by the Department of Fish and Game in connection with the Streambed Alteration Agreement.

[*Conditions Nos. 35 to 41 are no longer valid since the referenced Streambed Alteration Agreement has expired and must be renewed. The conditions have been replaced with a requirement that Ailanto enter into a new Streambed Alteration Agreement with the Department of Fish and Game prior to commencing construction activities and to comply with any conditions that the agency may impose.*]

36. [*Conditions Nos. 35 to 41 are no longer valid since the referenced Streambed Alteration Agreement has expired and must be renewed. See new Condition No. 35.]*

37. [*Conditions Nos. 35 to 41 are no longer valid since the referenced Streambed Alteration Agreement has expired and must be renewed. See new Condition No. 35.]*

38. [*Conditions Nos. 35 to 41 are no longer valid since the referenced Streambed Alteration Agreement has expired and must be renewed. See new Condition No. 35.]*

39. [*Conditions Nos. 35 to 41 are no longer valid since the referenced Streambed Alteration Agreement has expired and must be renewed. See new Condition No. 35.]*

40. [*Conditions Nos. 35 to 41 are no longer valid since the referenced Streambed Alteration Agreement has expired and must be renewed. See new Condition No. 35.*]

41. [*Conditions Nos. 35 to 41 are no longer valid since the referenced Streambed Alteration Agreement has expired and must be renewed. See new Condition No. 35.*]

42. [*Conditions Nos. 42 to 56 no longer apply since they are the Clean Water Act section 404 permit conditions that were imposed in connection with the proposal to fill wetlands. A Section 404 permit for the filling of wetlands is no longer required since no wetlands will be filled; however, Ailanto has incorporated most of these conditions as part of the Project to enhance habitat for the red-legged frog and the San Francisco garter snake.*]

43. [*Conditions Nos. 42 to 56 no longer apply since they are the Clean Water Act section 404 permit conditions that were imposed in connection with the proposal to fill wetlands. A Section 404 permit for the filling of wetlands is no longer required since no wetlands will be filled; however, Ailanto has incorporated most of these conditions as part of the Project to enhance habitat for the red-legged frog and the San Francisco garter snake.*]

44. [*Conditions Nos. 42 to 56 no longer apply since they are the Clean Water Act section 404 permit conditions that were imposed in connection with the proposal to fill wetlands. A Section 404 permit for the filling of wetlands is no longer required since no wetlands will be filled; however, Ailanto has incorporated most of these conditions as part of the Project to enhance habitat for the red-legged frog and the San Francisco garter snake.*]

45. [*Conditions Nos. 42 to 56 no longer apply since they are the Clean Water Act section 404 permit conditions that were imposed in connection with the proposal to fill wetlands. A Section 404 permit for the filling of wetlands is no longer required since no wetlands will be filled; however, Ailanto has incorporated most of these conditions as part of the Project to enhance habitat for the red-legged frog and the San Francisco garter snake.*]

46. [*Conditions Nos. 42 to 56 no longer apply since they are the Clean Water Act section 404 permit conditions that were imposed in connection with the proposal to fill wetlands. A Section 404 permit for the filling of wetlands is no longer required since no wetlands will be filled; however, Ailanto has incorporated most of these conditions as part of the Project to enhance habitat for the red-legged frog and the San Francisco garter snake.*]

47. [*Conditions Nos. 42 to 56 no longer apply since they are the Clean Water Act section 404 permit conditions that were imposed in connection with the proposal to fill wetlands. A Section 404 permit for the filling of wetlands is no longer required since no wetlands will be filled; however, Ailanto has incorporated most of these conditions as part of the Project to enhance habitat for the red-legged frog and the San Francisco garter snake.*]

48. [*Conditions Nos. 42 to 56 no longer apply since they are the Clean Water Act section 404 permit conditions that were imposed in connection with the proposal to fill wetlands. A Section 404 permit for the filling of wetlands is no longer required since no wetlands will*

be filled; however, Ailanto has incorporated most of these conditions as part of the Project to enhance habitat for the red-legged frog and the San Francisco garter snake.]

49. [*Conditions Nos. 42 to 56 no longer apply since they are the Clean Water Act section 404 permit conditions that were imposed in connection with the proposal to fill wetlands. A Section 404 permit for the filling of wetlands is no longer required since no wetlands will be filled; however, Ailanto has incorporated most of these conditions as part of the Project to enhance habitat for the red-legged frog and the San Francisco garter snake.*]

50. [*Conditions Nos. 42 to 56 no longer apply since they are the Clean Water Act section 404 permit conditions that were imposed in connection with the proposal to fill wetlands. A Section 404 permit for the filling of wetlands is no longer required since no wetlands will be filled; however, Ailanto has incorporated most of these conditions as part of the Project to enhance habitat for the red-legged frog and the San Francisco garter snake.*]

51. [*Conditions Nos. 42 to 56 no longer apply since they are the Clean Water Act section 404 permit conditions that were imposed in connection with the proposal to fill wetlands. A Section 404 permit for the filling of wetlands is no longer required since no wetlands will be filled; however, Ailanto has incorporated most of these conditions as part of the Project to enhance habitat for the red-legged frog and the San Francisco garter snake.*]

52. [*Conditions Nos. 42 to 56 no longer apply since they are the Clean Water Act section 404 permit conditions that were imposed in connection with the proposal to fill wetlands. A Section 404 permit for the filling of wetlands is no longer required since no wetlands will be filled; however, Ailanto has incorporated most of these conditions as part of the Project to enhance habitat for the red-legged frog and the San Francisco garter snake.*]

53. [*Conditions Nos. 42 to 56 no longer apply since they are the Clean Water Act section 404 permit conditions that were imposed in connection with the proposal to fill wetlands. A Section 404 permit for the filling of wetlands is no longer required since no wetlands will be filled; however, Ailanto has incorporated most of these conditions as part of the Project to enhance habitat for the red-legged frog and the San Francisco garter snake.*]

54. [*Conditions Nos. 42 to 56 no longer apply since they are the Clean Water Act section 404 permit conditions that were imposed in connection with the proposal to fill wetlands. A Section 404 permit for the filling of wetlands is no longer required since no wetlands will be filled; however, Ailanto has incorporated most of these conditions as part of the Project to enhance habitat for the red-legged frog and the San Francisco garter snake.*]

55. [*Conditions Nos. 42 to 56 no longer apply since they are the Clean Water Act section 404 permit conditions that were imposed in connection with the proposal to fill wetlands. A Section 404 permit for the filling of wetlands is no longer required since no wetlands will be filled; however, Ailanto has incorporated most of these conditions as part of the Project to enhance habitat for the red-legged frog and the San Francisco garter snake.*]

56. [*Conditions Nos. 42 to 56 no longer apply since they are the Clean Water Act section 404 permit conditions that were imposed in connection with the proposal to fill wetlands. A Section 404 permit for the filling of wetlands is no longer required since no wetlands will be filled; however, Ailanto has incorporated most of these conditions as part of the Project to enhance habitat for the red-legged frog and the San Francisco garter snake.*]

WATER QUALITY

57. As required for projects disturbing five (5) acres or more, the applicant shall submit a Storm Water Pollution Prevention Plan (SWPPP) for review by the City Engineer prior to the issuance of any grading permits. The SWPPP shall be implemented by the general contractor and all subcontractors and suppliers of material and equipment. Construction site cleanup and control of contraction debris shall also be addressed in the SWPPP. The developer is responsible for complying with the SWPPP. Failure to do so will result in the issuance of correction notices, citations or project stop work order.

58. The Storm Water Pollution Prevention Plan shall be prepared and implemented to the satisfaction of the Regional Water Quality Control Board.

59. The May 1990 Dykstra Ranch Pond Water Quality Management Plan shall be revised and implemented to the satisfaction of the San Francisco Regional Water Quality Control Board.

60. Prior to the commencement of any clearing, grading or excavation resulting in a land disturbance greater than five acres, the developer shall provide evidence that a Notice of Intent (NOI) has been sent to the California State Water Resources Control Board.

61. All storm drain inlets shall be labeled "No Dumping - Drains to Bay" using thermoplastic lettering or as approved by the Public Works Director/City Engineer.

62. Street grade along the face of curb shall have a minimum of 0.5%.

63. No drainage shall be directed over slopes.

64. All lots shall be graded so as not drain onto any other lot adjoining property prior to being deposited to an approved storm drainage system.

65. 12" minimum storm drain pipe shall be used.

SOIL ENGINEERING

66. Project construction shall conform to the recommendations in the February 1997 Soil Engineering Study by Earth System Consultants, of both the overall subdivision and the reservoir pond, which shall be reviewed and accepted to the satisfaction of the City Engineer.

67. The city shall retain a geotechnical firm, a the applicant's expense, to evaluate the potential for debris flow hazards to the Pacific Ridge site from the adjacent property (to the east) to the satisfaction of the City Engineer. If debris flow hazards are identified, the condition shall be corrected or mitigated to the satisfaction of the City Engineer.

68. Grading shall be done under the continuous inspection of the Soils Engineer and in compliance with the grading plans and recommendations of the Soils Engineer. Upon its completion, the Soils Engineer shall submit a declaration to the Director of Public Works/City Engineer that all work has been done in accordance with the recommendations contained in the soils report and the approved grading plans.

69. Any grading, stockpiling, storing of equipment or material on adjacent properties shall require written approval of those property owners affected. Copies of the rights-of-entry shall be furnished to the Director of Public Works/City Engineer.

70. No cut and fill slopes shall exceed 2:1 unless approved by the Director of Public Works/Engineer.

71. The project civil engineer shall certify that the finished graded building pads are within 0.1 feet in elevation of those shown on the approved grading plans.

OTHER CONDITIONS

72. All fire protection requirements of the Half Moon Bay Fire Protection District shall be met prior to the commencement of construction.

73. If historic or archeological resources are uncovered during grading activities, all work shall stop and the applicant shall retain a qualified archeologist. At the applicant's expense the qualified archeologist will perform an archeological reconnaissance and develop mitigation measures to protect archeological resources.

74. Pursuant to Chapter 14.40 of the Half Moon Bay Municipal Code, the hours of any construction operations shall be limited to 7:00 a.m. to 6:00 p.m. Monday through Friday, 8:00 a.m. to 6:00 p.m. Saturday, and 10:00 a.m. to 6:00 p.m. Sundays and Holidays.

GENERAL

75. Development of the Pacific Ridge subdivision shall conform to all standards and regulations in Zoning Ordinance section 18.16, the Dykstra Ranch PUD.

76. The Conditions of the Vesting Tentative Map approved in 1990, Final Subdivision Map submittal, grading, drainage, traffic circulation, and residential construction are hereby required with the exception of number 35 and the following modification to number 38:

Foothill Boulevard shall have 6 inch vertical curb and gutter, in lieu of rolled curb and gutter, and shall be crowned at the centerline with a minimum cross slope of two percent.

77. All structures shall be designed and constructed in compliance with the Uniform Building Code, the Half Moon Bay Municipal Code and the Half Moon Bay Standard Details.

78. Development shall be in substantial conformance with the approved project plans, including the site plan and building elevations, except for any changes that may be required by these conditions of approval. The Planning Director shall review and approve any deviation from the approved plans.

79. The Coastal Development Permit shall expire in accordance with the provisions of Zoning Ordinance section 18.20.080 which state as follows: A Coastal Development Permit shall expire on the latest date applicable to any other discretionary or ministerial permit or approval require for the development, including any extension granted for other permits or approvals. Should the development not require City permits or approvals other than a Coastal Development Permit, the Coastal Development Permit shall expire one year from its date of approval if the development has not begun during that time.

[*This condition has been revised to correctly state the provisions of Zoning Ordinance § 18.20.080.*]

80. The applicant shall revise the site plan to incorporate all mitigation measures that may be required by the U.S. Army Corps of Engineers, the California State Department of Fish and Game and the Conditions of this approval. These changes shall be incorporated into the Final Map for this project.

[*This condition has been revised to delete the reference to the Section 404 permit issued for the filling of wetlands since no wetlands will be filled.*]

81. The applicant shall plant the drainage corridors with willows and coastal scrub vegetation in the riparian corridors.

82. [*This condition has been deleted since no wetlands filling is proposed and thus there is no need for Ailanto to contribute money for off-site wetlands mitigation.*]

83. The applicant shall conduct a survey of the project site to determine the presence of agricultural fuel tanks. If they are located on the site, the applicant shall remove them in accordance with applicable state and federal standards, and submit verification of compliance to the Planning Director.

84. The applicant shall obtain a grading permit to provide parking for all construction workers on site prior to the commencement of grading or construction anywhere else on the site.

85. The applicant shall contact the Police Department 24 hours in advance, if 25 or more workers are to exit Terrace Avenue during the P.M. peek hour to allow the Police Department to provide some form of traffic control at the intersection of Terrace Avenue and Highway 1 if they deem necessary. The applicant shall reimburse the City for any costs related to such traffic control during the construction period.

86. The applicant shall make a best effort to recycle construction materials that are not utilized on the project site.

87. The applicant shall maintain Terrace Avenue free and clear of dirt and debris during the period that construction activities access the site from Terrace Avenue. This maintenance shall be done to the satisfaction of the City Engineer.

88. The applicant shall insure that heavy construction vehicles are placed on the project site from Terrace Avenue during non-peak commute hours. The applicant shall provide the Police Department 24 hours in advance of such activity.

COASTAL DEVELOPMENT PERMIT- PDP 11-98
APPLICABLE CONDITIONS OF APPROVAL

1. ~~The project shall be constructed in substantial compliance with the Coastal Development Permit, the application for which is entitled "Proposed Site Plan Modifications for Pacific Ridge at Half Moon Bay" as shown on the schematic plan prepared by EDI Architecture, Inc. San Francisco dated November 12, 1998, revised March 5 and 9, 1999 consisting of one sheet, and labeled Exhibit "A", incorporated herein and by reference made a part hereof, and on file in the office of the City of Half Moon Bay Planning Department, which site plan, which site plan has been modified to reflect the conditions set forth herein~~ **The project shall be constructed in substantial compliance with the revised project layout dated January 24, 2000, and submitted to the Coastal Commission on January 26, 2000.**

   [This condition has been modified to reflect the current Project layout.]

2. All design changes are in substantial conformance with the approved Vesting Tentative Map without amendments, and the applicant's vested rights will be fully preserved by development under this approval.

COASTAL RESOURCES CONSERVATION STANDARDS

3. For perennial streams on the property, riparian buffer zones shall be established within 50 feet from the limit of riparian vegetation, or where no riparian vegetation exists, within 50 feet from the bank edge.

4. For intermittent streams on the property, riparian buffer zones shall be established within 30 feet from the limit of riparian vegetation, or where no riparian vegetation exists, within 30 feet from the midpoint of the stream.

5. ~~A fence not to exceed 42 inches in height shall be installed at the outer edges of all riparian buffer zones on the property at the parcel line to protect riparian corridors.~~ ***[In response to Coastal Commission staff's concerns regarding fencing of riparian corridors, Ailanto no longer intends to implement this condition.]***

6. A buffer zone shall be established within 100 feet of the high water mark of the existing pond on the property.

7. No portion of any residential parcel shall be permitted within any established buffer zone on the property.

8. In those instances where a home is proposed on a lot adjacent to a riparian buffer zone on the property, and the home can not be moved any farther away from the edge of the established buffer zone without encroaching on the minimum required front yard setback, rear yards setbacks may be reduced to a minimum of 10 feet.

EXHIBIT C

9. The Applicant shall install a vegetative fence (such as a hedgerow) along the northern, eastern and southern boundaries of the property to discourage children and small animals from crossing property lines.

10. The Applicant shall incorporate language within the CC&R's to limit the nuisance liability of adjacent property owners who engage in agricultural uses.

11. The Applicant shall install a bridge over the intermittent stream located where Foothill Boulevard is to cross over Drainage #3 near Terrace Avenue.

12. The Applicant shall install silt traps on the property as part of the on-site storm drain system. The homeowners shall be responsible to pay for the on-going maintenance of that portion of the storm drain system necessary for the City to achieve compliance with its NPDES permit. The homeowners may fund this on-going maintenance either through the Homeowner's Association as required by the CC&R's, or through an assessment district.

13. Prior to the start of construction, the Applicant shall conduct a survey to identify any raptor nesting sites on the property or to confirm the absence of such nesting sites. If raptor nesting sites are identified during the survey, specific setback distances shall be established by a qualified biologist, in consultation with the California Department of Fish and Game, based on the species of raptor occupying the nest. The Applicant shall do no work within the established setback distances of any occupied nests during breeding season, and no construction within the established setback shall take place until after all birds in the identified nest have fledged. The Applicant shall conform to Section 3503.5 of the California Fish and Game Code and all relevant provisions of the Migratory Bird Treaty Act as it pertains to raptors.

VISUAL RESOURCE PROTECTION AND DESIGN STANDARDS

14. The Applicant shall provide a landscaping plan for approval by the Architectural Review Committee that, when implemented, shall effectively screen the project liberally with trees along the western boundary line, and that shall also incorporate additional landscaping as screening for all homes adjacent to the 160-foot contour.

15. All streets on the property shall be illuminated through the use of indirect street lighting.

16. All structures on the property shall utilize muted paint colors and muted roof shingle tones, as previously approved by the Architectural Review Committee.

PROJECT ACCESS

17. ~~Until such time as other permanent access is available, temporary access shall be provided to the site via Terrace Avenue. Within nine months of the approval of the Coastal Development Permit, the City shall determine the permanent primary access to~~

~~the site, consistent with the Vesting Tentative Map. Upon selection of the permanent primary access, the Applicant shall be responsible to pay all costs related to providing permanent primary access to the site. However, if other properties should benefit from this permanent primary access, then they shall pay for their "fair share" of benefit.~~
The Applicant shall phase the Project as follows:

a. Phase 1: During construction of the Project, construction traffic vehicles shall access the Project site via Terrace Avenue and the Applicant shall implement Conditions Nos. 84 to 88 set forth below. The Applicant shall also install speed bumps on Terrace Avenue to reduce vehicle speeds.

b. Phase 2: Concurrently with Project construction, the Applicant shall design, obtain permit(s) for, fund and construct the widening of Highway 1 for a distance of 400 feet on each side of the intersection of Highway 1 and Terrace Avenue to accommodate additional lanes on Highway 1.

c. Phase 3: Occupancy shall not occur until the Phase 2 improvements have been completed. Project access shall be through Terrace Avenue. The Applicant shall install a traffic light at the intersection of Terrace Avenue and Highway 1 as soon as the Department of Transportation (Caltrans) determines signal warrants have been met.

d. Phase 4: When another access route becomes available, the Applicant shall remove the traffic light at the intersection of Terrace Avenue and Highway 1 and construct knock-down barriers at the Terrace Avenue/Pacific Ridge property line in order to convert Terrace Avenue into an emergency vehicle access route to the Project site.

e. Phase 4B: To mitigate for cumulative weekend traffic impacts at Highway 1 and Main Street, the Applicant shall contribute its fair share of the Highway 1 improvements between Terrace Avenue and Main Street once occupancy reaches 126 units.

[This condition has been revised to require Ailanto to implement a project phasing plan.]

18. The Applicant shall construct Foothill Boulevard **on-site** as shown on the Vesting Tentative Map, except that there will be two drive lanes and a bike lane in-lieu of four drive lanes. The on-site portion of Foothill Boulevard shall terminate at ~~Grandview Boulevard~~ **the proposed Bayview Drive** at the north and at Brightwater Road at the south. The Applicant shall dedicate ~~easements from the points of termination to the property boundaries.~~ **an easement to the City of Half Moon Bay from Brightwater Road to the southern property boundary so that the City could implement the remainder of Foothill Boulevard in the future in accordance with the LCP.**

~~WETLANDS AND HABITAT RESTORATION~~

[This condition has been revised to avoid the construction of portions of Foothill Boulevard on-site that would encroach onto the buffer zone for Wetland A on the northwest corner of the property.]

WETLANDS AND RIPARIAN CORRIDORS

19. ~~The December 1997 Wetland Mitigation and Monitoring Plan shall be revised to incorporate conditions set forth in the Nationwide Permit 26 issued by the U.S. Army Corps of Engineers on December 15, 1998. The potential loss of wetlands and riparian habitat shall be mitigated to the satisfaction of the U.S. Army Corps of Engineers.~~ ***[This condition has been deleted since the Wetland Mitigation and Monitoring Plan no longer applies to the Project.]***

20. Lot lines will not be permitted in the wetland and/or riparian buffer zone. The following restrictions apply:

21. The setback from riparian corridors shall be 50 feet from the bank edge for perennial streams and 30 feet from the midpoint of intermittent streams, or land on both sides of riparian corridors which extends 50 feet from the bank edge for perennial streams and 30 feet from the midpoint of intermittent streams where no riparian vegetation exists as defined in Section 18.38.075 D of the Zoning Ordinance.

22. The average setback from wetlands shall be 100 feet from the high point on lakes, ponds and marshes (although no buffer is required on manmade agricultural ponds and reservoirs, as defined in Section 18.38.080 D of the Zoning Ordinance). The pond is intended to be managed as a restored wetland area.

23. Disturbance or removal of vegetation shall not exceed the minimum necessary to complete operations. The disturbed portions of any stream channel or lake margin within the high water mark of the stream or lake shall be restored to as near their original condition as possible.

24. Restoration shall include the revegetation of stripped or exposed areas.

25. Installation of bridges, culverts, or other structures shall be such that water flow is not impaired and upstream or downstream passage of fish is assured at all times. Bottoms of temporary culverts shall be placed at or below stream channel grade. Bottoms of permanent culverts shall be placed below stream channel grade.

26. Plans for design of concrete sills and other features that could potentially impede fish migrations must be approved by Department of Fish and Game.

27. An adequate fish passage facility must be incorporated into any barrier that obstructs fish passage.

28. Equipment shall not be operated in the stream channels of flowing live streams except as may be necessary to construct crossings or barriers and fills at channel changes.

29. When work in a flowing stream is unavoidable, the entire stream flow shall be diverted around the work area by a barrier, temporary culvert, and/or a new channel capable of permitting upstream and downstream fish movement. Construction of the barrier and/or the new channel shall normally begin in the downstream area and continue in an upstream direction, and the flow shall be diverted only when construction of the diversion is completed. Channel bank or barrier construction shall be adequate to prevent seepage into or from the work area. Channel banks or barriers shall not be made of earth or other substances subject to erosion unless first enclosed by sheet piling, rock riprap, or other protective material. The enclosure and the supportive material shall be removed when the work is completed and the removal shall normally proceed from downstream in an upstream direction.

30. Equipment shall not be operated in the lake or its margins except during excavation and as may be necessary to construct barriers or fills. If work in the lake is unavoidable, a curtain enclosure to prevent siltation of the lake beyond the immediate working area shall be installed. The enclosure and any supportive material shall be removed when the work is completed. Wash water containing mud or silt from aggregate washing or other operations shall not be allowed to enter a lake or flowing stream.

31. If operations require moving of equipment across a flowing stream, such operations shall be conducted without substantially increasing stream turbidity. For repeated crossings, the operator shall install a bridge, culvert, or rock-fill crossing as specified in comments below.

32. Structures and associated materials not designed to withstand high seasonal flows shall be removed to areas above the high water mark before such flows occur.

33. No debris, soil, silt, sand, bark, slash, sawdust, rubbish, cement or concrete or washing thereof, oil or petroleum products or other organic or earthen material from any logging, construction, or associated activity of whatever nature shall be allowed to enter into or placed where it may be washed by rainfall or runoff into waters of the State. When operations are completed, any excess materials or debris shall be removed from the work area. No rubbish shall be deposited within 150 feet of the high water mark of any stream or lake.

34. The operator will notify the Department of Fish and Game of the date of commencement of operations and the date of completion of operations at least five days prior to such completion.

35. ~~Under the terms of the Streambed Alteration Agreement, all work in or near the area covered shall be confined to the period April 15, 1998 through October 15, 1999.~~
Prior to the commencement of any construction activities, the Applicant shall enter into a new Streambed Alteration Agreement with the Department of Fish and Game with respect to any changes proposed to streambed areas or the diversion or obstruction of natural stream flows. The Applicant shall comply with any and all conditions imposed by the Department of Fish and Game in connection with the Streambed Alteration Agreement.

[Conditions Nos. 35 to 41 are no longer valid since the referenced Streambed Alteration Agreement has expired and must be renewed. The conditions have been replaced with a requirement that Ailanto enter into a new Streambed Alteration Agreement with the Department of Fish and Game prior to commencing construction activities and to comply with any conditions that the agency may impose.]

36. ~~The Agreement allows the operator to place roadways over drainage/creek areas as is outlined in the RMI report and letter to Mr. Robert Henry dated 01-30-98.~~
[Conditions Nos. 35 to 41 are no longer valid since the referenced Streambed Alteration Agreement has expired and must be renewed. See new Condition No. 35.]

37. ~~The operator agrees to follow recommendations as outlined in the RMI report which was presented to the Department of Fish and Game.~~
[Conditions Nos. 35 to 41 are no longer valid since the referenced Streambed Alteration Agreement has expired and must be renewed. See new Condition No. 35.]

38. ~~The operator agrees to tree replacement of 3:1 in various sites.~~
[Conditions Nos. 35 to 41 are no longer valid since the referenced Streambed Alteration Agreement has expired and must be renewed. See new Condition No. 35.]

39. ~~All animal relocation will be done after calling the Department of Fish and Game (707-944-5500).~~
[Conditions Nos. 35 to 41 are no longer valid since the referenced Streambed Alteration Agreement has expired and must be renewed. See new Condition No. 35.]

40. ~~The operator agrees to contact the Department of Fish and Game with results of the bull frog control program.~~
[Conditions Nos. 35 to 41 are no longer valid since the referenced Streambed Alteration Agreement has expired and must be renewed. See new Condition No. 35.]

41. ~~The Department of Fish and Game can modify or delay the project based on emergency conditions, which may greatly affect fish and wildlife resources.~~
[Conditions Nos. 35 to 41 are no longer valid since the referenced Streambed Alteration Agreement has expired and must be renewed. See new Condition No. 35.]

~~**SECTION 404 PERMIT CONDITIONS**~~

42. ~~To ensure compliance with the nationwide permit conditions required by the U.S. Army Corps of Engineers pertaining to endangered species, the following special conditions shall be implemented.~~
[Conditions Nos. 42 to 56 no longer apply since they are the Clean Water Act section 404 permit conditions that were imposed in connection with the proposal to fill wetlands. A Section 404 permit for the filling of wetlands is no longer required since no wetlands will be filled; however, Ailanto has incorporated most of these conditions as part of the Project to enhance habitat for the red-legged frog and the San Francisco garter snake.]

43. ~~To minimize the potential for mortality to California red-legged frogs, Ailanto Properties shall comply with the conditions 44-47.~~
[Conditions Nos. 42 to 56 no longer apply since they are the Clean Water Act section 404 permit conditions that were imposed in connection with the proposal to fill wetlands. A Section 404 permit for the filling of wetlands is no longer required since no wetlands will be filled; however, Ailanto has incorporated most of these conditions as part of the Project to enhance habitat for the red-legged frog and the San Francisco garter snake.]

44. ~~The filing of drainage channels and wetlands shall be confined to July 15 through October 31.~~
[Conditions Nos. 42 to 56 no longer apply since they are the Clean Water Act section 404 permit conditions that were imposed in connection with the proposal to fill wetlands. A Section 404 permit for the filling of wetlands is no longer required since no wetlands will be filled; however, Ailanto has incorporated most of these conditions as part of the Project to enhance habitat for the red-legged frog and the San Francisco garter snake.]

45. ~~Pre-construction surveys for both California red-legged frogs and San Francisco garter snakes in and around stream crossings and adjacent to the existing stock pond shall be conducted within two prior to the initiation of project construction.~~
[Conditions Nos. 42 to 56 no longer apply since they are the Clean Water Act section 404 permit conditions that were imposed in connection with the proposal to fill wetlands. A Section 404 permit for the filling of wetlands is no longer required since no wetlands will be filled; however, Ailanto has incorporated most of these conditions as part of the Project to enhance habitat for the red-legged frog and the San Francisco garter snake.]

46. ~~The pre-construction surveys in and around stream crossings the existing stock pond shall be conducted by a qualified biologist with a valid scientific take permit for capturing and handling California red-legged frogs and San Francisco garter snakes and any California red-legged frogs and San Francisco garter snakes found within the project impact area shall be captured and relocated by a qualified biologist to appropriate habitat in the existing stock pond.~~

[Conditions Nos. 42 to 56 no longer apply since they are the Clean Water Act section 404 permit conditions that were imposed in connection with the proposal to fill wetlands. A Section 404 permit for the filling of wetlands is no longer required since no wetlands will be filled; however, Ailanto has incorporated most of these conditions as part of the Project to enhance habitat for the red-legged frog and the San Francisco garter snake.]

47. ~~Direct mortality or injury to San Francisco garter snakes is not authorized with the accompanying incidental take statement.~~
[Conditions Nos. 42 to 56 no longer apply since they are the Clean Water Act section 404 permit conditions that were imposed in connection with the proposal to fill wetlands. A Section 404 permit for the filling of wetlands is no longer required since no wetlands will be filled; however, Ailanto has incorporated most of these conditions as part of the Project to enhance habitat for the red-legged frog and the San Francisco garter snake.]

48. ~~To minimize the likelihood of harassing California red-legged frogs and San Francisco garter snakes, Ailanto Properties shall comply with conditions 49 and 50.~~
[Conditions Nos. 42 to 56 no longer apply since they are the Clean Water Act section 404 permit conditions that were imposed in connection with the proposal to fill wetlands. A Section 404 permit for the filling of wetlands is no longer required since no wetlands will be filled; however, Ailanto has incorporated most of these conditions as part of the Project to enhance habitat for the red-legged frog and the San Francisco garter snake.]

49. ~~A biological monitor shall brief the construction crew on the potential presence of California red-legged frogs and San Francisco garter snakes in the project area, and educate on-site workers in the identification and habitat requirements of California red-legged frogs and San Francisco garter snakes, and the ramifications of direct take of these species.~~
[Conditions Nos. 42 to 56 no longer apply since they are the Clean Water Act section 404 permit conditions that were imposed in connection with the proposal to fill wetlands. A Section 404 permit for the filling of wetlands is no longer required since no wetlands will be filled; however, Ailanto has incorporated most of these conditions as part of the Project to enhance habitat for the red-legged frog and the San Francisco garter snake.]

50. ~~A biological monitor shall be on call throughout the entire construction process to ensure that no California red-legged frogs or San Francisco garter snakes will be harassed by the construction of the housing development. The biological monitor shall have the authority to shut down the construction operation if either California red-legged frogs or San Francisco garter snakes are observed within the construction area.~~
[Conditions Nos. 42 to 56 no longer apply since they are the Clean Water Act section 404 permit conditions that were imposed in connection with the proposal to fill wetlands. A Section 404 permit for the filling of wetlands is no longer required since

no wetlands will be filled; however, Ailanto has incorporated most of these conditions as part of the Project to enhance habitat for the red-legged frog and the San Francisco garter snake.]

51. ~~To minimize the impacts of habitat modification or loss to California red-legged frogs and San Francisco garter snakes, Ailanto Properties shall comply with conditions 52-56.~~ ***[Conditions Nos. 42 to 56 no longer apply since they are the Clean Water Act section 404 permit conditions that were imposed in connection with the proposal to fill wetlands. A Section 404 permit for the filling of wetlands is no longer required since no wetlands will be filled; however, Ailanto has incorporated most of these conditions as part of the Project to enhance habitat for the red-legged frog and the San Francisco garter snake.]***

52. ~~Ailanto Properties shall enter into an agreement to endow funds to an escrow account to the amount of $100,000 for the purposes of purchasing and enhancing a minimum of 5.4 acres of breeding, dispersal, and foraging habitat presently occupied adjacent to occupied California red-legged frogs and San Francisco garter snakes habitat within 15 miles of the project site. The amount of offsite lands to be acquired will be at a minimum 2:1 ratio of developed buffer habitat impacted within 150 feet of the stock pond (estimated to be 2.1 acres) and along drainage 3 and 4 (0.6 acres) for a total of 5.4 acres of required mitigation. Such an agreement shall be executed prior to the execution of grading within the Corps jurisdiction on the project site so that the Service can review to project to ensure that the conditions set forth in the Army Corp of Engineers' nationwide permit 26 are satisfied.~~
[Conditions Nos. 42 to 56 no longer apply since they are the Clean Water Act section 404 permit conditions that were imposed in connection with the proposal to fill wetlands. A Section 404 permit for the filling of wetlands is no longer required since no wetlands will be filled; however, Ailanto has incorporated most of these conditions as part of the Project to enhance habitat for the red-legged frog and the San Francisco garter snake.]

53. ~~Ailanto Properties shall provide the Corps and the U.S. Fish and Wildlife Service with a revised final mitigation plan and final map of the project site before the initiation of construction so that the Service can review the project to ensure that these condition are met.~~
[Conditions Nos. 42 to 56 no longer apply since they are the Clean Water Act section 404 permit conditions that were imposed in connection with the proposal to fill wetlands. A Section 404 permit for the filling of wetlands is no longer required since no wetlands will be filled; however, Ailanto has incorporated most of these conditions as part of the Project to enhance habitat for the red-legged frog and the San Francisco garter snake.]

54. ~~A conservation easement that is agreed upon by the U.S. Fish and Wildlife Service shall be established over the entire area designated as open space and environmentally~~

~~sensitive areas (ESAs), to permanently project habitat for California red-legged frogs and San Francisco garter snakes.~~
[Conditions Nos. 42 to 56 no longer apply since they are the Clean Water Act section 404 permit conditions that were imposed in connection with the proposal to fill wetlands. A Section 404 permit for the filling of wetlands is no longer required since no wetlands will be filled; however, Ailanto has incorporated most of these conditions as part of the Project to enhance habitat for the red-legged frog and the San Francisco garter snake.]

55. ~~The proposed path associated with the existing stock pond shall be fenced off and access to the pond shall only be provided to individuals maintaining the pond and emergency vehicles. The path shall not be paved and shall be located along the north and west side of the pond to facilitate maintenance of the pond.~~
[Conditions Nos. 42 to 56 no longer apply since they are the Clean Water Act section 404 permit conditions that were imposed in connection with the proposal to fill wetlands. A Section 404 permit for the filling of wetlands is no longer required since no wetlands will be filled; however, Ailanto has incorporated most of these conditions as part of the Project to enhance habitat for the red-legged frog and the San Francisco garter snake.]

56. ~~An annual monitoring report shall be submitted by Ailanto Properties to both the Corps and the Service outlining the status and success of the minimization measures. The report shall include: vegetation abundance and diversity, presence and number of California red-legged frogs and San Francisco garter snakes observed, and determination of breeding. In addition, the report shall include the number of bullfrogs detected and eradicated from the existing stock pond. The report will be submitted annually for ten years.~~
[Conditions Nos. 42 to 56 no longer apply since they are the Clean Water Act section 404 permit conditions that were imposed in connection with the proposal to fill wetlands. A Section 404 permit for the filling of wetlands is no longer required since no wetlands will be filled; however, Ailanto has incorporated most of these conditions as part of the Project to enhance habitat for the red-legged frog and the San Francisco garter snake.]

WATER QUALITY

57. As required for projects disturbing five (5) acres or more, the applicant shall submit a Storm Water Pollution Prevention Plan (SWPPP) for review by the City Engineer prior to the issuance of any grading permits. The SWPPP shall be implemented by the general contractor and all subcontractors and suppliers of material and equipment. Construction site cleanup and control of contraction debris shall also be addressed in the SWPPP. The developer is responsible for complying with the SWPPP. Failure to do so will result in the issuance of correction notices, citations or project stop work order.

58. The Storm Water Pollution Prevention Plan shall be prepared and implemented to the satisfaction of the Regional Water Quality Control Board.

59. The May 1990 Dykstra Ranch Pond Water Quality Management Plan shall be revised and implemented to the satisfaction of the San Francisco Regional Water Quality Control Board.

60. Prior to the commencement of any clearing, grading or excavation resulting in a land disturbance greater than five acres, the developer shall provide evidence that a Notice of Intent (NOI) has been sent to the California State Water Resources Control Board.

61. All storm drain inlets shall be labeled "No Dumping - Drains to Bay" using thermoplastic lettering or as approved by the Public Works Director/City Engineer.

62. Street grade along the face of curb shall have a minimum of 0.5%.

63. No drainage shall be directed over slopes.

64. All lots shall be graded so as not drain onto any other lot adjoining property prior to being deposited to an approved storm drainage system.

65. 12" minimum storm drain pipe shall be used.

SOIL ENGINEERING

66. Project construction shall conform to the recommendations in the February 1997 Soil Engineering Study by Earth System Consultants, of both the overall subdivision and the reservoir pond, which shall be reviewed and accepted to the satisfaction of the City Engineer.

67. The city shall retain a geotechnical firm, a the applicant's expense, to evaluate the potential for debris flow hazards to the Pacific Ridge site from the adjacent property (to the east) to the satisfaction of the City Engineer. If debris flow hazards are identified, the condition shall be corrected or mitigated to the satisfaction of the City Engineer.

68. Grading shall be done under the continuous inspection of the Soils Engineer and in compliance with the grading plans and recommendations of the Soils Engineer. Upon its completion, the Soils Engineer shall submit a declaration to the Director of Public Works/City Engineer that all work has been done in accordance with the recommendations contained in the soils report and the approved grading plans.

69. Any grading, stockpiling, storing of equipment or material on adjacent properties shall require written approval of those property owners affected. Copies of the rights-of-entry shall be furnished to the Director of Public Works/City Engineer.

70. No cut and fill slopes shall exceed 2:1 unless approved by the Director of Public Works/Engineer.

71. The project civil engineer shall certify that the finished graded building pads are within 0.1 feet in elevation of those shown on the approved grading plans.

OTHER CONDITIONS

72. All fire protection requirements of the Half Moon Bay Fire Protection District shall be met prior to the commencement of construction.

73. If historic or archeological resources are uncovered during grading activities, all work shall stop and the applicant shall retain a qualified archeologist. At the applicant's expense the qualified archeologist will perform an archeological reconnaissance and develop mitigation measures to protect archeological resources.

74. Pursuant to Chapter 14.40 of the Half Moon Bay Municipal Code, the hours of any construction operations shall be limited to 7:00 a.m. to 6:00 p.m. Monday through Friday, 8:00 a.m. to 6:00 p.m. Saturday, and 10:00 a.m. to 6:00 p.m. Sundays and Holidays.

GENERAL

75. Development of the Pacific Ridge subdivision shall conform to all standards and regulations in Zoning Ordinance section 18.16, the Dykstra Ranch PUD.

76. The Conditions of the Vesting Tentative Map approved in 1990, Final Subdivision Map submittal, grading, drainage, traffic circulation, and residential construction are hereby required with the exception of number 35 and the following modification to number 38: Foothill Boulevard shall have 6 inch vertical curb and gutter, in lieu of rolled curb and gutter, and shall be crowned at the centerline with a minimum cross slope of two percent.

77. All structures shall be designed and constructed in compliance with the Uniform Building Code, the Half Moon Bay Municipal Code and the Half Moon Bay Standard Details.

78. Development shall be in substantial conformance with the approved project plans, including the site plan and building elevations, except for any changes that may be required by these conditions of approval. The Planning Director shall review and approve any deviation from the approved plans.

79. The Coastal Development Permit ~~PDP-11-98~~ shall expire in accordance with the provisions of Zoning Ordinance section 18.20.080 which state as follows: A Coastal Development Permit shall expire on the latest date applicable to any other discretionary or ministerial permit or approval require for the development, including any extension granted for other permits or approvals. Should the development ~~nor~~ **not** require City permits or approvals other than a Coastal Development Permit, the Coastal Development

Permit shall expire one year from its date of approval if the development has not begun during that time ~~or one year from the day that the Coastal Commission appeal period ends, unless construction of the project has commenced.~~.

[This condition has been revised to correctly state the provisions of Zoning Ordinance § 18.20.080.]

80. The applicant shall revise the site plan to incorporate all mitigation measures **that may be** required by the U.S. Army Corps of Engineers ~~Section 404 Permit~~, the California State Department of Fish and Game ~~Agreement Regarding Proposed Stream or Lake Alteration~~ and the Conditions of this approval. These changes shall be incorporated into the Final Map for this project.
[This condition has been revised to delete the reference to the Section 404 permit issued for the filling of wetlands since no wetlands will be filled.]

81. The applicants shall plant the drainage corridors with willows and coastal scrub vegetation in the riparian corridors.

82. ~~The applicant shall make every effort to insure that wetland mitigation contributions (required by the Corps' permit) are spent in Half Moon Bay, if possible.~~
[This condition has been deleted since no wetlands filling is proposed and thus there is no need for Ailanto to contribute money for off-site wetlands mitigation.]

83. The applicant shall conduct a survey of the project site to determine the presence of agricultural fuel tanks. If they are located on the site, the applicant shall remove them in accordance with applicable state and federal standards, and submit verification of compliance to the Planning Director.

84. The applicant shall obtain a grading permit to provide parking for all construction workers on site prior to the commencement of grading or construction anywhere else on the site.

85. The applicant shall contact the Police Department 24 hours in advance, if 25 or more workers are to exit Terrace Avenue during the P.M. peek hour to allow the Police Department to provide some form of traffic control at the intersection of Terrace Avenue and Highway 1 if they deem necessary. The applicant shall reimburse the City for any costs related to such traffic control during the construction period.

86. The applicant shall make a best effort to recycle construction materials that are not utilized on the project site.

87. The applicant shall maintain Terrace Avenue free and clear of dirt and debris during the period that construction activities access the site from Terrace Avenue. This maintenance shall be done to the satisfaction of the City Engineer.

88. The applicant shall insure that heavy construction vehicles are placed on the project site from Terrace Avenue during non-peak commute hours. The applicant shall provide the Police Department 24 hours in advance of such activity.

4/6 JC Ann C
Chris K.
w/ attch

A PROFESSIONAL CORPORATION

CASSIDY
SHIMKO
DAWSON

April 6, 2000

RECEIVED
APR 06 2000
CALIFORNIA
COASTAL COMMISSION

VIA HAND DELIVERY

Jack Liebster
California Coastal Commission
45 Fremont Street, Suite 2000
San Francisco, CA 94105

Re: Pacific Ridge/Appeal No. A-1-HMB-99-022
Clarification of Our April 4, 2000 Letter

Dear Jack:

We are writing on behalf of our clients, Ailanto Properties, Inc., to clarify certain points made in our correspondence to you dated April 4, 2000. In that letter, we referred to and revised the City of Half Moon Bay's CDP Conditions of Approval, which has apparently caused some concern among Commission staff members. Please be advised that we understand that the City's CDP approval, including the Conditions of Approval, has been vacated by virtue of the Coastal Commission's decision to consider Aialnto's CDP application *de novo* based on the Commission's finding that the appeal raises one or more substantial issues. Nevertheless, it is Ailanto's intent to incorporate the City's Conditions of Approval, as revised, as part of the Pacific Ridge project.

In that connection, we would also like to make the following additional clarifications and changes to the Conditions of Approval as revised in the April 4, 2000 letter:

1. Condition No. 14 should be changed as follows:

   The Applicant shall provide a landscaping plan for approval by the ~~Architectural Review Committee~~ **City of Half Moon Bay Planning Director** that, when implemented, shall effectively screen the project liberally with trees along the western boundary line, and that shall also incorporate additional landscaping as screening for all homes adjacent to the 160-foot contour.

2. The following clarifying sentence should be added at the end of Condition No. 30 as follows:

   Equipment shall not be operated in the lake or its margins except during

20 CALIFORNIA ST. SUITE 500 SAN FRANCISCO, CA 94111 TELEPHONE: (415) 788-2040
FACSIMILE: (415) 788-2039

excavation and as may be necessary to construct barriers or fills. If work in the lake is unavoidable, a curtain enclosure to prevent siltation of the lake beyond the immediate working area shall be installed. The enclosure and any supportive material shall be removed when the work is completed. Wash water containing mud or silt from aggregate washing or other operations shall not be allowed to enter a lake or flowing stream. **Notwithstanding the above, it is understood that temporary water removal from the pond during the dry season may be necessary to construct drainage facilities at the pond.**

3. Condition No. 67 pertaining to evaluation for debris flow should be deleted. This condition is unnecessary since two different geotechnical firms have already evaluated the risk of landslides and debris flow onto the Pacific Ridge project side from the eastern hills.

For your convenience and use, a new set of Conditions to reflect the above changes is attached hereto as Exhibit A.

If you have any questions and comments on the foregoing, please do not hesitate to contact us.

Very truly yours,

Anna Shimko

Anna C. Shimko

cc: Bob Henry (via fax w/o encl.)
Steve Foreman (via fax w/o encl.)
Nancy Lucast (via fax w/o encl.)
Yuri Won

COASTAL DEVELOPMENT PERMIT- PDP 11-98
APPLICABLE CONDITIONS OF APPROVAL

1. The project shall be constructed in substantial compliance with the revised project layout dated January 24, 2000, and submitted to the Coastal Commission on January 26, 2000.

   [*This condition has been modified to reflect the current Project layout.*]

2. All design changes are in substantial conformance with the approved Vesting Tentative Map without amendments, and the applicant's vested rights will be fully preserved by development under this approval.

COASTAL RESOURCES CONSERVATION STANDARDS

3. For perennial streams on the property, riparian buffer zones shall be established within 50 feet from the limit of riparian vegetation, or where no riparian vegetation exists, within 50 feet from the bank edge.

4. For intermittent streams on the property, riparian buffer zones shall be established within 30 feet from the limit of riparian vegetation, or where no riparian vegetation exists, within 30 feet from the midpoint of the stream.

5. [*In response to Coastal Commission staff's concerns regarding fencing of riparian corridors, Ailanto no longer intends to implement this condition.*]

6. A buffer zone shall be established within 100 feet of the high water mark of the existing pond on the property.

7. No portion of any residential parcel shall be permitted within any established buffer zone on the property.

8. In those instances where a home is proposed on a lot adjacent to a riparian buffer zone on the property, and the home can not be moved any farther away from the edge of the established buffer zone without encroaching on the minimum required front yard setback, rear yards setbacks may be reduced to a minimum of 10 feet.

9. The Applicant shall install a vegetative fence (such as a hedgerow) along the northern, eastern and southern boundaries of the property to discourage children and small animals from crossing property lines.

10. The Applicant shall incorporate language within the CC&R's to limit the nuisance liability of adjacent property owners who engage in agricultural uses.

11. The Applicant shall install a bridge over the intermittent stream located where Foothill Boulevard is to cross over Drainage #3 near Terrace Avenue.

12. The Applicant shall install silt traps on the property as part of the on-site storm drain system. The homeowners shall be responsible to pay for the on-going maintenance of that portion of the storm drain system necessary for the City to achieve compliance with its NPDES permit. The homeowners may fund this on-going maintenance either through the Homeowner's Association as required by the CC&R's, or through an assessment district.

13. Prior to the start of construction, the Applicant shall conduct a survey to identify any raptor nesting sites on the property or to confirm the absence of such nesting sites. If raptor nesting sites are identified during the survey, specific setback distances shall be established by a qualified biologist, in consultation with the California Department of Fish and Game, based on the species of raptor occupying the nest. The Applicant shall do no work within the established setback distances of any occupied nests during breeding season, and no construction within the established setback shall take place until after all birds in the identified nest have fledged. The Applicant shall conform to Section 3503.5 of the California Fish and Game Code and all relevant provisions of the Migratory Bird Treaty Act as it pertains to raptors.

VISUAL RESOURCE PROTECTION AND DESIGN STANDARDS

14. The Applicant shall provide a landscaping plan for approval by the City of Half Moon Bay Planning Director that, when implemented, shall effectively screen the project liberally with trees along the western boundary line, and that shall also incorporate additional landscaping as screening for all homes adjacent to the 160-foot contour.

15. All streets on the property shall be illuminated through the use of indirect street lighting.

16. All structures on the property shall utilize muted paint colors and muted roof shingle tones, as previously approved by the Architectural Review Committee.

PROJECT ACCESS

17. The Applicant shall phase the Project as follows:

    a. Phase 1: During construction of the Project, construction traffic vehicles shall access the Project site via Terrace Avenue and the Applicant shall implement Conditions Nos. 84 to 88 set forth below. The Applicant shall also install speed bumps on Terrace Avenue to reduce vehicle speeds.

    b. Phase 2: Concurrently with Project construction, the Applicant shall design, obtain permit(s) for, fund and construct the widening of Highway 1 for a distance of 400 feet on each side of the intersection of Highway 1 and Terrace Avenue to accommodate additional lanes on Highway 1.

c. Phase 3: Occupancy shall not occur until the Phase 2 improvements have been completed. Project access shall be through Terrace Avenue. The Applicant shall install a traffic light at the intersection of Terrace Avenue and Highway 1 as soon as the Department of Transportation (Caltrans) determines signal warrants have been met.

d. Phase 4: When another access route becomes available, the Applicant shall remove the traffic light at the intersection of Terrace Avenue and Highway 1 and construct knock-down barriers at the Terrace Avenue/Pacific Ridge property line in order to convert Terrace Avenue into an emergency vehicle access route to the Project site.

e. Phase 4B: To mitigate for cumulative weekend traffic impacts at Highway 1 and Main Street, the Applicant shall contribute its fair share of the Highway 1 improvements between Terrace Avenue and Main Street once occupancy reaches 126 units.

[*This condition has been revised to require Ailanto to implement a project phasing plan.*]

18. The Applicant shall construct Foothill Boulevard on-site as shown on the Vesting Tentative Map, except that there will be two drive lanes and a bike lane in-lieu of four drive lanes. The on-site portion of Foothill Boulevard shall terminate at the proposed Bayview Drive at the north and at Brightwater Road at the south. The Applicant shall dedicate an easement to the City of Half Moon Bay from Brightwater Road to the southern property boundary so that the City could implement the remainder of Foothill Boulevard in the future in accordance with the LCP.

[*This condition has been revised to avoid the construction of portions of Foothill Boulevard on-site that would encroach onto the buffer zone for Wetland A on the northwest corner of the property.*]

WETLANDS AND RIPARIAN CORRIDORS

19. [*This condition has been deleted since the Wetland Mitigation and Monitoring Plan no longer applies to the Project.*]

20. Lot lines will not be permitted in the wetland and/or riparian buffer zone. The following restrictions apply:

21. The setback from riparian corridors shall be 50 feet from the bank edge for perennial streams and 30 feet from the midpoint of intermittent streams, or land on both sides of riparian corridors which extends 50 feet from the bank edge for perennial streams and 30 feet from the midpoint of intermittent streams where no riparian vegetation exists as defined in Section 18.38.075 D of the Zoning Ordinance.

22. The average setback from wetlands shall be 100 feet from the high point on lakes, ponds and marshes (although no buffer is required on manmade agricultural ponds and reservoirs, as defined in Section 18.38.080 D of the Zoning Ordinance). The pond is intended to be managed as a restored wetland area.

23. Disturbance or removal of vegetation shall not exceed the minimum necessary to complete operations. The disturbed portions of any stream channel or lake margin within the high water mark of the stream or lake shall be restored to as near their original condition as possible.

24. Restoration shall include the revegetation of stripped or exposed areas.

25. Installation of bridges, culverts, or other structures shall be such that water flow is not impaired and upstream or downstream passage of fish is assured at all times. Bottoms of temporary culverts shall be placed at or below stream channel grade. Bottoms of permanent culverts shall be placed below stream channel grade.

26. Plans for design of concrete sills and other features that could potentially impede fish migrations must be approved by Department of Fish and Game.

27. An adequate fish passage facility must be incorporated into any barrier that obstructs fish passage.

28. Equipment shall not be operated in the stream channels of flowing live streams except as may be necessary to construct crossings or barriers and fills at channel changes.

29. When work in a flowing stream is unavoidable, the entire stream flow shall be diverted around the work area by a barrier, temporary culvert, and/or a new channel capable of permitting upstream and downstream fish movement. Construction of the barrier and/or the new channel shall normally begin in the downstream area and continue in an upstream direction, and the flow shall be diverted only when construction of the diversion is completed. Channel bank or barrier construction shall be adequate to prevent seepage into or from the work area. Channel banks or barriers shall not be made of earth or other substances subject to erosion unless first enclosed by sheet piling, rock riprap, or other protective material. The enclosure and the supportive material shall be removed when the work is completed and the removal shall normally proceed from downstream in an upstream direction.

30. Equipment shall not be operated in the lake or its margins except during excavation and as may be necessary to construct barriers or fills. If work in the lake is unavoidable, a curtain enclosure to prevent siltation of the lake beyond the immediate working area shall be installed. The enclosure and any supportive material shall be removed when the work is completed. Wash water containing mud or silt from aggregate washing or other operations shall not be allowed to enter a lake or flowing stream. Notwithstanding the

above, it is understood that temporary water removal from the pond during the dry season may be necessary to construct drainage facilities at the pond.

31. If operations require moving of equipment across a flowing stream, such operations shall be conducted without substantially increasing stream turbidity. For repeated crossings, the operator shall install a bridge, culvert, or rock-fill crossing as specified in comments below.

32. Structures and associated materials not designed to withstand high seasonal flows shall be removed to areas above the high water mark before such flows occur.

33. No debris, soil, silt, sand, bark, slash, sawdust, rubbish, cement or concrete or washing thereof, oil or petroleum products or other organic or earthen material from any logging, construction, or associated activity of whatever nature shall be allowed to enter into or placed where it may be washed by rainfall or runoff into waters of the State. When operations are completed, any excess materials or debris shall be removed from the work area. No rubbish shall be deposited within 150 feet of the high water mark of any stream or lake.

34. The operator will notify the Department of Fish and Game of the date of commencement of operations and the date of completion of operations at least five days prior to such completion.

35. Prior to the commencement of any construction activities, the Applicant shall enter into a new Streambed Alteration Agreement with the Department of Fish and Game with respect to any changes proposed to streambed areas or the diversion or obstruction of natural stream flows. The Applicant shall comply with any and all conditions imposed by the Department of Fish and Game in connection with the Streambed Alteration Agreement.

[*Conditions Nos. 35 to 41 are no longer valid since the referenced Streambed Alteration Agreement has expired and must be renewed. The conditions have been replaced with a requirement that Ailanto enter into a new Streambed Alteration Agreement with the Department of Fish and Game prior to commencing construction activities and to comply with any conditions that the agency may impose.*]

36. [*Conditions Nos. 35 to 41 are no longer valid since the referenced Streambed Alteration Agreement has expired and must be renewed. See new Condition No. 35.]*

37. [*Conditions Nos. 35 to 41 are no longer valid since the referenced Streambed Alteration Agreement has expired and must be renewed. See new Condition No. 35.]*

38. [*Conditions Nos. 35 to 41 are no longer valid since the referenced Streambed Alteration Agreement has expired and must be renewed. See new Condition No. 35.]*

39. [*Conditions Nos. 35 to 41 are no longer valid since the referenced Streambed Alteration Agreement has expired and must be renewed. See new Condition No. 35.*]

40. [*Conditions Nos. 35 to 41 are no longer valid since the referenced Streambed Alteration Agreement has expired and must be renewed. See new Condition No. 35.*]

41. [*Conditions Nos. 35 to 41 are no longer valid since the referenced Streambed Alteration Agreement has expired and must be renewed. See new Condition No. 35.*]

42. [*Conditions Nos. 42 to 56 no longer apply since they are the Clean Water Act section 404 permit conditions that were imposed in connection with the proposal to fill wetlands. A Section 404 permit for the filling of wetlands is no longer required since no wetlands will be filled; however, Ailanto has incorporated most of these conditions as part of the Project to enhance habitat for the red-legged frog and the San Francisco garter snake.*]

43. [*Conditions Nos. 42 to 56 no longer apply since they are the Clean Water Act section 404 permit conditions that were imposed in connection with the proposal to fill wetlands. A Section 404 permit for the filling of wetlands is no longer required since no wetlands will be filled; however, Ailanto has incorporated most of these conditions as part of the Project to enhance habitat for the red-legged frog and the San Francisco garter snake.*]

44. [*Conditions Nos. 42 to 56 no longer apply since they are the Clean Water Act section 404 permit conditions that were imposed in connection with the proposal to fill wetlands. A Section 404 permit for the filling of wetlands is no longer required since no wetlands will be filled; however, Ailanto has incorporated most of these conditions as part of the Project to enhance habitat for the red-legged frog and the San Francisco garter snake.*]

45. [*Conditions Nos. 42 to 56 no longer apply since they are the Clean Water Act section 404 permit conditions that were imposed in connection with the proposal to fill wetlands. A Section 404 permit for the filling of wetlands is no longer required since no wetlands will be filled; however, Ailanto has incorporated most of these conditions as part of the Project to enhance habitat for the red-legged frog and the San Francisco garter snake.*]

46. [*Conditions Nos. 42 to 56 no longer apply since they are the Clean Water Act section 404 permit conditions that were imposed in connection with the proposal to fill wetlands. A Section 404 permit for the filling of wetlands is no longer required since no wetlands will be filled; however, Ailanto has incorporated most of these conditions as part of the Project to enhance habitat for the red-legged frog and the San Francisco garter snake.*]

47. [*Conditions Nos. 42 to 56 no longer apply since they are the Clean Water Act section 404 permit conditions that were imposed in connection with the proposal to fill wetlands. A Section 404 permit for the filling of wetlands is no longer required since no wetlands will be filled; however, Ailanto has incorporated most of these conditions as part of the Project to enhance habitat for the red-legged frog and the San Francisco garter snake.*]

48. [*Conditions Nos. 42 to 56 no longer apply since they are the Clean Water Act section 404 permit conditions that were imposed in connection with the proposal to fill wetlands. A Section 404 permit for the filling of wetlands is no longer required since no wetlands will be filled; however, Ailanto has incorporated most of these conditions as part of the Project to enhance habitat for the red-legged frog and the San Francisco garter snake.*]

49. [*Conditions Nos. 42 to 56 no longer apply since they are the Clean Water Act section 404 permit conditions that were imposed in connection with the proposal to fill wetlands. A Section 404 permit for the filling of wetlands is no longer required since no wetlands will be filled; however, Ailanto has incorporated most of these conditions as part of the Project to enhance habitat for the red-legged frog and the San Francisco garter snake.*]

50. [*Conditions Nos. 42 to 56 no longer apply since they are the Clean Water Act section 404 permit conditions that were imposed in connection with the proposal to fill wetlands. A Section 404 permit for the filling of wetlands is no longer required since no wetlands will be filled; however, Ailanto has incorporated most of these conditions as part of the Project to enhance habitat for the red-legged frog and the San Francisco garter snake.*]

51. [*Conditions Nos. 42 to 56 no longer apply since they are the Clean Water Act section 404 permit conditions that were imposed in connection with the proposal to fill wetlands. A Section 404 permit for the filling of wetlands is no longer required since no wetlands will be filled; however, Ailanto has incorporated most of these conditions as part of the Project to enhance habitat for the red-legged frog and the San Francisco garter snake.*]

52. [*Conditions Nos. 42 to 56 no longer apply since they are the Clean Water Act section 404 permit conditions that were imposed in connection with the proposal to fill wetlands. A Section 404 permit for the filling of wetlands is no longer required since no wetlands will be filled; however, Ailanto has incorporated most of these conditions as part of the Project to enhance habitat for the red-legged frog and the San Francisco garter snake.*]

53. [*Conditions Nos. 42 to 56 no longer apply since they are the Clean Water Act section 404 permit conditions that were imposed in connection with the proposal to fill wetlands. A Section 404 permit for the filling of wetlands is no longer required since no wetlands will be filled; however, Ailanto has incorporated most of these conditions as part of the Project to enhance habitat for the red-legged frog and the San Francisco garter snake.*]

54. [*Conditions Nos. 42 to 56 no longer apply since they are the Clean Water Act section 404 permit conditions that were imposed in connection with the proposal to fill wetlands. A Section 404 permit for the filling of wetlands is no longer required since no wetlands will be filled; however, Ailanto has incorporated most of these conditions as part of the Project to enhance habitat for the red-legged frog and the San Francisco garter snake.*]

55. [*Conditions Nos. 42 to 56 no longer apply since they are the Clean Water Act section 404 permit conditions that were imposed in connection with the proposal to fill wetlands. A Section 404 permit for the filling of wetlands is no longer required since no wetlands will*

be filled; however, Ailanto has incorporated most of these conditions as part of the Project to enhance habitat for the red-legged frog and the San Francisco garter snake.]

56. [*Conditions Nos. 42 to 56 no longer apply since they are the Clean Water Act section 404 permit conditions that were imposed in connection with the proposal to fill wetlands. A Section 404 permit for the filling of wetlands is no longer required since no wetlands will be filled; however, Ailanto has incorporated most of these conditions as part of the Project to enhance habitat for the red-legged frog and the San Francisco garter snake.*]

WATER QUALITY

57. As required for projects disturbing five (5) acres or more, the applicant shall submit a Storm Water Pollution Prevention Plan (SWPPP) for review by the City Engineer prior to the issuance of any grading permits. The SWPPP shall be implemented by the general contractor and all subcontractors and suppliers of material and equipment. Construction site cleanup and control of contraction debris shall also be addressed in the SWPPP. The developer is responsible for complying with the SWPPP. Failure to do so will result in the issuance of correction notices, citations or project stop work order.

58. The Storm Water Pollution Prevention Plan shall be prepared and implemented to the satisfaction of the Regional Water Quality Control Board.

59. The May 1990 Dykstra Ranch Pond Water Quality Management Plan shall be revised and implemented to the satisfaction of the San Francisco Regional Water Quality Control Board.

60. Prior to the commencement of any clearing, grading or excavation resulting in a land disturbance greater than five acres, the developer shall provide evidence that a Notice of Intent (NOI) has been sent to the California State Water Resources Control Board.

61. All storm drain inlets shall be labeled "No Dumping - Drains to Bay" using thermoplastic lettering or as approved by the Public Works Director/City Engineer.

62. Street grade along the face of curb shall have a minimum of 0.5%.

63. No drainage shall be directed over slopes.

64. All lots shall be graded so as not drain onto any other lot adjoining property prior to being deposited to an approved storm drainage system.

65. 12" minimum storm drain pipe shall be used.

SOIL ENGINEERING

66. Project construction shall conform to the recommendations in the February 1997 Soil Engineering Study by Earth System Consultants, of both the overall subdivision and the reservoir pond, which shall be reviewed and accepted to the satisfaction of the City Engineer.

67. [*This condition has been deleted since it is unnecessary.*]

68. Grading shall be done under the continuous inspection of the Soils Engineer and in compliance with the grading plans and recommendations of the Soils Engineer. Upon its completion, the Soils Engineer shall submit a declaration to the Director of Public Works/City Engineer that all work has been done in accordance with the recommendations contained in the soils report and the approved grading plans.

69. Any grading, stockpiling, storing of equipment or material on adjacent properties shall require written approval of those property owners affected. Copies of the rights-of-entry shall be furnished to the Director of Public Works/City Engineer.

70. No cut and fill slopes shall exceed 2:1 unless approved by the Director of Public Works/Engineer.

71. The project civil engineer shall certify that the finished graded building pads are within 0.1 feet in elevation of those shown on the approved grading plans.

OTHER CONDITIONS

72. All fire protection requirements of the Half Moon Bay Fire Protection District shall be met prior to the commencement of construction.

73. If historic or archeological resources are uncovered during grading activities, all work shall stop and the applicant shall retain a qualified archeologist. At the applicant's expense the qualified archeologist will perform an archeological reconnaissance and develop mitigation measures to protect archeological resources.

74. Pursuant to Chapter 14.40 of the Half Moon Bay Municipal Code, the hours of any construction operations shall be limited to 7:00 a.m. to 6:00 p.m. Monday through Friday, 8:00 a.m. to 6:00 p.m. Saturday, and 10:00 a.m. to 6:00 p.m. Sundays and Holidays.

GENERAL

75. Development of the Pacific Ridge subdivision shall conform to all standards and regulations in Zoning Ordinance section 18.16, the Dykstra Ranch PUD.

76. The Conditions of the Vesting Tentative Map approved in 1990, Final Subdivision Map submittal, grading, drainage, traffic circulation, and residential construction are hereby required with the exception of number 35 and the following modification to number 38: Foothill Boulevard shall have 6 inch vertical curb and gutter, in lieu of rolled curb and gutter, and shall be crowned at the centerline with a minimum cross slope of two percent.

77. All structures shall be designed and constructed in compliance with the Uniform Building Code, the Half Moon Bay Municipal Code and the Half Moon Bay Standard Details.

78. Development shall be in substantial conformance with the approved project plans, including the site plan and building elevations, except for any changes that may be required by these conditions of approval. The Planning Director shall review and approve any deviation from the approved plans.

79. The Coastal Development Permit shall expire in accordance with the provisions of Zoning Ordinance section 18.20.080 which state as follows: A Coastal Development Permit shall expire on the latest date applicable to any other discretionary or ministerial permit or approval require for the development, including any extension granted for other permits or approvals. Should the development not require City permits or approvals other than a Coastal Development Permit, the Coastal Development Permit shall expire one year from its date of approval if the development has not begun during that time.

[*This condition has been revised to correctly state the provisions of Zoning Ordinance § 18.20.080.*]

80. The applicant shall revise the site plan to incorporate all mitigation measures that may be required by the U.S. Army Corps of Engineers, the California State Department of Fish and Game and the Conditions of this approval. These changes shall be incorporated into the Final Map for this project.

[*This condition has been revised to delete the reference to the Section 404 permit issued for the filling of wetlands since no wetlands will be filled.*]

81. The applicant shall plant the drainage corridors with willows and coastal scrub vegetation in the riparian corridors.

82. [*This condition has been deleted since no wetlands filling is proposed and thus there is no need for Ailanto to contribute money for off-site wetlands mitigation.*]

83. The applicant shall conduct a survey of the project site to determine the presence of agricultural fuel tanks. If they are located on the site, the applicant shall remove them in accordance with applicable state and federal standards, and submit verification of compliance to the Planning Director.

84. The applicant shall obtain a grading permit to provide parking for all construction workers on site prior to the commencement of grading or construction anywhere else on the site.

85. The applicant shall contact the Police Department 24 hours in advance, if 25 or more workers are to exit Terrace Avenue during the P.M. peek hour to allow the Police Department to provide some form of traffic control at the intersection of Terrace Avenue and Highway 1 if they deem necessary. The applicant shall reimburse the City for any costs related to such traffic control during the construction period.

86. The applicant shall make a best effort to recycle construction materials that are not utilized on the project site.

87. The applicant shall maintain Terrace Avenue free and clear of dirt and debris during the period that construction activities access the site from Terrace Avenue. This maintenance shall be done to the satisfaction of the City Engineer.

88. The applicant shall insure that heavy construction vehicles are placed on the project site from Terrace Avenue during non-peak commute hours. The applicant shall provide the Police Department 24 hours in advance of such activity.

Jonathan Wittwer
William P. Parkin
Christiane Sinclair

WITTWER & PARKIN, LLP
147 SOUTH RIVER STREET, SUITE 221
SANTA CRUZ, CALIFORNIA 95060
TELEPHONE: (831) 429-4055
FACSIMILE: (831) 429-4057
E-MAIL: office@wittwerparkin.com

RECEIVED
APR 20 2000
CALIFORNIA
COASTAL COMMISSION

April 18, 2000

VIA FACSIMILE AND U.S. MAIL

Anne Cheddar, Esq.
Jack Liebster
California Coastal Commission
45 Fremont Street, Suite 2000
San Francisco, CA 94105-2219
Facsimile: (415) 904-5400

Re: Pacific Ridge: Appeal No. A-1-HMB-99-022

Dear Ms. Cheddar and Mr. Liebster:

This office submits the following letter regarding the above referenced appeal on behalf of Appellants Eleanor Wittrup and George Carman (hereinafter "Appellants"). Given the short time frame in which the Appellants have had to review the revised plan for the Pacific Ridge Project, I will likely follow this letter with further correspondence to the Commission outlining the Appellants' position. However, I wanted to give staff some initial impressions of the revised plan in time for your staff report to the Commission.

Project History

The Commission should be well aware of the manner in which the Project has been processed by the City, and how that process has led to the appeal for the Commission. As you know, in 1990, the City of Half Moon Bay approved a Vesting Tentative May for the 228-unit Dykstra Ranch Project, which is the previous incarnation of Pacific Ridge. It is unclear from the record whether the project applicant or Ailanto ever submitted a final subdivision map within the time frame required under the Subdivision Map Act, or pursuant to any related extensions of the time. *See* Government Code Sections 66498.1, 66452.6, 66452.11, 66452.13. It appears that the tentative map had indeed expired.

In addition to there being no approval of a final map for Dykstra Ranch, the project never received a Coastal Development Permit ("CDP") pursuant to the Coastal Act. At the time of the approval of the Vesting Tentative Map in 1990, the City of Half Moon Bay did not have a certified Local Coastal Program ("LCP"). Because a CDP was never sought or granted, Ailanto applied to the City of Half Moon Bay for a CDP in 1998.

The Planning Commission heard the application, and denied the application on the grounds that the Project did not conform to the LCP. The Planning Commission expressed the following concerns:

1) Conformity with Zoning Code Chapter 18.37 (Visual Resources) and Chapter 18.38 (Coastal Resources)
2) Impacts on Wetlands
3) Impacts on Visual Resources
4) Debris Flow Hazards
5) The connection of Foothill Boulevard to Grandview
6) The construction of Foothill Boulevard
7) Adequacy of Environmental Review, which only consisted of a negative declaration.

Ailanto appealed the Planning Commission's decision to the City Council.

During the City Council's consideration of the CDP, Ailanto Properties threatened to sue the City if it did not approve the CDP as requested. Ailanto claimed that it had a vested right pursuant to the Vesting Tentative Map. As a result, after the Planning Commission decision was appealed, two members of the City Council were appointed to a subcommittee to negotiate with Ailanto to ostensibly avoid threatened litigation. These closed door negotiations resulted in a compromise plan wherein Ailanto would only build 197 single family homes, instead of the 228 units originally proposed. I have attached hereto staff reports and letters which prove the conduct of these negotiations and the threats of litigation.

The Appellants and others were critical of this process. Ailanto had no vested right to the Project because it had not received approval of a final map, and it had not previously sought a CDP. Assuming, for argument, that Ailanto could claim a vested rights to the 1990 subdivision, it could not claim any vested rights to the Project that was before the Council because its conditions and layout have been substantially revised, and it the primary access to the Project has been radically changed. But, a final map must conform to the tentative map in order to be valid. Government Code Sections 66457, 66747.1. Accordingly, changes to the Vesting Tentative Map required the submission of a new tentative map for approval.

In short, the public was shut out of the process because the City Council succumbed to specious claims that the City would be liable if it did not approve Pacific Ridge, and by the time the matter had come before the City Council, project approval was *a fait accompli.*

In 1999, the City Council approved the negative declaration for the Pacific Ridge Project and the CDP. The negative declaration was based on the previously approved Dykstra Ranch EIR which was prepared as early as 1988. This fact alone highlights the outdated nature of the environmental review. Indeed, no one could argue that there have been a number of changes in the Half Moon Bay environment and circumstances that warranted a new environmental impact

report.

As a result of the City's approval of the Pacific Ridge Project, Appellants filed this appeal. Furthermore, an organization concerned with environmental issues in Half Moon Bay and its environs, the Coastside Community Association and two other individuals filed a Petition for Writ of Mandate alleging violations of the California Environmental Quality Act ("CEQA"), the Subdivision Map Act, the Brown Act, and Public Records Act. *Coastside Community Assoc., et al. v. City of Half Moon Bay, et al.* (San Mateo County Superior Court Case # 409070). Appellants are also members of the larger Coastside Community Association.

The Appellants believe that the City was bullied into approving this Project on the basis of a claim of vested rights when no such rights exist. However, as part of this appeal, Ailanto has revised the Project to further reduce the number of units to 145 single-family homes in the hopes that the Commission will approve the Project. Obviously, Ailanto's claim of vested rights and legal threats were nothing more than a ruse to extract approval from the City. If it really had a cognizable claim of vested rights, it would not now be willing to revise the Project in the hopes that the Commission will approve the Project in some form.

The Appellants have confidence in the Commission's process, particularly since the local process has been abysmal. However, the Project that is now before the Commission is a completely revised project from the one that was appealed. While the changes do not resolve the issues in the matter filed in San Mateo Superior Court and the appeal before this Commission, the revisions have further complicated an already confusing and incomplete process.

The applicant, Ailanto, has created this anomalous situation. The applicant forced the Project on the City through the threat of litigation. The City, in turn, never adequately complied with the requirements of CEQA, the Subdivision Map Act or the Coastal Act. Then the Applicant radically revises the Project while it is being considered on appeal. However, Ailanto should be required to submit a new application and tentative map to the City for the revised Project. Accordingly, Appellants request that the Commission overturn the decision of the City and deny issuance of the CDP. This would have the effect of forcing the City to consider this newly constituted project in compliance with CEQA, the Subdivision Map Act, and other provisions of law.

The Commission will essentially be the first authority to rule on the revised plan for Pacific Ridge. If the Commission reviews and approves the revised plans submitted by the Applicant without sending the matter back to the City for further consideration, the Commission is really not acting as an agency with appellate jurisdiction, but is actually acting as the principle permitting authority. While this may be appropriate, this situation begs the question of whether Half Moon Bay should have a certified LCP in the first place since the City apparently does not have the wherewithal to implement its LCP. In short, the Commission has been given the burden to do what the City should have done in the first place.

Impacts to ESHA

The Coastal Act provides that "Environmentally sensitive habitat areas shall be protected against any significant disruption of habitat values, and only uses dependent on those resources shall be allowed within those areas." Public Resources Code Section 30240(a). Further, the Coastal Act provides that

> "Development in areas adjacent to environmentally sensitive habitat areas and parks and recreation areas shall be sited and designed to prevent impacts which would significant degrade those areas, and shall be compatible with the continuance of those habitat and recreation areas." Public Resources Code Section 30240(b).

The Half Moon Bay LCP contains provisions adopting these same standards. *See*, HMB Local Coastal Program, Policy 3-1, et seq.

According to Ailanto, the drainages are the only areas that constitute environmentally sensitive habitat areas ("ESHA"). However, in Appellants' view, the Project site contains more ESHA than Ailanto is willing to admit. ESHA includes not only riparian habitat and wetlands, but also includes habitat for three endangered or threatened species: San Francisco Garter Snake, California Red-legged Frog, and Coastal Terrace Prairie. The Project, even as revised, does not protect all ESHA from development, and development adjacent to ESHA does not "prevent impacts which would significantly degrade those areas...."

Half Moon Bay LCP Policy 3-5 requires "all applicants to prepare a biologic report by a qualified professional selected jointly by the applicant and the City to be submitted ***prior to development review***." [Emphasis added]. Appellants contend that any biotic review to date has not been adequate because until the matter was appealed to the Commission, there was a complete failure of the City to consider impacts to ESHA. Further, any scant biotic review that has been prepared prior to the appeal to the Commission (e.g., the December 1997 Wetland Mitigation and Monitoring Plan) has not be performed by a professional selected ***jointly*** by the applicant and the City. Accordingly, the approval of the Pacific Ridge Project does not conform to the City's LCP. The fact that the Ailanto submitted an additional Biological Resources Report after this appeal was filed is yet more proof that the City did not properly process the CDP application and the Commission is the first agency to undertake true review of this project.

It should be further noted that LCP Policy 3-25(b) requires Ailanto "to make sufficiently detailed analyses of any construction which could impair the potential or existing migration routes of the San Francisco garter snake. Such analyses will determine appropriate mitigation measures to be taken to provide appropriate mitigation corridors." LCP Policy 3-23 also requires that for rare and endangered species

> "that a qualified biologist prepare a report which defines the requirements of rare and

> endangered organisms. At minimum, require the report to discuss: (1) animal food, water, nesting or denning sites and reproduction, predation and migration requirements, (2) plants' life histories and soils, climate, and geographic requirements, (3) a map depicting the locations of plants or animals and/or their habitats, (4) any development must not impact the functional capacity of the habitat, ad recommended mitigation if development is permitted within or adjacent to identified habitats." *See also*, HMB Zoning Code Section 18.15.035.

Ailanto has failed to detail the migration routes of the garter snake or to provide a report which outlines the requirements detailed in Policy 3-23. Accordingly, a CDP cannot be issued to Ailanto for the Pacific Ridge Project.

Further, an adequate biological report would show that the proposed development will isolate and fragment the riparian areas where the garter snakes and red-legged frogs reside, because as the plans show, open areas between riparian corridors will be heavily developed. Ailanto assumes that only the riparian areas and stock pond are habitat for the garter snake and red-legged frog. But, the LCP acknowledges that "the snake has been caught in open grassy areas some distance from riparian or marshy habitats."

Finally, Ailanto has been completely glossed over the fact that the project site contains "coastal terrace prairie". Coastal terrace prairie is considered a sensitive habitat according California Department of Fish & Game (CDFG) due to the prevalence of native plant species, potential for rare, threatened or endangered species and its extremely limited distribution regionally and within the world. Given its precarious status and viability throughout coastal California, it certainly qualifies as ESHA.

Coastal terrace prairie has been identified in some areas of the Project that appear to be outside developed areas. However, there is no information or analysis provided as to the true extent of the prairie onsite, its long term viability, and whether development in proximity to this habitat will spell its demise. Accordingly, the requisite biological reports fail to identify and analyze the Project's impact on this environmentally sensitive habitat.

Prime Agricultural Land

According to LCP Subchapter 9.3.7, Dykstra Ranch contains some prime soils. Further, the area has long been used for grazing.

There is no analysis of the location of these prime soils or the quality of the grazing land. These determinations are essential to analysis of the Project's compliance with the Coastal Act. If the land does contain prime agricultural land, development potential could be further

restricted. Public Resources Code Section 30241 states that "The maximum amount of prime agricultural land shall be maintained in agricultural production to assure the protection of the area's agricultural economy...." The conversion of agricultural land in the Dykstra Ranch might run afoul of Section 30241. Accordingly, an adequate determination as to the quality of the soils and the grazing land is essential to any decision on the CDP for Pacific Ridge.

Project Access

The City Council choose to designate Terrace Avenue as "temporary" access to the subdivision and deferred consideration of permanent access until a later date. The Council committed to determine permanent primary access to Pacific Ridge "within nine months of the approval of the Coastal Development permit...." *See* conditions of CDP for Pacific Ridge. Appellants contend that the Council was legally required to consider permanent access when it approved the CDP on March 16,1999. As the Coastside Community Association's lawsuit alleges, the City improperly deferred determination of access until after the issuance of the CDP. Now, Ailanto is asking that the Commission allow access through Terrace Avenue until other access (which has yet to be determined) becomes available. Appellants submit that such a position is unfair to the existing residents of Half Moon Bay, who will be forced to live with the uncertainty of such an approval. Perhaps the only reason Ailanto could possibly want to defer this question is due to the fact that access is logistically difficult to solve. The City Council has already stated on the record that they prefer to not have permanent access to Pacific Ridge through any existing neighborhoods, such as Terrace Avenue. However, if Ailanto begins constructing the Project, and other permanent access points never materialize, the City will have no choice but to allow access through existing neighborhoods.

It is axiomatic that access to a subdivision is an absolute necessity for the project to be viable. The Dykstra Ranch Project, as approved by the City in 1990, designates Foothill Boulevard as the primary access to Pacific Ridge. The City is also bound by section 18.16.070 of the Half Moon Bay Zoning Code, which is specific to Dykstra Ranch, provides:

> "*That Foothill Boulevard shall be constructed with a connection to Highway 1* and all intersection improvements at Foothill Boulevard and State Route 92 and the proposed Bayview Drive and Highway 1 shall be installed prior to the issuance of any building permits for any additional units after the first 100 dwelling units are constructed...." [*Emphasis added*].

The City's own zoning ordinances condition Dykstra Ranch on the construction of Foothill Boulevard. As such, any proposal for Pacific Ridge to proceed without construction of Foothill Boulevard would violate the City Zoning Ordinances and Local Coastal Program.

Appellants, however, are not advocates for the construction of Foothill Boulevard.

Indeed, their position is to the contrary because Foothill Boulevard would result in development and impacts to wetlands and environmentally sensitive habitats. Accordingly, its construction would violate the California Coastal Act. But, previous consideration of Pacific Ridge was premised on the construction of Foothill Boulevard as contemplated in the City's LCP. New information concerning the environmental impact of Foothill Boulevard and feasibility of that roadway now render Foothill Boulevard, and possibly Pacific Ridge, unacceptable. And, **because Ailanto has no vested right to build Pacific Ridge, the Commission should not grant the CDP with alternative access merely because circumstances have changed. Such a decision can only be made through the consideration of an LCP amendment considered by the City and submitted to the Commission.**

The access component of this project raises serious procedural and environmental concerns. The Planning Commission determined that the project's anticipated traffic impacts on State Highway 1 at Main and on State Route 92 at Main could not be totally mitigated to acceptable levels due to contributions of cumulative traffic. Foothill Boulevard was previously considered the only way to adequately serve Dykstra Ranch. The City Council's failure to address this issue as part of the approval of the CDP defies logic, and puts the burden to determine appropriate access on the Commission.

Thank you for your consideration of these comments. If you have any questions, please feel free to call me.

Very truly yours,

William P. Parkin

WPP/ds

AILANTO PROPERTIES, INC.
ONE KAISER PLAZA / ORDWAY BUILDING / SUITE 1775
OAKLAND, CA 94612 • (510) 465-8888 • FAX (510) 465-5704

September 23, 1997

RECEIVED
SEP 25 1997
CITY OF HALFMOON BAY
PLANNING DEPT

Mr. Bud Carney
Planning Director
City of Half Moon Bay
501 Main Street
Half Moon Bay, CA 94019

Re: Dykstra Ranch Property

Dear Bud:

It was a pleasure meeting you last week in our meeting of September 16, 1997 to discuss our upcoming project, Pacific Ridge at Half Moon Bay. There were a few issues raised that were contrary to our understanding pertaining to our project approvals. I would like to summarize them for you here.

I left the meeting with the feeling that City Staff believes the Coastal Development Permit was an entirely different approval track from the Final Map and that the approval process for this permit was unclear.

Ailanto Properties is of the position that 1) approval of the Coastal Development Permit is a ministerial act and 2) the Coastal Development Permit and Final Map(s) are to be processed concurrently. We believe this for the reasons outlined below.

On 8/7/90, the Half Moon Bay City Council adopted the Resolution unanimously approving the Dykstra Ranch Vesting Tentative Map and the Ordinance adding the Dykstra Ranch Specific Plan / Planned Community Development Plan as Chapter 18.16 of the Zoning Code. The Findings in both the Resolution and Ordinance included a determination that the project was consistent with all applicable policies set forth in the Certified Land Use Plan. When the implementing Ordinances were adopted unanimously by the City Council and submitted to the Coastal Commission, Chapter 18.16, the Dykstra Ranch Planned Community Development Plan, was included. Chapter 18.16 is based upon the requirements in the Land Use Plan for the Dykstra Ranch Planned Community and implements all of the Conditions of Approval imposed by the City in approving the project. The Coastal Commission certified all of the implementing Ordinances as being in conformance with the California Coastal Act and the Certified Land Use Plan. In fact, there were no suggested amendments to any of the provisions of Chapter 18.16 from the Coastal Commission, clearly implying conformance with all applicable Coastal Act requirements.

There was a long period of time before the City's L.C.P. was certified that the Coastal Commission was not accepting applications for Coastal Development Permits due to the sewer moratorium in effect. Subsequently, the L.C.P. was certified and permit authority transferred to the City. Any project that

was before the Coastal Commission as a new application or amendments to previously approved Coastal Development Permits remained with the Coastal Commission. All other new applications were to be processed under the City's permit authority. Because the Vesting Tentative Map and all other discretionary approvals occurred prior to the certification of the City's L.C.P., the only action remaining for the City is the ministerial approval of the Final Map(s). A Coastal Development Permit may be processed concurrently with the Final Map, with the statutory test being conformance with the Vesting Tentative Map and with Chapter 18.16, the Dykstra Ranch Planned Community Development Plan. The City Council and Coastal Commission have already determined that Chapter 18.16 is consistent and in conformance with both the City's Certified Local Plan and the Coastal Act. For this reason, the Coastal Development Permit should be a ministerial approval. To impose any other permit or procedural requirements at this time is inconsistent with the State Subdivision Map Act and City Subdivision Code inasmuch as this could constitute additional requirements which were not in place at the time of Map approval. Also, we believe that Chapter 18.20, the Ordinance establishing the procedures for the City to approve Coastal Development Permits, requires concurrent processing of the Final Map and Coastal Development Permit as described in section 18.20.045, Application Requirements.

In another matter, an issue was raised in the meeting regarding a requirement to maintain a 100-foot wetlands buffer zone from the homes to our lake as required by section 18.38.080 D of the Zoning Code for Coastal Resource Conservation Standards. This ordinance was not a requirement when our project was approved in August, 1990.

Ailanto Properties purchased the Dykstra Ranch from WSI Industries in December 1985. This previous owner had a Tentative Map approved at the time which called for the removal of this lake. Ailanto Properties decided that it would be better to maintain the lake as a visual amenity and wildlife habitat. For this reason, our Vesting Tentative Map designed around this feature even though the number of lots was reduced. The Dykstra Ranch Planned Unit Development Ordinance noted above does not require a wetlands buffer zone to the lake. Because of our lot sizes, the Vesting Tentative Map as approved does not have space for a 100-foot buffer. The L.C.P. does specify a buffer zone requirement but makes an exception for man-made ponds. Our DEIR, which amplifies this exception on page 29, makes it very clear that "the pond on the site is not protected by LCP policies because it is a man-made structure built for agricultural purposes." Through the statewide clearinghouse distribution network, not a single agency had a comment on this specific item, including the Coastal Commission, Fish & Game or the U. S. Corp of Engineers.

Please review these items again and let me know if you are in disagreement with any of these clarifications. Also, I would appreciate it if you could forward a copy of the Coastal Development Permit Application form. I look forward to hearing from you soon. Thank you.

Sincerely,

Robert Henry

Robert Henry
Construction Manager

BUSINESS OF THE CITY COUNCIL
OF THE CITY OF HALF MOON BAY

AGENDA REPORT

For the meeting of: March 16, 1999

TO: Mayor and City Council

FROM: Anthony J. "Bud" Carney, AICP, Planning Director

TITLE: PDP-11-98 - Appeal of the Planning Commission Denial, Without Prejudice, of the Requested Coastal Development Permit

RECOMMENDATION:

Staff recommends that the City Council approve the project subject to the findings and conditions of the attached resolution. (Attachment #1).

PROJECT DATA:

Applicants/owners:	Ailanto Properties/Robert Henry 1 Kaiser Plaza, Ste. 1775, Oakland, CA 94612
Request:	Coastal Development Permit (CDP) for a previously approved Vesting Tentative Subdivision Map with 197 lots, plus open space parcels. The CDP also relates individually to each of the 197 proposed detached single family homes proposed in the Pacific Ridge Subdivision.
Location:	Adjacent to the east end of Grand View Boulevard. APNs 056-350-010, 048-269-060 & 048-269-070.
Application Date:	May 19, 1998.
L.C.P. Designation:	Planned Development
Existing Zoning:	Planned Unit Development
Project Description:	The proposal is to subdivide 114 acres into 197 lots for detached single family homes, and provide streets, open space parcels and neighborhood park areas.

Surrounding Zones:	North – U-R and San Mateo County South – Planned Unit Development East – San Mateo County West – R-1, B-2.
CEQA Status:	An Environmental Impact Report was certified on August 7, 1990 for a 216-unit subdivision on this property. An Initial Study was completed on July 29, 1998 to verify the applicability of the EIR prepared in 1990 to the current project.

BACKGROUND:

In 1990, the Planning Commission and City Council found that the Vesting Tentative Subdivision Map conformed with the City Plans and Ordinances including the specific General Plan policies related to Dykstra Ranch, the PUD Zoning (adopted as part of project approval) and the requirements for a Vesting Tentative Map. At the December 15, 1998 meeting, the Planning Commission denied the Coastal Development Permit for the Pacific Ridge Project based on the findings that the project did not conform to the Local Coastal Plan. The City Council considered the appeal at the following public hearings: January 5, 12, 24, 1999, February 9, 1999. The City Council appointed a committee to negotiate a settlement with Ailanto Properties at the Public Hearing on January 24, 1999. Since that time, the committee has entered into negotiations with the project applicant to resolve those issues, which provided the basis for the Planning Commission's decision.

DISCUSSION:

Following negotiations with the City Council committee, the project applicant has revised the site plan, reducing the total number of residential units at the project site from 213 to 197. The revised site plan also provides protection for riparian habitats through the establishment of the following setbacks:

- 100 feet from the edge of the existing pond at the project site;
- 50 feet from the edge of the perennial stream in the northeastern portion of the project site;
- 30 feet from the limit of riparian vegetation associated with intermittent streams at the project site; and
- 30 feet from the mid-point of intermittent streams at the project site when riparian vegetation is not present.

Development of the project site would conform to the requirements established by the U.S. Army Corps of Engineers Section 404 Permit, and the modified site plan would provide protection for all wetlands to be retained and/or created on-site under the terms of that permit.

The City Council committee and the project applicant have also agreed on several additional conditions, which are intended to enable the project to conform to the policies of the Local Coastal Plan (Attachment #1).

SUMMARY:

Based on the results of negotiations between the City Council committee and the project applicant, which reduced the overall residential density at the project site and provided additional protection for wetlands and riparian corridors on-site, Staff recommends that the City Council approve the project subject to the findings and conditions of the attached resolution. (Attachment #1).

Prepared by:

Joan Lamphier, Lamphier & Associates
under the direction of
Anthony J. "Bud" Carney,
Planning Director

Approved by:

Blair King
Manager

ATTACHMENT:

1. City Council Resolution, dated March 16, 1999.
2. Map

AILANTO PROPERTIES, INC.
ONE KAISER PLAZA / ORDWAY BUILDING / SUITE 1775
OAKLAND, CA 94612 • (510) 465-8888 • FAX (510) 465-5704

January 26, 1999

Via mail & Fax @ (650) 726-9389

Mr. Blair King, City Manager
City of Half Moon Bay
501 Main Street
Half Moon Bay, CA 94019

Re: Pacific Ridge at Half Moon Bay

Dear Blair:

This letter is in response to Mayor Donovan's desire to appoint a subcommittee on January 24, 1999. Ailanto requested such a subcommittee on December, 30, 1998 and was denied this request in the City Council meeting of January 5, 1999. Nevertheless, while we are less optimistic based on the City Council meetings to date, we still believe such meetings would be in the interest of both Ailanto and the City.

We would agree to meet with this subcommittee with the following understanding and ground-rules established:

1) Such meetings would not be held for the purpose of renegotiating the basic underlying project approvals obtained in 1990. As discussed in the January 24, 1999 Council Meeting, the purpose of these subcommittee meetings would be to generate a resolution with conditions of approval that would be acceptable to both Ailanto and the City pertaining to our CDP appeal.

2) Regardless of the progress achieved, the subcommittee meetings would conclude no later than February 25, 1999, with the goal of voting on the CDP appeal no later than the regularly scheduled Council Meeting of March 2, 1999. We will object to any extensions beyond that date.

3) The City will prepare an agenda and a list of proposals to be discussed before these meetings to enhance the productivity of the subcommittee.

Please provide us with several dates and suggested times that this subcommittee would be available to meet between now and February 25th and give me a call at your earliest convenience. Steve Cassidy and I will be representing Ailanto in these meetings. Thank you in advance for your assistance.

Sincerely,

Robert Henry

Robert Henry
Construction Manager

cc: Mayor Jerry Donovan
City Attorney, John Truxaw

BUSINESS OF THE COUNCIL OF THE CITY OF HALF MOON BAY

AGENDA REPORT

For meeting of: January 5, 1999

TO: Honorable Mayor and Council

FROM: Blair King, City Manager

TITLE: Appointment of an ad hoc subcommittee to negotiate with Ailanto Properties concerning Pacific Ridge Subdivision.

RECOMMENDATION:

Appointment by the Mayor of two members of the City Council, the chair of the Planning Commission, City Attorney, City Manager, and any other staff as deemed appropriate by the Manager to an ad hoc subcommittee for the purpose of discussions and negotiations with Ailanto Properties concerning the Pacific Ridge Subdivision.

FISCAL IMPACTS:

The fiscal impact of this recommendation has not been assessed.

BACKGROUND:

Attached is a letter from Ailanto Properties, Inc. indicating a willingness to engage in discussion or negotiations for the purpose of resolving issues associated with the issuance of the Coastal Development Permit for the Pacific Ridge Subdivision. The Manager feels that it is in the best interest of the City to pursue discussion and negotiate rather than litigate.

Although Mr. Henry suggests a time for a subcommittee to meet, staff recommends that meeting times be arranged between the subcommittee and the applicant, not at tonight's meeting.

A public hearing to consider the Pacific Ridge matter has been noticed for January 12, 1999. Any actions to continue the public hearing will require that it be opened, and if the Council so desires, continued to a date certain.

Prepared by:

Blair King
City Manager

Attachments: Ailanto Properties letter

Copies: Robert Henry

file:cm_strep/01/5/99

ILANTO PROPERT' , INC.
ONE KAISER PLAZA / ORDWAY BUILDING / SUITE 1775
OAKLAND, CA 94612 • (510) 465-8888 • FAX (510) 465-5704

December 30, 1998

Via Mail & Fax @ (650) 726-9389

Mr. Blair King, City Manager
City of Half Moon Bay
501 Main Street, P.O. Box 338
Half Moon Bay, CA 94019-0338

Re: Pacific Ridge at Half Moon Bay

Dear Blair:

I believe it is in the interest of both Ailanto Properties and the City to have a meeting with a subcommittee of the City Council. We propose that the meeting include two Council members, the chair of the Planning Commission, the City Attorney, appropriate Planning Department personnel and yourself to meet with Ailanto representatives, their attorney and appropriate consultants. The purpose of the subcommittee meeting would be to work out a resolution pertaining to our CDP appeal that may be acceptable to both Ailanto Properties and the City. Given the possibility of litigation, any discussions during such a meeting would be protected by normal evidentiary privileges that apply to settlement discussions. If this is acceptable to the City, we believe that it would be productive and meaningful to continue our scheduled CDP hearing before the Council from January 12th to January 26th to allow time for this to take place. We further propose that the subcommittee meeting take place on the evening of January 12, 1999 since this date has already been marked on the calendars of those needing to attend. We remain committed to finding reasonable common ground to obtain our Coastal Development Permits.

Sincerely,

Robert Henry

Robert Henry
Construction Manager

cc: Steve Cassidy

MEYERS, NAVE, RIBACK, SILVER & WILSON
A PROFESSIONAL LAW CORPORATION

GATEWAY PLAZA
777 DAVIS STREET, SUITE 300
SAN LEANDRO, CALIFORNIA 94577
TELEPHONE: (510) 351-4300
FACSIMILE: (510) 351-4481

MICHAEL R. NAVE
STEVEN R. MEYERS
ELIZABETH H. SILVER
MICHAEL S. RIBACK
KENNETH A. WILSON
DAVID W. SKINNER
STEVEN T. MATTAS
MICHAEL F. RODRIQUEZ
CLIFFORD F. CAMPBELL
RICK W. JARVIS
KATHLEEN FAUBION, AICP
ARNE B. SANDBERG
BENJAMIN P. FAY
DANIEL A. MULLER
LIANE M. RANDOLPH
PATRICK WHITNELL
KATHARINE G. WELLMAN
JOHN W. TRUXAW
GARY A. WATT
JULIE L. HARRYMAN
ADAM U. LINDGREN
DIANE B. ROLEN
CLAIRE S. BARDOS
KEVIN R. BRODEHL
JULIA L. BOND
KATHY E. MOUNT
BERNADETTE S. CURRY

OF COUNSEL
ANDREA J. SALTZMAN
CERTIFIED APPELLATE SPECIALIST
STEFANIE Y. GANDOLFI

NORTH BAY OFFICE
555 FIFTH STREET, SUITE 230
SANTA ROSA, CA 95401
TELEPHONE: (707) 545-8009
FACSIMILE: (707) 545-6817

CENTRAL VALLEY OFFICE
5260 CLAREMONT AVENUE
STOCKTON, CA 95207
TELEPHONE: (209) 951-4080
FACSIMILE: (209) 951-3009

February 10, 1999

Reply To:
San Leandro

Stephen K. Cassidy
Cassidy, Cheatham, Shimko & Dawson
20 California Street, Suite 500
San Francisco CA 94111

Re: Pacific Ridge

Dear Steve:

Consistent with the desires of both Ailanto Properties, Inc., and the City of Half Moon Bay City Council, and with the knowledge that Ailanto Properties, Inc., both on its own behalf and acting through counsel has threatened the City with litigation arising out of the City of Half Moon Bay's consideration of Ailanto Properties application for a CDP for its Pacific Ridge project, the parties have agreed to meet to attempt to negotiate, in the words of your client "a resolution pertaining to [the] CDP appeal that may be acceptable to both Ailanto Properties and the City." During these negotiations, the City Council will be represented by a subcommittee of the Council, Councilmembers, Deborah Ruddock and Councilmember Betty Stone, by City Manager Blair King and City Attorney John Truxaw. Ailanto Properties will be represented by Bob Henry, Adrian Tissler and yourself.

Inasmuch as the purpose of the meeting is to negotiate a solution to or resolution of any potential litigation pertaining to this matter, any statements made during these negotiations by representatives of the City of Half Moon Bay or by representatives of Ailanto Properties, Inc., are inadmissable offers to compromise as defined in Evidence

Code section 1152 and Federal Rules of Evidence section 408.

Very truly yours,

MEYERS, NAVE, RIBACK, SILVER & WILSON

John W. Truxaw

JWT:kag

Agreed:

Steven K. Cassidy

J:\WPD\MNRSW\465\01\LTR\FEB99\CASSIDY.010