CALIFORNIA COASTAL COMMISSION
South Coast Area Office
200 Oceangate, Suite 1000
Long Beach, CA 90802-4302
(562) 590-5071

TH 10b

Filed:	March 21, 2005
49th Day:	May 9, 2005
180th Day:	September 17, 2005 (Extended 90-Days)
270th Day:	December 16, 2005
Staff:	FSY-LB
Staff Report:	September 22, 2005
Hearing Date:	October 12-14, 2005
Commission Action:	

STAFF REPORT: REGULAR CALENDAR

APPLICATION NO.: 5-04-416

APPLICANT: California Department of Parks and Recreation, Attn: Chris Peregrin

PROJECT LOCATION: Doheny State Beach, City of Dana Point (County of Orange)

PROJECT DESCRIPTION: Demolition of an existing two-story, 19' tall, 470 square foot lifeguard tower and construction of a new, one-story, 14'-4" tall, 2,733 square foot lifeguard station with a three-story, 37'-9" tall, lifeguard tower. In addition, the following site improvements are proposed: vehicle staging/response ramp, vehicle wash station, extension of underground utilities, landscaping, and exterior lighting. Grading will consist of 400 cubic yards of import and 800 cubic yards or recompaction.

SUMMARY OF STAFF RECOMMENDATION:

The California Department of Parks and Recreation proposes to demolish and replace a lifeguard station at Doheny State Beach. The primary issues before the Commission are public access, hazards, water quality and scenic resources.

Staff recommends that the Commission **APPROVE** the proposed projects subject to **Nine (9) Special Conditions**. The **Special Conditions** require: **1)** submittal of a final staging area plan; **2)** timing of construction outside the peak beach use season; **3)** geotechnical conformance, **4)** assumption of risk; **5)** no future shoreline protective device; **6)** adherence to construction best management practices; **7)** debris disposal site to be located outside of coastal zone; **8)** submittal of a water quality management plan; and **9)** submittal of landscape plan.

The proposed development is taking place at Doheny State Beach in the City of Dana Point, which is a certified area under the Dana Point Specific Plan/Local Coastal Program. However, the proposed development is located upon filled tidelands. Therefore, the development is within the Commission's original permit jurisdiction under Coastal Act Section 30519(b) and must be evaluated for consistency with the Chapter 3 policies of the Coastal Act. The policies of the certified Dana Point LCP may be used for guidance.

SUBSTANTIVE FILE DOCUMENTS: Letter to California Department of Parks and Recreation from Commission staff dated November 24, 2004; Letter from California Department of Parks and Recreation to Commission staff dated March 16, 2005; *Geotechnical Evaluation Lifeguard Headquarters and Visitor Center Doheny State Beach Dana Point, CA (Project No. 205974001)* prepared by Ninyo and Moore Geotechnical and Environmental Consultants dated November 24, 2004; *Coastal Processes and Hydraulic/Hydrology Studies for Doheny State Beach (CE Reference No. 04-14)* prepared by Coast Environments dated December 13, 2004; Letter to California Department of Parks and Recreation from Commission staff dated May 1, 2005; November 24, 2004; and Letter from California Department of Parks and Recreation from Commission staff received September 9, 2005.

EXHIBITS:

1. Vicinity Map
2. Site Plan
3. Floor Plans/Roof Plan
4. Section Plans
5. Elevation Plans

STAFF RECOMMENDATION:

Staff recommends that the Commission adopt the following motion and resolution:

MOTION:

"I move that the Commission approve Coastal Development Permit No. 5-04-416 pursuant to the staff recommendation."

Staff recommends a **YES** vote. Passage of this motion will result in approval of the permit as conditioned and adoption of the following resolution and findings. The motion passes only by affirmative vote of a majority of the Commissioners present.

I. APPROVAL WITH CONDITIONS

The Commission hereby approves a coastal development permit for the proposed development and adopts the findings set forth below on grounds that the development as conditioned, located between the first public road and the sea, will be in conformity with the policies of Chapter 3 of the Coastal Act and will not prejudice the ability of the local government having jurisdiction over the area to prepare a Local Coastal Program conforming to the provisions of Chapter 3. Approval of the permit complies with the California Environmental Quality Act because either 1) feasible mitigation measures and/or alternatives have been incorporated to substantially lessen any significant adverse effects of the development on the environment, or 2) there are no further feasible mitigation measures or alternatives that would substantially lessen any significant adverse impacts of the development on the environment.

II. STANDARD CONDITIONS

1. Notice of Receipt and Acknowledgment. The permit is not valid and development shall not commence until a copy of the permit, signed by the permittee or authorized agent, acknowledging receipt of the permit and acceptance of the terms and conditions, is returned to the Commission office.

2. Expiration. If development has not commenced, the permit will expire two years from the date this permit is reported to the Commission. Development shall be pursued in a diligent manner and completed in a reasonable period of time. Application for extension of the permit must be made prior to the expiration date.

3. Interpretation. Any questions of intent or interpretation of any condition will be resolved by the Executive Director or the Commission.

4. Assignment. The permit may be assigned to any qualified person, provided assignee files with the Commission an affidavit accepting all terms and conditions of the permit.

5. Terms and Conditions Run with the Land. These terms and conditions shall be perpetual, and it is the intention of the Commission and the permittee to bind all future owners and possessors of the subject property to the terms and conditions.

III. SPECIAL CONDITIONS

1. STAGING AREA FOR CONSTRUCTION

A. **PRIOR TO ISSUANCE OF THE COASTAL DEVELOPMENT PERMIT**, the permittee shall submit a final plan for the review and approval of the Executive Director which indicates that the construction staging area(s) and construction corridor(s) will minimize public access impacts to Doheny State Beach.

(1) The plan shall demonstrate that:

(a) Construction equipment, materials or activity shall not occur outside the staging area and construction corridor identified on the site plan required by this condition; and

(b) Construction equipment, materials, or activity shall not be placed on the sandy beach outside of the immediate construction zone or grass area; and

(c) The construction staging area will gradually be reduced as less materials and equipment are necessary; and

(d) The construction access route will only be intermittently closed for transport of equipment and materials. When not in use for

transportation of equipment and materials, it will be made available for undisrupted public access.

(2) The plan shall include, at a minimum, the following components:

(a) A site plan that depicts:

1. limits of the staging area(s);
2. construction corridor(s);
3. construction site;
4. location of construction fencing and temporary job trailers with respect to the existing parking lot, day use area and the sandy beach.

B. The permittee shall undertake development in accordance with the approved final plans. Any proposed changes to the approved final plans shall be reported to the Executive Director. No changes to the approved final plans shall occur without a Commission amendment to this coastal development permit unless the Executive Director determines that no amendment is required.

2. <u>Timing of Construction</u>

By acceptance of this permit, the applicant agrees to minimize adverse impacts to public use of Doheny State Beach resulting from construction activities approved pursuant to Coastal Development Permit No. 5-04-416, as required below:

No construction shall occur during the "peak use" beach season, defined as the period starting the day before the Memorial Day weekend and ending the day after the Labor Day weekend of any year.

3. <u>Conformance with Geotechnical Report</u>

A. All final design and construction plans, including foundation, grading and drainage plans, shall be consistent with all recommendations contained in the following geotechnical report: *Geotechnical Evaluation Lifeguard Headquarters and Visitor Center Doheny State Beach Dana Point, CA (Project No. 205974001)* prepared by Ninyo and Moore Geotechnical and Environmental Consultants dated November 24, 2004.

B. **PRIOR TO THE ISSUANCE OF THE COASTAL DEVELOPMENT PERMIT,** the applicant shall submit, for the Executive Director's review and approval, evidence that an appropriately licensed professional has reviewed and approved all final design and construction plans and certified that each of those final plans is consistent with all of the recommendations specified in the above-referenced geologic evaluation approved by the California Coastal Commission for the project site.

C. The permittee shall undertake development in accordance with the approved final plans. Any proposed changes to the approved final plans shall be reported to the Executive Director. No changes to the approved final plans shall occur without a Commission amendment to this coastal development permit unless the Executive Director determines that no amendment is required.

4. <u>Assumption of Risk, Waiver of Liability and Indemnity</u>

A. By acceptance of this permit, the applicant acknowledges and agrees (i) that the site may be subject to hazards from liquefaction, flooding, and/or wave uprush; (ii) to assume the risks to the applicant and the property that is the subject of this permit of injury and damage from such hazards in connection with this permitted development; (iii) to unconditionally waive any claim of damage or liability against the Commission, its officers, agents, and employees for injury or damage from such hazards; and (iv) to indemnify and hold harmless the Commission, its officers, agents, and employees with respect to the Commission's approval of the project against any and all liability, claims, demands, damages, costs (including costs and fees incurred in defense of such claims), expenses, and amounts paid in settlement arising from any injury or damage due to such hazards.

B. Prior to any conveyance of the property that is the subject of this coastal development permit, the landowner shall execute and record a deed restriction, in a form and content acceptable to the Executive Director incorporating all of the above terms of subsection (A) of this condition. The restriction shall include a legal description of the applicant's entire parcel. The deed restriction shall run with the land, binding all successors and assigns, and shall be recorded free of prior liens that the Executive Director determines may affect the enforceability of the restriction. This deed restriction shall not be removed or changed without a Commission amendment to this coastal development permit.

C. **PRIOR TO ISSUANCE OF THE COASTAL DEVELOPMENT PERMIT**, the applicant shall submit a written agreement in a form and content acceptable to the Executive Director, incorporating all of the above terms of this condition.

5. <u>No Future Shoreline Protective Device</u>

A(1). By acceptance of this permit, the applicant agrees, on behalf of itself and all other successors and assigns, that no new shoreline protective device(s) or enhancement of the existing protective device shall ever be constructed to protect the development approved pursuant to Coastal Development Permit No. 5-04-416 in the event that the development is threatened with damage or destruction from waves, erosion, storm conditions or other hazards in the future. By acceptance of this permit, the applicant hereby waives, on behalf of itself and all successors and assigns, any rights to construct such devices that may exist under Public Resources Code Section 30235.

A(2). By acceptance of this permit, the applicant further agrees, on behalf of itself and all successors and assigns, that the applicant shall remove the development authorized by this permit if any government agency has ordered that the structure is not to be utilized due to any of the hazards identified above. In the event that portions of the development fall to the beach before they are removed, the applicant shall remove all recoverable debris associated with the development from the beach and ocean and lawfully dispose of the material in an approved disposal site. Such removal shall require a coastal development permit.

B. Prior to any conveyance of the property that is the subject of this coastal development permit, the landowner shall execute and record a deed restriction, in a form and content acceptable to the Executive Director incorporating all of the above terms of subsection (A) of this condition. The restriction shall include a legal description of the applicant's entire parcel. The deed restriction shall run with the land, binding all successors and assigns, and shall be recorded free of prior liens that the Executive Director determines may affect the enforceability of the restriction. This deed restriction shall not be removed or changed without a Commission amendment to this coastal development permit.

C. **PRIOR TO ISSUANCE OF THE COASTAL DEVELOPMENT PERMIT**, the applicant shall submit a written agreement in a form and content acceptable to the Executive Director, incorporating all of the above terms of this condition.

6. **Storage of Construction Materials, Mechanized Equipment and Removal of Construction Debris**

The permittee shall comply with the following construction-related requirements:

A. No construction materials, debris, or waste shall be placed or stored where it may enter a storm drain or be subject to wave erosion and dispersion;

B. Any and all debris resulting from construction activities shall be removed from the project site within 24 hours of completion of construction;

C. Best Management Practices (BMPs) and Good Housekeeping Practices (GHPs) designed to prevent spillage and/or runoff of construction-related materials, and to contain sediment or contaminants associated with construction activity, shall be implemented prior to the on-set of such activity. BMPs and GHPs which shall be implemented include, but are not limited to: stormdrain inlets must be protected with sandbags or berms, all stockpiles must be covered, and a pre-construction meeting should be held for all personnel to review procedural and BMP/GHP guidelines. Selected BMPs shall be maintained in a functional condition throughout the duration of the project.

D. Construction debris and sediment shall be properly contained and secured on site with BMPs, to prevent the unintended transport of sediment and other debris into coastal waters by wind, rain or tracking. Construction debris and sediment shall be removed from construction areas as necessary to prevent the accumulation of sediment and other debris which may be discharged into coastal waters. Debris shall be disposed at a debris disposal site outside the coastal zone, pursuant to **Special Condition No. 7**.

7. Location of Debris Disposal Site

The applicant shall dispose of all demolition and construction debris resulting from the proposed project at an appropriate location. If the disposal site is located within the coastal zone, a coastal development permit or an amendment to this permit shall be required before disposal can take place.

8. Water Quality Management Plan (WQMP)

A. **PRIOR TO ISSUANCE OF THE COASTAL DEVELOPMENT PERMIT**, the permittee shall submit for the review and approval of the Executive Director, two (2) copies of a Final Water Quality Management Plan (WQMP) for the post-construction project site, prepared by a licensed water quality professional, and shall include plans, descriptions, and supporting calculations. The WQMP shall incorporate structural and non-structural Best Management Practices (BMPs) designed to reduce, to the maximum extent practicable, the volume, velocity and pollutant load of stormwater and dry weather flows leaving the developed site. In addition to the specifications above, the plan shall be in substantial conformance with the following requirements:

(1) Appropriate structural and non-structural BMPs (site design, source control and treatment control) shall be designed and implemented to minimize water quality impacts to surrounding coastal waters;

(2) Impervious surfaces, especially directly connected impervious areas, shall be minimized, and alternative types of pervious pavement shall be used where feasible;

(3) Irrigation and the use of fertilizers and other landscaping chemicals shall be minimized;

(4) Trash, recycling and other waste containers, as necessary, shall be provided. All waste containers anywhere within the development shall be covered, watertight, and designed to resist scavenging animals.

(5) All runoff from the vehicle wash station shall be collected through the proposed wash rack and sand/oil separator and discharged only through the sewer system.

(6) Runoff from all roofs, walkways, driveway and parking areas shall be collected and directed through a system of structural BMPs including vegetated areas and/or gravel filter strips or other vegetated or media filter devices. The system of BMPs shall be designed to 1) trap sediment, particulates and other solids and 2) remove or mitigate contaminants (including trash, debris and vehicular fluids) through infiltration, filtration and/or biological uptake. The drainage system shall also be designed to convey and discharge runoff from the developed site in a non-erosive manner;

(7) Post-construction structural BMPs (or suites of BMPs) shall be designed to treat, infiltrate or filter the amount of stormwater runoff produced by all storms up to and including the 85th percentile, 24-hour storm event for volume-based BMPs, and/or the 85th percentile, 1-hour storm event, with an appropriate safety factor (i.e., 2 or greater), for flow-based BMPs;

(8) All BMPs shall be operated, monitored, and maintained for the life of the project and at a minimum, all structural BMPs shall be inspected, cleaned-out, and where necessary, repaired at the following minimum frequencies: (1) prior to October 15th each year; (2) during each month between October 15th and April 15th of each year and, (3) at least twice during the dry season;

(9) Debris and other water pollutants removed from structural BMP(s) during clean-out shall be contained and disposed of in a proper manner;

(10) It is the permittee's responsibility to maintain the drainage system and the associated structures and BMPs according to manufacturer's specifications.

B. The permittee shall undertake development in accordance with the approved final plans. Any proposed changes to the approved final plans shall be reported to the Executive Director. No changes to the approved final plans shall occur without a Commission amendment to this coastal development permit unless the Executive Director determines that no amendment is required.

9. **<u>Landscaping Plan</u>**

A. **PRIOR TO ISSUANCE OF THE COASTAL DEVELOPMENT PERMIT**, the applicant shall submit, for the review and approval of the Executive Director, a final landscape plan prepared by a licensed landscape architect that includes the following:

(1) The plan shall demonstrate that:

(a) All required plantings will be maintained in good growing conditions throughout the life of the project, and whenever necessary, shall be replaced with new plant materials to ensure continued compliance with the landscape plan.

(b) No plant species listed as problematic and/or invasive by the California Native Plant Society, the California Exotic Pest Plant Council, or as may be identified from time to time by the State of California shall be employed or allowed to naturalize or persist on the site. No plant species listed as a 'noxious weed' by the State of California or the U.S. Federal Government shall be utilized within the property. Use of primarily native plant species is encouraged.

(2) The plan shall include, at a minimum, the following components:

(a) Two (2) full size copies of a map showing the type, size, and location of all plant materials that will be on the developed site, the irrigation system, topography of the developed site, and all other landscape features, and

(b) A schedule for installation of plants.

B. The permittee shall undertake development in accordance with the approved plan. Any proposed changes to the approved final plan shall be reported to the Executive Director. No changes to the approved final plans shall occur without a Commission amendment to this coastal development permit unless the Executive Director determines that no amendment is required.

IV. FINDINGS AND DECLARATIONS

The Commission hereby finds and declares as follows:

A. PROJECT LOCATION AND DESCRIPTION

Doheny State Beach is located at the mouth of San Juan Creek and became a State Park in 1931 and is administered by the California Department of Parks and Recreation (Exhibit #1-2). Doheny State Beach is actually two parks in one. South of San Juan Creek is a camping area and north of San Juan Creek is a day use area. The project site is located at the day use area of Doheny State Beach near San Juan Creek. There is an existing lifeguard station on site, but it will be demolished to make room for the new proposed lifeguard station. The new lifeguard station will be built approximately 5-feet south (oceanward) of the existing station, which is approximately 260 feet from the shoreline. At the mouth of San Juan Creek, a natural beach sand berm often blocks the creek from entering the ocean from late spring to late fall. The buildup of water occasionally breaks this berm. A jetty made of concrete and rebar, known as "Thor's Hammer," was constructed at the west side of San Juan Creek to prevent erosion of the adjacent beach, which is near the project site. A regional bike path is located along the west side of San Juan Creek.

The project includes demolition of an existing, two-story, 19' tall, 470 square foot lifeguard tower and construction of a new, one-story, 14'-4" tall, 2,733 square foot lifeguard station with a, 37'-9" tall, three-story, lifeguard tower (Exhibit #3-5). The square footage of the new station/tower is broken down as follows: 1,304 square foot 1st floor garage, 953 square foot 1st floor enclosed area, 373 square foot 2nd floor for the tower, 373 square foot 3rd floor for the tower with a 467 square foot deck. The facility will include: lifeguard offices with work/reporting areas, space for lifeguard training, first aid area, kitchen, unisex restroom, unisex locker room with private shower/changing areas, equipment storage, garage for two (2) lifeguard vehicles (tandem parked) and two (2) watercraft trailers and associated mechanical/equipment rooms. The three-story lifeguard tower will house an office on the 1st floor and 2nd floor and the 3rd floor will provide an observation room and a deck offering 360 degrees of observation. The foundation of the building will consist of slab on grade. In addition, the following site improvements are proposed: an approximate 20' x 35' vehicle staging/response ramp to the beach, an approximate 10' x 20' vehicle wash station, extension of underground utilities, seating wall, landscaping, and exterior lighting. Grading will consist of 400 cubic yards of import and 800 cubic yards of recompaction.

Work is anticipated to begin in September 2006 and will take approximately nine (9) months to complete construction.

B. PUBLIC ACCESS

Section 30211 of the Coastal Act states:

> *Development shall not interfere with the public's right of access to the sea where acquired through use or legislative authorization, including, but not limited to, the use of dry sand and rocky coastal beaches to the first line of terrestrial vegetation.*

Section 30252 of the Coastal Act states in relevant part:

> *The location and amount of new development should maintain and enhance public access to the coast by...*
>
> > *(4) providing adequate parking facilities or providing substitute means of serving the development with public transportation.*

The proposed project involves the demolition and replacement of a lifeguard station at Doheny State Beach. The State Beach is a popular attraction to both residents and visitors. As stated before, Doheny State Beach is actually two parks in one. South of San Juan Creek is a camping area and north of San Juan Creek is a day use area. The project site is located at the day use area of Doheny State Beach near San Juan Creek. The project site currently offers a five-acre lawn area, picnic facilities, a sandy beach, restrooms, volleyball courts, food concessions, and showers. The same amenities will be available after project implementation, in addition to the new lifeguard station.

The Coastal Act requires that development not interfere with the public's right of access to the sea by providing adequate parking to serve that development. An existing 693 space parking lot for the beach use exists on site. The proposed project will not impact this

existing parking lot. The existing lifeguard station accommodates three (3) lifeguard vehicles. The new lifeguard station will accommodate six (6) lifeguard vehicles (two (2) tandem spaces in the garage and four (4) available spaces located on the project site). This parking is adequate for the proposed use of the building. In addition, no public parking is currently available at this facility nor would it be available in the future. Thus, adequate parking will be maintained on site.

The applicant states that work is anticipated to begin in September 2006 and will take approximately nine (9) months to complete construction, which would be May 2007. The project will take place primarily during the winter and early spring season when there are fewer visitors to the beach, which will further reduce any adverse impacts to public access. Furthermore, the applicant states that public access will not be eliminated during construction. The applicant has submitted a preliminary construction staging plan showing how public access will not be hindered by the proposed project. An area consisting of forty-five (45) parking spaces in the public parking lot north of the project site will serve as the construction staging area. A construction access route leading from the staging area to the project site will cross through a paved area of the park area. This access route will only be intermittently used, so that public access will still be available when not being used to transport equipment and material between sties. In addition, the construction staging area will be gradually collapsed as less materials and equipment are needed. Thus, in order to ensure access to the beach is protected during the peak summer season and that public access is not hindered during construction, the Commission finds that it is necessary to impose **Special Condition No. 1** and **Special Condition No. 2**. **Special Condition No. 1** requires the applicant to submit a final construction staging plan. **Special Condition No.2** prohibits construction from occurring during the peak use summer season and thus maintain unimpeded public access to the beach. Only as conditioned does the Commission find the proposed development is consistent with Sections 30211 and 30252 of the Coastal Act.

C. VISITOR SERVING DEVELOPMENT

Section 30213 of the Coastal Act states in part:

> *Lower cost visitor and recreational facilities shall be protected, encouraged, and, where feasible, provided. Developments providing public recreational opportunities are preferred.*

Public beaches constitute a lower cost visitor-serving facility. As such, any development on a public beach is subject to scrutiny as to whether the development would affect the public's recreational interest. In this case, the proposed project will not adversely impact public access or recreation. The proposed project will enhance public safety of the beach by improving the lifeguard's ability to respond to rescues. The beach will remain open and available to visitors during construction and will be completed prior to the peak beach use season, as discussed in the preceding section. Therefore, the Commission finds that the proposed development is consistent with the provisions of Section 30213 of the Coastal Act.

D. GEOLOGY AND COASTAL HAZARDS

Section 30235 of the Coastal Act states, in pertinent part:

> *Revetments, breakwaters, groins, harbor channels, seawalls, cliff retaining walls, and other such construction that alters natural shoreline processes shall be permitted when required to serve coastal-dependent uses or to protect existing structures or public beaches in danger from erosion, and when designed to eliminate or mitigate adverse impacts on local shoreline sand supply.*

Section 30253 of the Coastal Act states in relevant part:

> *New development shall:*
>
> *(1) Minimize risks to life and property in areas of high geologic, flood, and fire hazard.*
>
> *(2) Assure stability and structural integrity, and neither create nor contribute significantly to erosion, geologic instability, or destruction of the site or surrounding area or in any way require the construction of protective devices that would substantially alter natural landforms along bluffs and cliffs.*

1. Geology

To assess the geologic feasibility of the project, the applicant submitted the following report: *Geotechnical Evaluation Lifeguard Headquarters and Visitor Center Doheny State Beach Dana Point, CA (Project No. 205974001)* prepared by Ninyo and Moore Geotechnical and Environmental Consultants dated November 24, 2004. The purpose of the study was to evaluate the geological conditions and geotechnical characteristics of the on-site soils, and to provide geotechnical recommendations and design parameters for the proposed project. The report concluded that based on their evaluation, the proposed project was feasible from a geotechnical standpoint provided that the recommendations presented in the report were incorporated into the design and construction of the project. Some of the conclusions made in the study were: overexcavation of the project site would be necessary; construction of a slab on grade foundation system, no known active faults or landslides directly underly the site; and the site is located in an area mapped as potentially liquefiable.

In order to assure that risks are minimized, the geotechnical consultant's final recommendations must be incorporated into the design of the project. Therefore, the Commission imposes **Special Condition No. 3**, which requires the applicant to submit, for the review and approval of the Executive Director, final design and construction plans reviewed and signed by the geotechnical consultant indicating that the recommendations contained in the geotechnical report have been incorporated into the design of the proposed project.

2. Coastal Hazards

To analyze the suitability of the site for development relative to potential wave hazards, the applicant has provided *Coastal Processes and Hydraulic/Hydrology Studies for Doheny State Beach (CE Reference No. 04-14)* prepared by Coast Environments dated December 13, 2004. The purpose of this analysis is to establish if risks of possible damage to the proposed lifeguard headquarters are expected due to coastal forces resulting from storm waves and/or flooding from San Juan Creek. The study determined that between 1984 and 2004 the beach has eroded by 40-feet. Although beach width on West Doheny Beach fluctuates, it maintains a minimum width of greater than 300-feet. A wave runup and overtopping analysis was done in this study and determined that there would be no significant wave runup or overtopping with two (2)- or five (5)- year return period design waves. Furthermore, ten (10) year or greater return period conditions could cause some level of damage. However, as long as the beach retains a minimum width greater than 300-feet, no significant damages can be expected. The study also claims that it is possible that larger storm waves than those considered in the study could occur, thus causing considerable runup, overtopping and damage. In addition, the study claims that waves smaller those considered in the study could cause damage. Nevertheless, the existing beach has survived several major storms while maintaining a minimum beach width of greater than 300-feet.

The potential adverse impacts associated with wave runup and overtopping was a major concern of Commission staff. Thus, Commission staff requested additional information regarding if future shoreline protection would be necessary in the future for the project site. The applicant responded by stating: "*The technical report Coastal Processes and Hydraulic/Hydrology Studies for Doheny State Beach, 2004 (Coastal Processes Report) assessed various parameters (e.g. waves, tides and sea levels, design wave storms and water levels, run-up and overtopping analysis) which were used by State Park design staff to configure the proposed improvements such that exposure from the combination of high tides and wave surges would be kept to an acceptable low level of risk. Due to the natural protection provided by a large sand berm (the overall width of the beach north of San Juan Creek >300'), in conjunction with the close proximity of San Juan Creek (the highest sand contributing watershed within the Oceanside littoral cell) which is expected to continue to supply a large amount of sand to this area, damage to the structure is not predicted. Albeit, per the conservative predictions for the 10 year and greater event, temporary protection, such as a low row of sandbags, could be needed at the perimeter of the concrete ramp and at the base of the graded building pad to keep water from lapping at the fringe of these features. However, observations made by Park staff in the late 1980's and early 1990's indicate the actual water level of the ten year event was lower than that predicted (the 10 year model incorporates empirical data from the peak winter storm cluster of 1988) in the above mentioned report. Given the history, and physical/dynamic characteristics of the site, it is the Department's position that permanent protection for the proposed improvements would be inappropriate.*" Commission staff also questioned why the new proposed lifeguard station was placed closer to the ocean than the previous lifeguard station. The applicant responded by stating that visibility from the existing tower was inadequate, especially at certain times of the year when the accumulation of the

natural sand berm limits the ability to have a view of the entire beach and water. The applicant states that this is a significant issue in the "off-season" when the majority of seasonal lifeguards are not in service and the primary guarding activity is largely conducted from the main tower.

The proposed project will occur on a sandy beach, as such, the project may be subject to liquefaction and wave uprush during high storm events. Development adjacent to the ocean is inherently risky. The applicant has stated that the lifeguard station would not necessitate protection from hazards such as flooding and/or wave attack now and the applicant is not proposing protection of the lifeguard station as part of the current application. Although the applicants' report indicates that the site is safe for development at this time, beach areas are dynamic environments, which may be subject to unforeseen changes. Such changes may affect beach processes and could result in the applicant proposing protection of the structure in the future. As discussed below, a protective device would result in adverse effects to coastal resources.

Shoreline protective devices can result in a number of adverse effects on the dynamic shoreline system and the public's ability to utilize the beach. First, shoreline protective devices can cause changes in the shoreline profile, particularly changes in the slope of the profile resulting from a reduced beach berm width. This may alter the usable area under public ownership. A beach that rests either temporarily or permanently at a steeper angle than under natural conditions will have less horizontal distance between the mean low water and mean high water lines. This reduces the actual area in which the public can pass on public property.

The second effect of a shoreline protective device on access is through a progressive loss of sand as shore material is not available to nourish the bar. The lack of an effective bar can allow such high wave energy on the shoreline that materials may be lost far offshore where it is no longer available to nourish the beach. A loss of area between the mean high water line and the actual water is a significant adverse impact on public access to the beach, as it results in less usable sandy beach area.

Third, shoreline protective devices such as revetments and bulkheads cumulatively affect shoreline sand supply and public access by causing accelerated and increased erosion on adjacent public beaches. This effect may not become clear until such devices are constructed individually along a shoreline and they reach a public beach. The Commission notes that if a seasonally eroded beach condition occurs with greater magnitude due to the placement of a shoreline protective device, then the subject beach would also accrete at a slower rate. The Commission also notes that many studies performed on both oscillating and eroding beaches have concluded that loss of beach occurs on both types of beaches where a shoreline protective device exists.

Fourth, if not sited in a landward location that ensures that the seawall is only acted upon during severe storm events, beach scour during the winter season will be accelerated because there is less beach area to dissipate the wave's energy. Finally, revetments, bulkheads, and seawalls interfere directly with public access by

their occupation of beach area that will not only be unavailable during high tide and severe storm events, but also potentially throughout the winter season.

Section 30253 (2) of the Coastal Act states that new development shall neither create nor contribute to erosion or geologic instability of the project site or surrounding area. Therefore, if the proposed beach improvements require a protective device in the future, it would be inconsistent with Section 30253 of the Coastal Act because such devices contribute to beach erosion.

To assure that no protective device will be constructed in the future to protect the proposed improvements, the Commission imposes **Special Conditions No. 4 and No. 5**. Since the proposed development is taking place adjacent to the ocean in an area that is potentially subject to liquefaction and wave uprush, the Commission is imposing its standard waiver of liability special condition (**Special Condition No. 4**). **Special Condition No. 5** requires that the applicant agree that no additional future shoreline protective device shall be constructed to protect the improvements. Through these two special conditions, the applicant is notified that the project site is in an area that is potentially subject to flooding and liquefaction which could damage the proposed improvements and that the improvements cannot be protected through a new shoreline protective device. The applicant is also notified that the Commission is not liable for such damage as a result of approving the permit for development. In addition, these conditions insure that any potential future owners of the property will be informed of the risks, the Commission's immunity from liability, and that future protection of these improvements through some form of shoreline protection work is not guaranteed nor is it likely to be supported.

CONCLUSION

Thus, only as conditioned for: conformance with geotechnical recommendations (**Special Condition No. 3**); assumption of risk (**Special Condition No. 4**); and no future shoreline protective device (**Special Condition No. 5**), does the Commission finds that the proposed project is consistent with Sections 30235 and 30253 of the Coastal Act.

E. WATER QUALITY AND MARINE RESOURCES

Section 30230 of the Coastal Act states:

> *Marine resources shall be maintained, enhanced, and where feasible, restored. Special protection shall be given to areas and species of special biological or economic significance. Uses of the marine environment shall be carried out in a manner that will sustain the biological productivity of coastal waters and that will maintain healthy populations of all species of marine organisms adequate for long-term commercial, recreational, scientific, and educational purposes.*

Section 30231 of the Coastal Act states:

> *The biological productivity and the quality of coastal waters, streams, wetlands, estuaries, and lakes appropriate to maintain optimum populations of marine organisms and for the protection of human health shall be maintained and, where*

feasible, restored through, among other means, minimizing adverse effects of waste water discharges and entrainment, controlling runoff, preventing depletion of ground water supplies and substantial interference with surface water flow, encouraging waste water reclamation, maintaining natural vegetation buffer areas that protect riparian habitats, and minimizing alteration of natural streams.

Section 30232 of the Coastal Act states:

Protection against the spillage of crude oil, gas, petroleum products, or hazardous substances shall be provided in relation to any development or transportation of such materials. Effective containment and cleanup facilities and procedures shall be provided for accidental spills that do occur.

1. **Construction Impacts to Water Quality**

Storage or placement of construction materials, debris, or waste in a location subject to erosion and dispersion or which may be discharged into coastal water via rain or wind would result in adverse impacts upon the marine environment that would reduce the biological productivity of coastal waters. For instance, construction debris entering coastal waters may cover and displace soft bottom habitat. Sediment discharged into coastal waters may cause turbidity, which can shade and reduce the productivity of foraging avian and marine species' ability to see food in the water column. In order to avoid adverse construction-related impacts upon marine resources, **Special Condition No. 6** outlines construction-related requirements to provide for the safe storage of construction materials and the safe disposal of construction debris. This condition requires the applicant to remove any and all debris resulting from construction activities within 24 hours of completion of the project. In addition, all soluble construction materials shall be covered and enclosed on all sides, and as far away from a storm drain inlet and receiving waters as possible. In order to prevent impacts to coastal waters, **Special Condition No. 7** requires that all demolition and cut material debris be disposed of at a legal site. Choice of a site within the coastal zone shall require an amendment to this permit or a new coastal development permit, unless the Executive Director determines that no amendment or new permit is legally required.

2. **Post-Construction Impacts to Water Quality**

The proposed development will result in urban runoff entering the storm water system. Pollutants such as sediments or toxic substances such as grease, motor oil, heavy metals, pesticides and fertilizers are often contained within urban runoff entering the storm water system. In this case, the site drains a new building and hardscape area. Therefore, the primary post-construction water quality concerns associated with the proposed project include grease, motor oil, heavy metals, trash, pesticides and fertilizer.

The proposed development would result in the discharge of storm water into the storm water conveyance system. As such, the amount of pollutants carried through the system would increase proportionally. Therefore, the project has the potential to affect the water quality of the coastal waters in Dana Point.

The proposed project is new development, which affords an opportunity to improve water quality. Much of the pollutants entering the ocean come from land-based development. The Commission finds that it is necessary to minimize to the extent feasible within its jurisdiction the cumulative adverse impacts on water quality resulting from incremental increases in impervious surface associated with additional development. Reductions in the amount of pollutants in the existing runoff would be one step to begin to reduce cumulative adverse impacts to coastal water quality. The currently proposed project drains a new building and hardscape area. As such, appropriate measures must be taken to assure that adverse affects on water quality are minimized. However, the applicant has not submitted any BMPs or methods to deal with water quality. The applicant states that the run-off from this project will primarily originate from the roof of the structure and localized areas of asphalt and concrete and is designed such that all run-off of this type will flow toward existing park facility drains. While no BMPs are proposed to deal with post construction impacts to water quality, the proposed project does include a wash rack for the State Park lifeguard vehicles. The wash rack system will separate sand/oil and will include a valve to keep rain water draining through this system. However, this does not remedy the fact that post-construction BMPs have not been proposed. Therefore, it is necessary to impose **Special Condition No. 8**, which requires that the applicant submit a Water Quality Management Plan (WQMP). The Water Quality Management Plan shall meet water quality goals such as use of appropriate structural and non-structural BMPs designed to treat, infiltrate, or filter the runoff from all surfaces and activities on the development site and that runoff from all roofs, parking areas, maintenance areas and driveways shall be collected and directed through a system of structural BMPs and/or gravel filter strips or other vegetated or media filter devices.

Any landscaping used on site should only consist of native or non-native drought tolerant plants, which are non-invasive. The placement of vegetation that is considered to be invasive which could supplant native vegetation should not be allowed. Invasive plants have the potential to overcome native plants and spread quickly. Invasive plants are generally those identified by the California Invasive Plant Council (http://www.caleppc.org/) and California Native Plant Society (www.CNPS.org) in their publications. Furthermore, any plants in the landscaping plan should be drought tolerant to minimize the use of water. The term drought tolerant is equivalent to the terms 'low water use' and 'ultra low water use' as defined and used by "A Guide to Estimating Irrigation Water Needs of Landscape Plantings in California" prepared by University of California Cooperative Extension and the California Department of Water Resources dated August 2000 available at http://www.owue.water.ca.gov/landscape/pubs/pubs.cfm. The applicant has submitted a landscape plan for the project site. However, the plan does not specifically list any proposed plants. It only states that sand dune plant material (native succulents, cacti and grasses), driftwood tree trunk and sand dune berming are proposed. Therefore, the Commission is imposing **Special Condition No. 9**, which requires submittal of a revised landscape plan, which only consists of native or non-native drought tolerant plants, which are non-invasive.

CONCLUSION

To minimize the adverse impacts upon the marine environment, **four (4) Special Conditions** have been imposed. **Special Condition No. 6** requires the applicant to adhere to construction-related requirements to provide for the safe storage of construction materials and the safe disposal of construction debris and also requires the applicant to incorporate Best Management Practices effective at mitigating pollutants of concern. **Special Condition No. 7** requires the applicant to dispose all demolition and construction debris at an appropriate location. **Special Condition No. 8** requires the applicant to submit a Water Quality Management Plan. **Special Condition No. 9** requires the applicant to submit a landscape plan, which only consists of native or non-native drought tolerant plants, which are non-invasive. Only as conditioned, the Commission finds that the proposed project is consistent with Section 30230, 30231 and 30232 of the Coastal Act.

F. SCENIC RESOURCES

Section 30251 of the Coastal Act states, in relevant part:

> *The scenic and visual qualities of coastal areas shall be considered and protected as a resource of public importance. Permitted development shall be sited and designed to protect views to and along the ocean and scenic coastal areas, to minimize the alteration of natural land forms, to be visually compatible with the character of surrounding areas, and, where feasible, to restore and enhance visual quality in visually degraded areas...*

The proposed project will occur at Doheny State Beach, a highly scenic area in Dana Point. The public visiting the State Beach is afforded views of open coastal waters, the horizon and sandy beach looking across the site and down coast, distant views of the inland hills and mountains, and the Dana Point Harbor up coast of the beach. The proposed structure would be located on the approximately 300 foot wide sandy beach seaward of existing paved and landscaped areas located at the back beach which are used for picnics, public parking, and support facilities for the campgrounds which are part of the State Beach.

The project involves the demolition of an existing 470 square foot, 19' tall, two-story lifeguard tower and construction of a new 2,733 square foot, 14'-4" tall, one-story, lifeguard station with a, 37'-9" tall, three-story, lifeguard tower. The proposed lifeguard station and tower have the potential to impact public views to and along the shoreline. The proposed building is sited slightly oceanward of the existing lifeguard tower and is the most oceanward building on the beach.

Commission staff questioned why the new lifeguard tower is taller than the existing. The applicant responded by stating that the height of the tower is dictated by the need for full visibility of Doheny State Beach. The existing tower fails to provide full view of the beach and its view can also be marred by the height of the existing natural beach berm. In addition, lifeguard staff was not included in discussion regarding how tall the existing lifeguard station should have been. Lifeguard staff has been included in discussions regarding the new station and thus have stated that the proposed height would provide them the best view to see up and down Doheny State Beach. Also, the applicant states that

the original design of the proposed lifeguard station was roughly 50% larger. Reduction or elimination of some program areas and the compromise to use space for multiple purposes (e.g. periodically clearing the equipment from the garage so it may double as a lifeguard training area) has resulted in the proposed project's reduced size.

Since the proposed garage component of the lifeguard station resulted in a majority of the massing of the building on the 1st floor, Commission staff questioned whether the size of the garage was necessary. The applicant states: "*The proposed garage will accommodate rescue vehicle, watercraft, and equipment. Rescue equipment needs to be kept secure and in immediate proximity to the ocean. Currently, equipment is stored closer to PCH and towed to and from existing tower on a daily basis. This is not ideal for public safety. Having all rescue equipment with direct access to the beach will greatly improve the lifeguard's response to rescues.*"

Commission staff also questioned why portable towers were not proposed instead of the proposed new permanent lifeguard station. Portable towers possibly may not result in a potential view impact like that associated with the proposed lifeguard station. The applicant responded by stating: "*Portable towers are used through the summer months and are a valuable addition to lifeguard facilities however, funding constraints are such that the number of year-round lifeguard staff is inadequate to operate these portable towers during the off-season. In the fall, winter, and spring months, when the lifeguard staff is at its lowest core-level, a centralized facility is needed that has full visibility of all beach and water to ensure the detection of any emergency and also direct un-impeded access to ensure a rapid response time. During the off-season, permanent Lifeguards are tasked with administrative duties (training, purchasing and hiring). These activities can be completed within the new tower while the lifeguard can simultaneously watch the water and respond, if necessary.*"

The proposed lifeguard station and tower is larger and more seaward of the existing lifeguard station on site. However, the proposed project does not significantly impact coastal views of the open coastal waters, the horizon and the approximately 2-mile long stretch of sandy beach. These views are still available on site. In addition, the height and massing of this structure is directly connected to the ability to provide public safety. The project has already been redesigned to serve multiple functions and be more compact, yet it is still capable of providing adequate service to the beach going public. Thus, since significant scenic views are still afforded on site, the Commission, as conditioned, finds the project consistent with Section 30251 of the Coastal Act.

G. LOCAL COASTAL PROGRAM

The proposed development is occurring at Doheny State Beach in the City of Dana Point. Doheny State Beach is a certified area under the Dana Point Specific Plan/Local Coastal Program. However, the proposed development is located upon filled tidelands. Therefore, the development is within the Commission's original permit jurisdiction under Coastal Act Section 30519(b) and must be evaluated for consistency with the Chapter 3 policies of the Coastal Act. The policies of the certified Dana Point LCP may be used for guidance.

H. CALIFORNIA ENVIRONMENTAL QUALITY ACT (CEQA)

Section 13096 of Title 14 of the California Code of Regulations requires Commission approval of Coastal Development Permits to be supported by a finding showing the permit, as conditioned by any conditions of approval, to be consistent with any applicable requirements of the California Environmental Quality Act (CEQA). Section 21080.5(d)(2)(A) of CEQA prohibits a proposed development from being approved if there are feasible alternatives or feasible mitigation measures available which would substantially lessen any significant adverse effect that the activity may have on the environment.

The proposed project has been conditioned in order to be found consistent with the public access, hazard, water quality and scenic resource policies of the Coastal Act. Mitigation measures, in the form of special conditions, require **1)** submittal of a final staging area plan; **2)** timing of construction outside the peak beach use season; **3)** geotechnical conformance, **4)** assumption of risk; **5)** no future shoreline protective device; **6)** construction best management practices; **7)** debris disposal site to be located outside of coastal zone; **8)** submittal of a water quality management plan; and **9)** submittal of landscape plan.

As conditioned, there are no feasible alternatives or feasible mitigation measures available which would substantially lessen any significant adverse effect that the activity may have on the environment. Therefore, the Commission finds that the proposed project can be found consistent with the requirements of the Coastal Act to conform to CEQA.

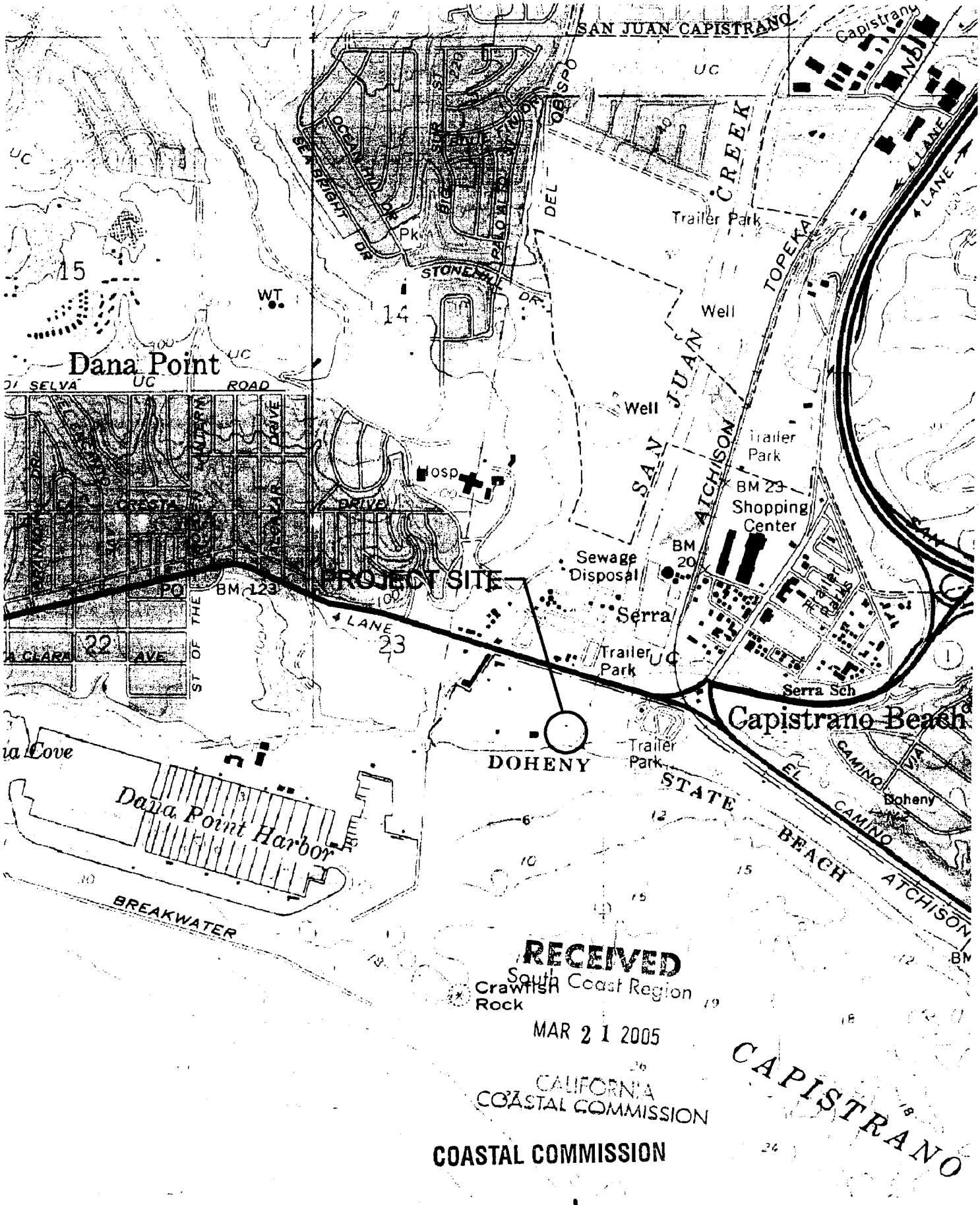

COASTAL COMMISSION

EXHIBIT # 1

PAGE 1 OF 1

VICINITY MAP

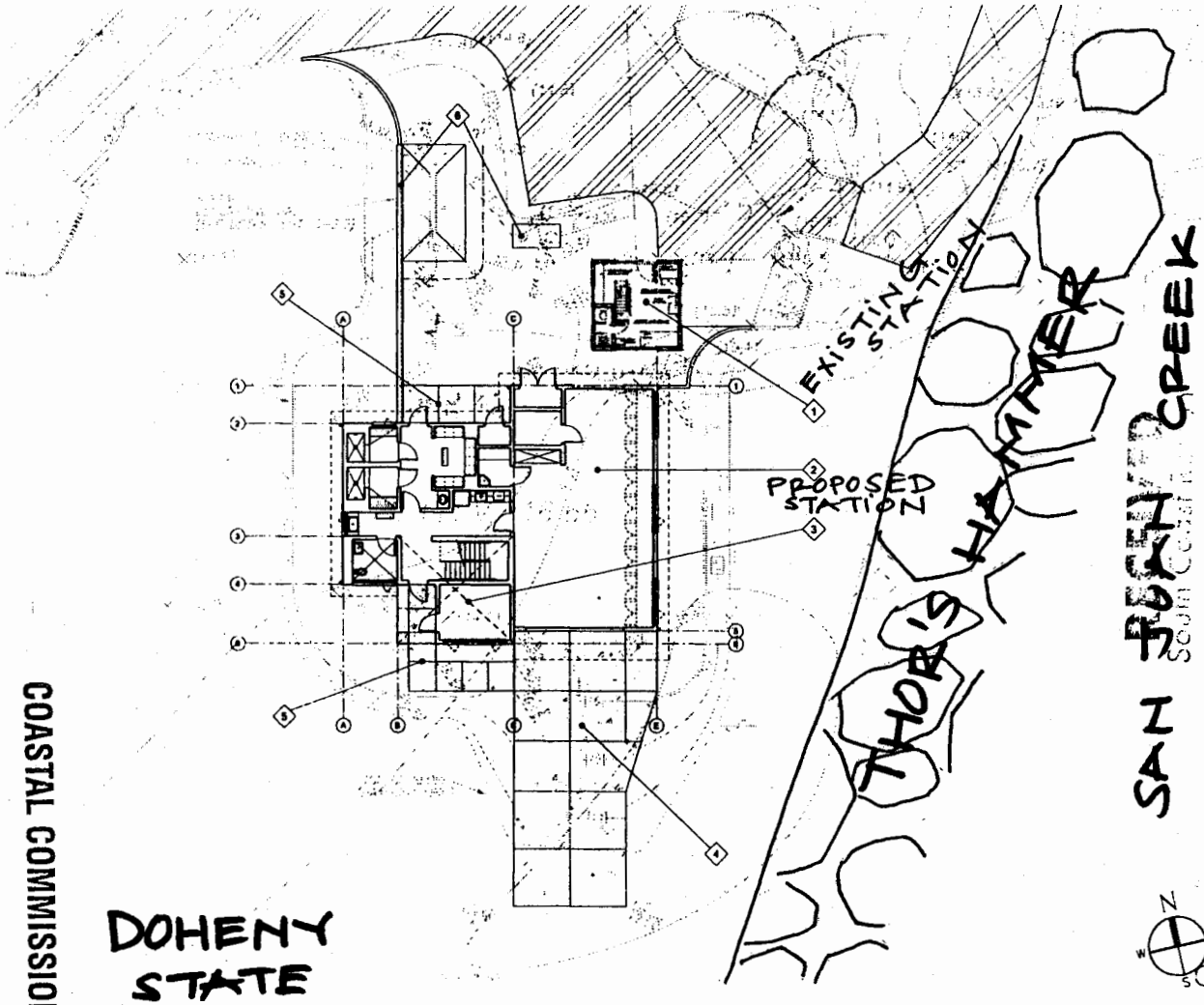

SITE PLAN COMPOSITE - EXISTING / PROPOSED BUILDINGS

SCALE 1" = 10'-0"

SHEET KEYNOTES

1. EXISTING LIFEGUARD TOWER (TO BE DEMOLISHED)
2. PROPOSED LIFEGUARD HEADQUARTERS
3. PROPOSED LIFEGUARD TOWER ABOVE
4. PROPOSED VEHICLE RAMP
5. PROPOSED WALKWAY
6. PROPOSED SITEWORK PER GRADING AND IMPROVEMENT PLAN

SOUTHERN SERVICE CENTER
8885 RIO SAN DIEGO DRIVE SUITE # 270
SAN DIEGO, CA 92108
PHONE 619 220-5380
FAX 619 220-5400

DESIGNED	
DRAWN	CS
CHECKED	
DATE	01/31/2005

COASTAL DEVELOPMENT PERMIT APPLICATION # 5-04-416

DSA/DPR MOU - 4.01 ACCESSIBILITY REVIEW

CERTIFICATION #

REVISIONS

DOHENY STATE BEACH
NEW LIFEGUARD HEADQUARTERS

SHEET TITLE
SITE PLAN COMPOSITE

PROJECT NUMBER
01310M

SHEET NO
A-1.1
OF

COASTAL COMMISSION
EXHIBIT # 2
PAGE 1 OF 1

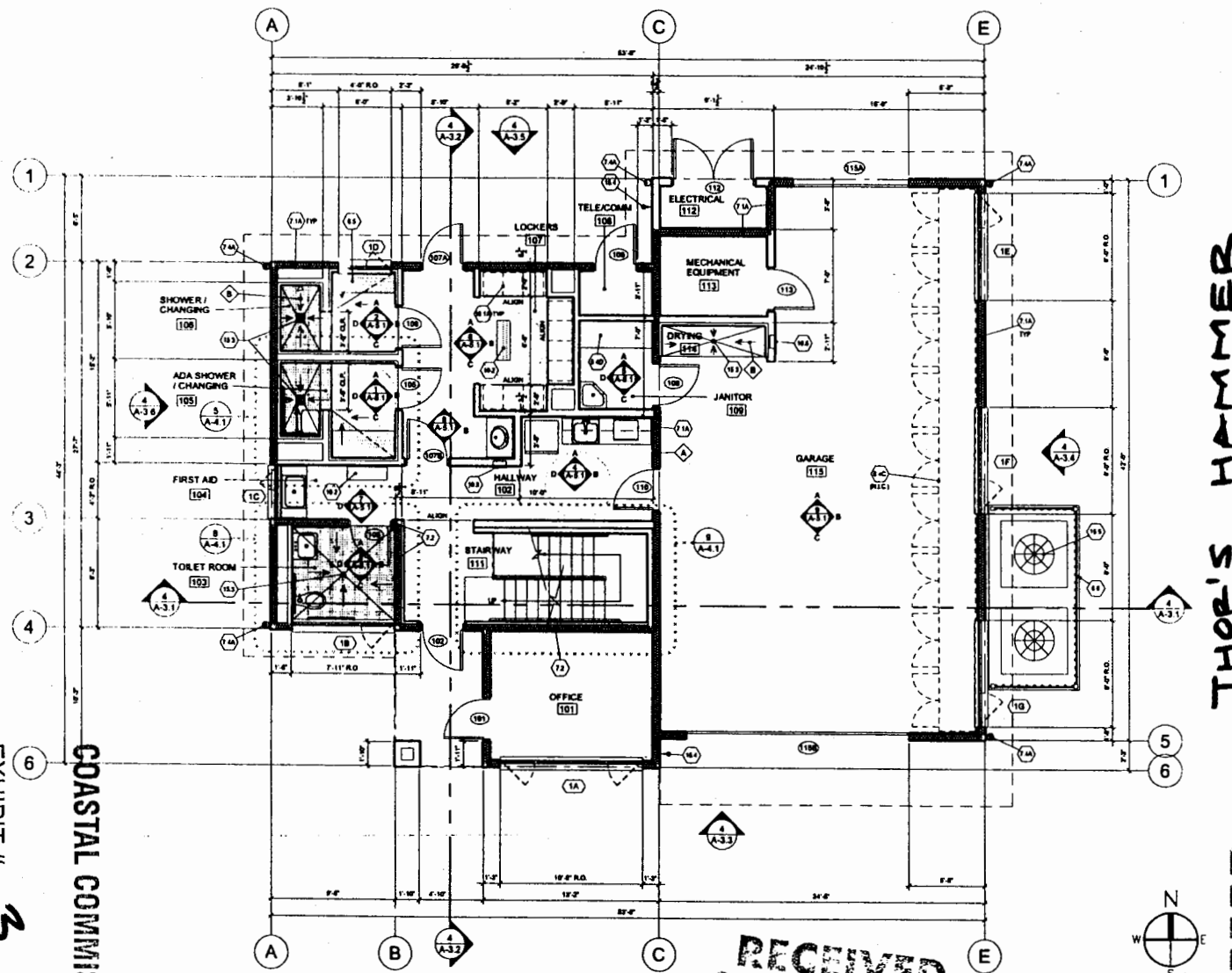

MATERIAL KEYNOTES

DIV 5 METALS
- 5.1A STAIR ASSEMBLY
- 5.1B HANDRAIL

DIV 6 WOOD & PLASTICS
- 6.4A COUNTER / BASE CABINET
- 6.4B WALL CABINET
- 6.4C TALL STORAGE CABINETS
- 6.4D ADJUSTABLE SHELVING
- 6.4E BACKSPLASH
- 6.5 BENCH (FIXED)
- 6.8 EQUIPMENT SCREEN

DIV 7 THERMAL & MOISTURE PROTECTION
- 7.1A BATT INSULATION (R-19)
- 7.1B BATT INSULATION (R-30)
- 7.2 BATT INSULATION (ACOUSTICAL)
- 7.4A DOWNSPOUT

DIV 10 SPECIALTIES
- 10.1A LOCKERS
- 10.1B LOCKER BASE
- 10.2 BENCH (MOVABLE)
- 10.3 FOLDING SHOWER SEAT
- 10.4 MIRROR
- 10.5A PAPER TOWEL DISPENSER
- 10.5B TOILET PAPER DISPENSER
- 10.5C WASTE RECEPTACLE
- 10.5D COMBO TOWEL DISP / WASTE RECEP
- 10.5E SOAP DISPENSER
- 10.5F GRAB BAR
- 10.5G SANITARY NAPKIN DISPOSAL
- 10.5H SEAT COVER DISPENSER
- 10.5J ROBE HOOK
- 10.5K UNDER-LAVATORY GUARD
- 10.6 MOP HOLDER
- 10.7 DRYING RACK
- 10.8 FIRE EXTINGUISHER / CABINET

DIV 11 EQUIPMENT
- 11.1 MICROWAVE OVEN
- 11.2 REFRIGERATOR

DIV 12 FURNISHINGS
- 12.1 HORIZONTAL BLINDS
- 12.2 ROLLER SHADE

DIV 15 MECHANICAL
- 15.1A LAVATORY
- 15.1B SINK
- 15.1C TOILET
- 15.1D SERVICE SINK
- 15.2A SHOWER HEAD
- 15.2B SHOWER CONTROLS
- 15.2C FLEXIBLE SHOWER SPRAY HOSE.
- 15.3 FLOOR DRAIN
- 15.4 HOSE BIB
- 15.5 MECHANICAL EQUIPMENT

SHEET KEYNOTES

- A 1-HOUR FIRE-RATED WALL ASSEMBLY
- B SLOPE FLOOR 1/8" MIN. / FOOT TO DRAIN

DEVELOPMENT SUMMARY

GROSS SQUARE FOOTAGE	EXISTING		PROPOSED	
	LIFE GUARD TOWER	DECK	LIFE GUARD HQ	DECK
1ST FLOOR (GARAGE)	0		1034	
1ST FLOOR (ENCLOSED)	235		953	
2ND FLOOR	81	154	373	
3RD FLOOR	0		373	487
TOTALS	316	154	2733	487

THOR'S HAMMER

SOUTHERN SERVICE CENTER
6885 RIO SAN DIEGO DRIVE SUITE # 270
SAN DIEGO, CA 92108
PHONE 619 220-5300
FAX 619 220-5400

DESIGNED	CS
DRAWN	CS/AS
CHECKED	
DATE	01/31/2005

COASTAL DEVELOPMENT PERMIT APPLICATION & PLAN SET

DSA/OPR HCU - 801 ACCESSIBILITY REVIEW

CERTIFICATION #

REVISIONS

DOHENY STATE BEACH
NEW LIFEGUARD HEADQUARTERS

SHEET TITLE
FIRST FLOOR PLAN

PROJECT NUMBER
01310M

SHEET NO
A-2.1
OF

COASTAL COMMISSION
EXHIBIT # 3
PAGE 1 OF 3

FIRST FLOOR PLAN

RECEIVED
South Coast Region
MAR 21 2005
CALIFORNIA COASTAL COMMISSION

BEACH

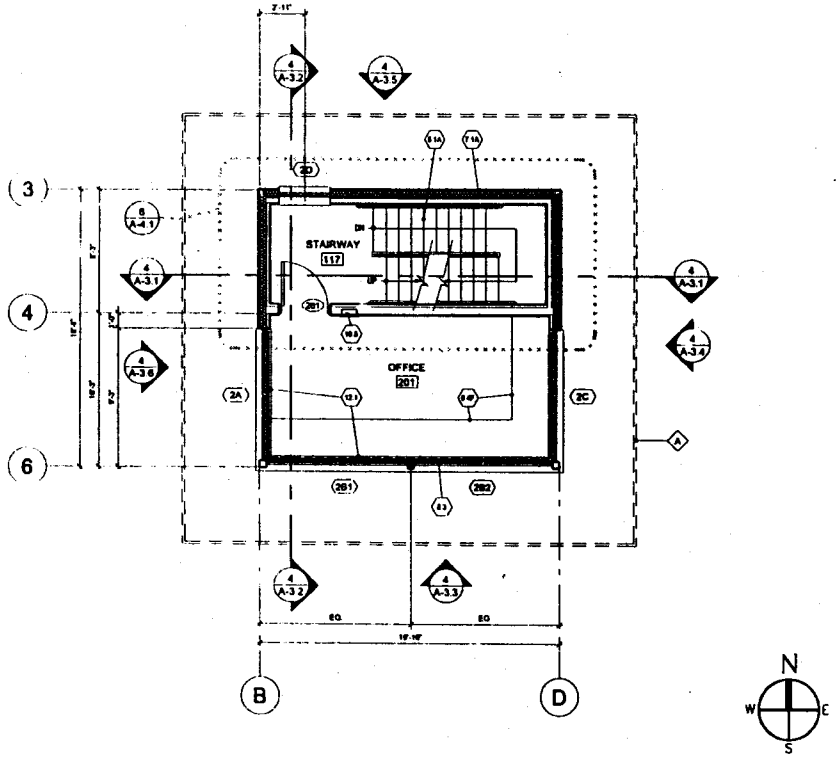

SECOND FLOOR TOWER PLAN

SCALE: 11x17: 1/8" = 1'-0" 22x34: 1/4" = 1'-0"

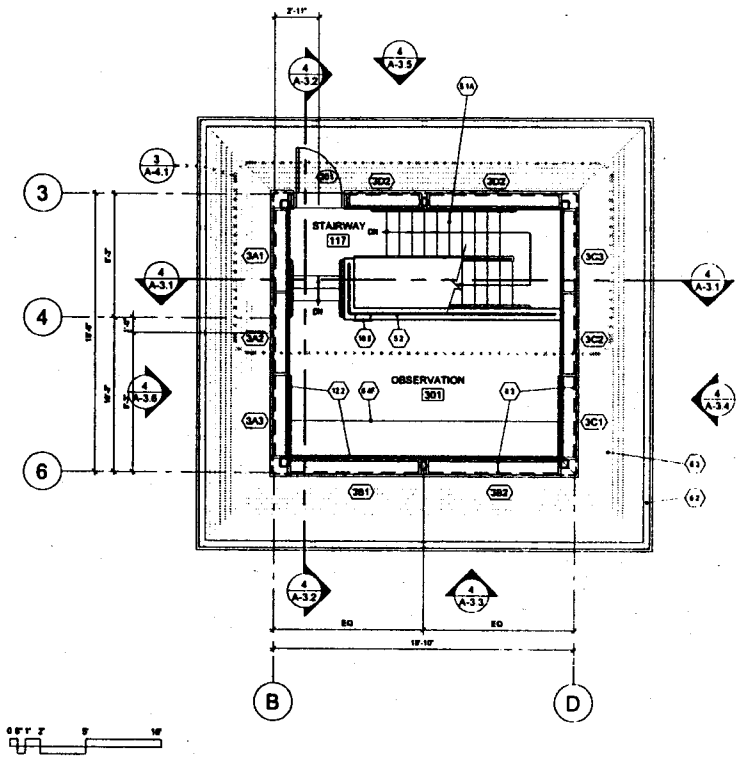

THIRD FLOOR TOWER PLAN

SCALE: 11x17: 1/8" = 1'-0" 22x34: 1/4" = 1'-0"

MATERIAL KEYNOTES

DIV 5 METALS
5.1A STAIR ASSEMBLY
5.2 GUARDRAIL

DIV 6 WOOD & PLASTICS
6.2 GUARDRAIL
6.3 CATWALK
6.4A COUNTER / BASE CABINET

DIV 7 THERMAL & MOISTURE PROTECTION
7.1A BATT INSULATION (R-19)

DIV 8 DOORS & WINDOWS
8.3 WINDOW ASSEMBLY

DIV 10 SPECIALTIES
10.8 FIRE EXTINGUISHER / CABINET

DIV 12 FURNISHINGS
12.1 HORIZONTAL BLINDS
12.2 ROLLER SHADE

SHEET KEYNOTES

A LINE OF CATWALK OVERHANG ABOVE
B NOTE

GENERAL NOTES

1 ALL DIMENSIONS TO F.O.S. UNLESS OTHERWISE NOTED
2 GRIDLINES ARE TO F.O.S. UNLESS OTHERWISE NOTED
3 FOR DOOR, WINDOW AND FINISH SCHEDULES SEE A-2.4

RECEIVED
South Coast Region
MAR 21 2005

CALIFORNIA
COASTAL COMMISSION

COASTAL COMMISSION
EXHIBIT # 3
PAGE 2 OF 3

SOUTHERN
SERVICE CENTER
6885 RIO SAN DIEGO
DRIVE SUITE # 270
SAN DIEGO, CA 92108
PHONE 619 220-5300
FAX 619 220-5400

DESIGNED CS
DRAWN CS/AS
CHECKED
DATE- 01/31/2005

COASTAL DEVELOPMENT PERMIT APPLICATION # 5-04-418

DSA/OPR MOU - 2.01 ACCESSIBILITY REVIEW

CERTIFICATION #

REVISIONS

DOHENY STATE BEACH
NEW LIFEGUARD HEADQUARTERS

SHEET TITLE
TOWER FLOOR PLANS

PROJECT NUMBER
01310M

SHEET NO
A-2.2
OF

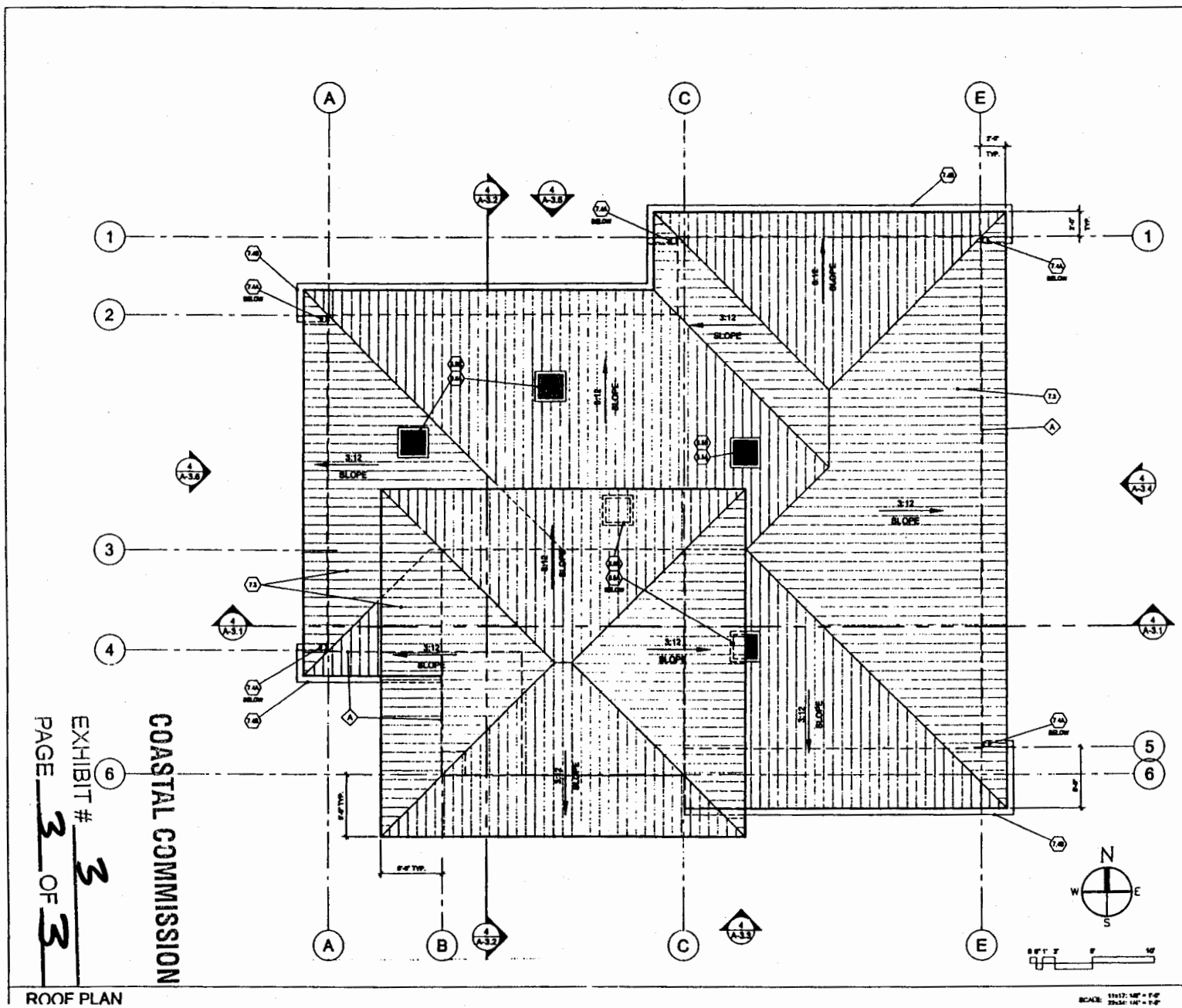

MATERIAL KEYNOTES

DIV 7 THERMAL & MOISTURE PROTECTION

7.3	CLAY TILE ROOFING
7.4A	DOWNSPOUT
7.4B	ROOF GUTTER

DIV 8 DOORS & WINDOWS

8.5A	SKYLIGHT
8.5B	CLEAR GLASS (08621)
8.5C	OBSCURE GLASS (08621)

SHEET KEYNOTES

A BUILDING WALL BELOW (DASHED)

GENERAL NOTES

1 ALL DIMENSIONS TO F.O.S. UNLESS OTHERWISE NOTED

2 GRIDLINES ARE TO F.O.S. UNLESS OTHERWISE NOTED

SCALE: 11x17: 1/8" = 1'-0" 22x34: 1/4" = 1'-0"

ROOF PLAN

COASTAL COMMISSION

EXHIBIT # 3

PAGE 3 OF 3

SOUTHERN SERVICE CENTER

5555 RIO SAN DIEGO DRIVE SUITE # 376
SAN DIEGO, CA 92108
PHONE 619 220-5300
FAX 619 220-5400

DESIGNED	CS
DRAWN	CS
CHECKED	
DATE	02/25/2005

LICENSED ARCHITECT C 13838 STATE OF CALIFORNIA

CALIFORNIA STATE FIRE MARSHAL APPROVAL

Approval of this plan does not authorize or approve any violation of devlation from applicable regulations. Final approval is subject to field inspection. One set of approved plans shall be available on the project site at all times.

Reviewed by: Date

DPR ACCESS COMPLIANCE REVIEW ACCESSIBILITY SECTION

Certification #

Reviewer Date

REVISIONS

DOHENY STATE BEACH NEW LIFEGUARD HEADQUARTERS

SHEET TITLE
ROOF PLAN

PROJECT NUMBER
01310M

SHEET NO.
A-2.3
15 OF 46

1 DETAIL SCALE: 11x17: 1/8" = 1'-0" 22x34: 1/4" = 1'-0"

2 DETAIL SCALE: 11x17: 1/8" = 1'-0" 22x34: 1/4" = 1'-0"

3 DETAIL SCALE: 11x17: 1/8" = 1'-0" 22x34: 1/4" = 1'-0"

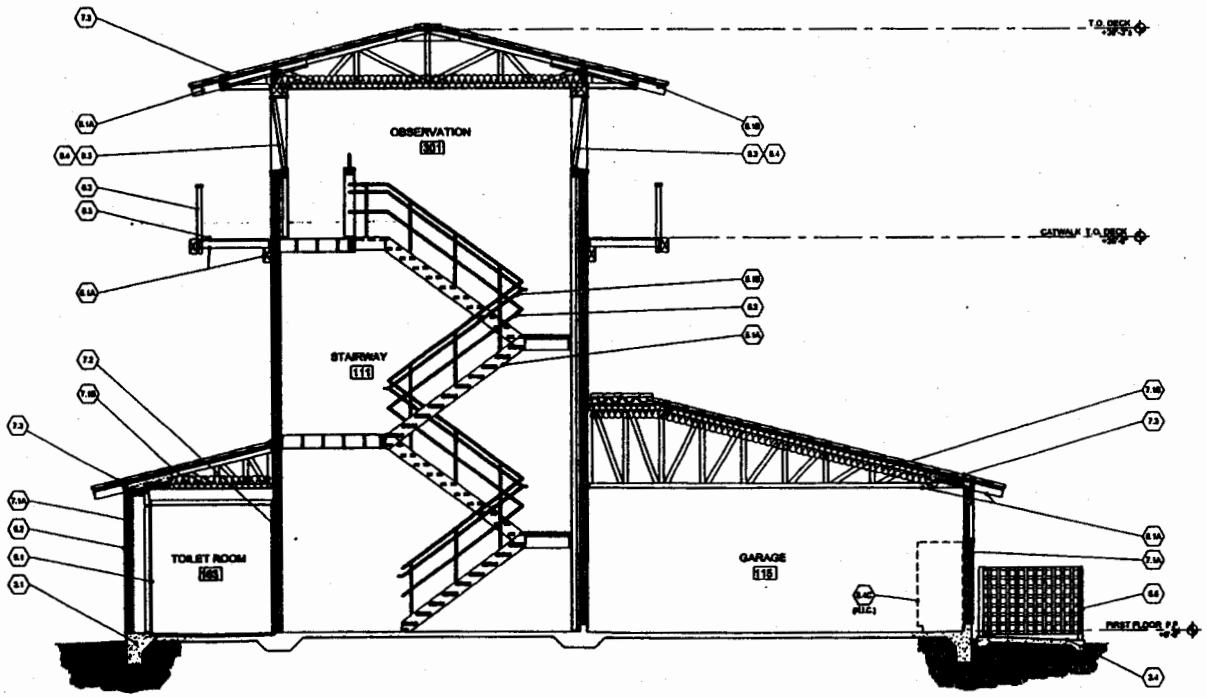

4 BUILDING SECTION SCALE: 11x17: 1/8" = 1'-0" 22x34: 1/4" = 1'-0"

MATERIAL KEYNOTES

DIV 3 CONCRETE
3.1 CONCRETE FOUNDATION
3.4 EQUIPMENT PAD

DIV 5 METALS
5.1A STAIR ASSEMBLY
6.1B HANDRAIL
6.2 GUARDRAIL

DIV 6 WOOD & PLASTICS
6.1A EXPOSED FRAMING
6.1B EXPOSED ROOF DECK
6.2 GUARDRAIL
6.3 CATWALK
6.4C TALL STORAGE CABINETS
6.4F COUNTER
6.6 EQUIPMENT SCREEN

DIV 7 THERMAL & MOISTURE PROTECTION
7.1A BATT INSULATION (R-19)
7.1B BATT INSULATION (R-30)
7.2 BATT INSULATION (ACOUSTICAL)
7.3 CLAY TILE ROOFING
7.4A DOWNSPOUT
7.4B ROOF GUTTER

DIV 8 DOORS & WINDOWS
8.1 DOOR / DOOR FRAME
8.3 WINDOW ASSEMBLY
8.4 GLAZING (08800)

DIV 9 FINISHES
9.1 CERAMIC TILE
9.2 CEMENT PLASTER

SHEET KEYNOTES

GENERAL NOTES

SOUTHERN SERVICE CENTER
5965 RIO SAN DIEGO DRIVE SUITE # 270
SAN DIEGO, CA 92108
PHONE 619 220-5300
FAX 619 220-5400

DESIGNED	CS
DRAWN	AS/CS
CHECKED	
DATE	02/25/2005

REVISIONS

DOHENY STATE BEACH
NEW LIFEGUARD HEADQUARTERS

SHEET TITLE
BUILDING SECTION

PROJECT NUMBER
01310M

SHEET NO.
A-3.1
15 OF 46

COASTAL COMMISSION
EXHIBIT # 4
PAGE 1 OF 2

1 DETAIL

SCALE: 11x17: 1/8" = 1'-0" 22x34: 1/4" = 1'-0"

2 DETAIL

SCALE: 11x17: 1/8" = 1'-0" 22x34: 1/4" = 1'-0"

3 DETAIL

SCALE: 11x17: 1/8" = 1'-0" 22x34: 1/4" = 1'-0"

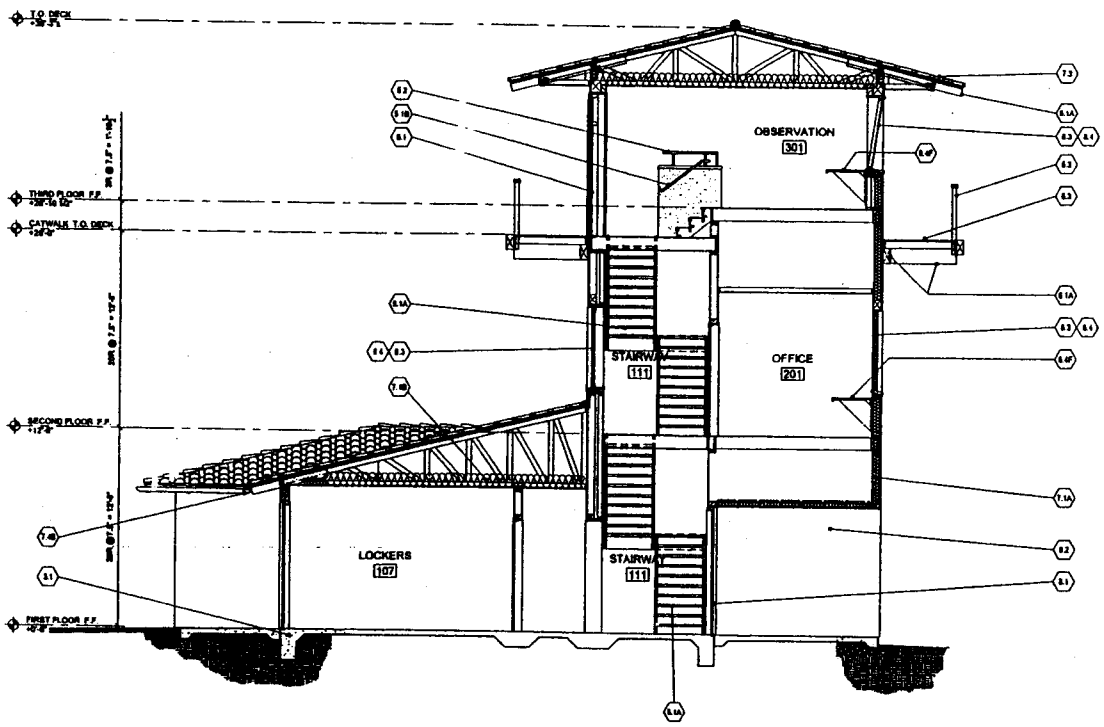

4 BUILDING SECTION

SCALE: 11x17: 1/8" = 1'-0" 22x34: 1/4" = 1'-0"

COASTAL COMMISSION

EXHIBIT # 4
PAGE 2 OF 2

MATERIAL KEYNOTES

DIV 3 CONCRETE
3.1 CONCRETE FOUNDATION
3.4 EQUIPMENT PAD

DIV 5 METALS
5.1A STAIR ASSEMBLY
5.1B HANDRAIL
5.2 GUARDRAIL

DIV 6 WOOD & PLASTICS
6.1A EXPOSED FRAMING
6.1B EXPOSED ROOF DECK
6.2 GUARDRAIL
6.3 CATWALK
6.4C TALL STORAGE CABINETS
6.4F COUNTER
6.5 EQUIPMENT SCREEN

DIV 7 THERMAL & MOISTURE PROTECTION
7.1A BATT INSULATION (R-19)
7.1B BATT INSULATION (R-30)
7.2 BATT INSULATION (ACOUSTICAL)
7.3 CLAY TILE ROOFING
7.4A DOWNSPOUT
7.4B ROOF GUTTER

DIV 8 DOORS & WINDOWS
8.1 DOOR / DOOR FRAME
8.3 WINDOW ASSEMBLY
8.4 GLAZING (08800)

DIV 9 FINISHES
9.1 CERAMIC TILE
9.2 CEMENT PLASTER

SHEET KEYNOTES

GENERAL NOTES

CALIFORNIA STATE PARKS SINCE 1944

SOUTHERN SERVICE CENTER
8885 RIO SAN DIEGO DRIVE SUITE # 270
SAN DIEGO, CA 92108
PHONE 619 220-5300
FAX 619 220-5400

DESIGNED	CS
DRAWN	AS/CS
CHECKED	
DATE	02/25/2005

LICENSED ARCHITECT C 12934 STATE OF CALIFORNIA

CALIFORNIA STATE FIRE MARSHAL APPROVED

Approval of this plan does not authorize or approve any violation of deviation from applicable regulations. Final approval is subject to field inspection. One set of approved plans shall be available on the project site at all times.

Reviewed by Date

DPR ACCESS COMPLIANCE REVIEW ACCESSIBILITY SECTION

Certification #

Reviewer Date

REVISIONS

DOHENY STATE BEACH NEW LIFEGUARD HEADQUARTERS

SHEET TITLE
BUILDING SECTION

PROJECT NUMBER
01310M

SHEET NO.
A-3.2
16 OF 48

1 DETAIL SCALE: 11x17: 1/8" = 1'-0" 22x34: 1/4" = 1'-0"

2 DETAIL SCALE: 11x17: 1/8" = 1'-0" 22x34: 1/4" = 1'-0"

3 DETAIL SCALE: 11x17: 1/8" = 1'-0" 22x34: 1/4" = 1'-0"

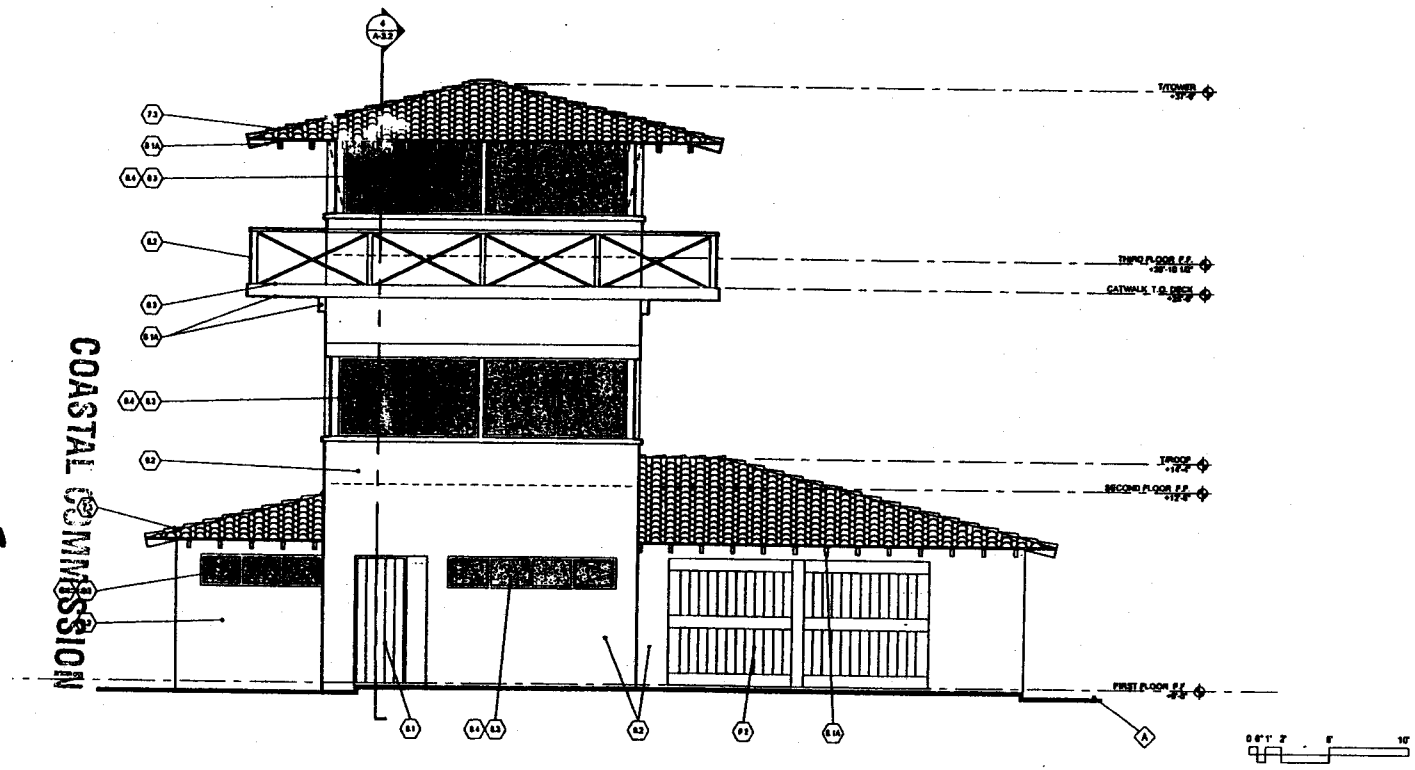

4 SOUTH ELEVATION SCALE: 11x17: 1/8" = 1'-0" 22x34: 1/4" = 1'-0"

MATERIAL KEYNOTES

DIV 6 WOOD & PLASTICS
6.1A EXPOSED FRAMING
6.2 GUARDRAIL
6.3 CATWALK

DIV 7 THERMAL & MOISTURE PROTECTION
7.3 CLAY TILE ROOFING
7.4A DOWNSPOUT
7.4B ROOF GUTTER

DIV 8 DOORS & WINDOWS
8.1 DOOR / DOOR FRAME
8.2 GARAGE DOOR / FRAME
8.3 WINDOW ASSEMBLY
8.4 GLAZING (08800)

DIV 9 FINISHES
9.2 CEMENT PLASTER

SHEET KEYNOTES

A FINISH GRADE

GENERAL NOTES

SOUTHERN SERVICE CENTER
8696 RIO SAN DIEGO DRIVE SUITE 8 270
SAN DIEGO, CA 92108
PHONE 619 220-5380
FAX 619 220-5480

DESIGNED	CS
DRAWN	CS/AS
CHECKED	
DATE	02/25/2005

LICENSED ARCHITECT LAN A. SULLIVAN C 12636 STATE OF CALIFORNIA

CALIFORNIA STATE FIRE MARSHAL - PROVED

Approval of this plan does not authorize or approve any omission of deviation from applicable regulations. Final approval is subject to field inspection. One set of approved plans shall be available on the project site at all times

Reviewed by: Date

DPR ACCESS COMPLIANCE REVIEW ACCESSIBILITY SECTION

Certification #

Reviewer Date

REVISIONS

DOHENY STATE BEACH
NEW LIFEGUARD HEADQUARTERS

SHEET TITLE
EXTERIOR ELEVATION SOUTH

PROJECT NUMBER
01310M

SHEET NO.
A-3.3
17 OF 45

1 DETAIL SCALE: 11x17: 1/8" = 1'-0" 22x34: 1/4" = 1'-0"

2 DETAIL SCALE: 11x17: 1/8" = 1'-0" 22x34: 1/4" = 1'-0"

3 DETAIL SCALE: 11x17: 1/8" = 1'-0" 22x34: 1/4" = 1'-0"

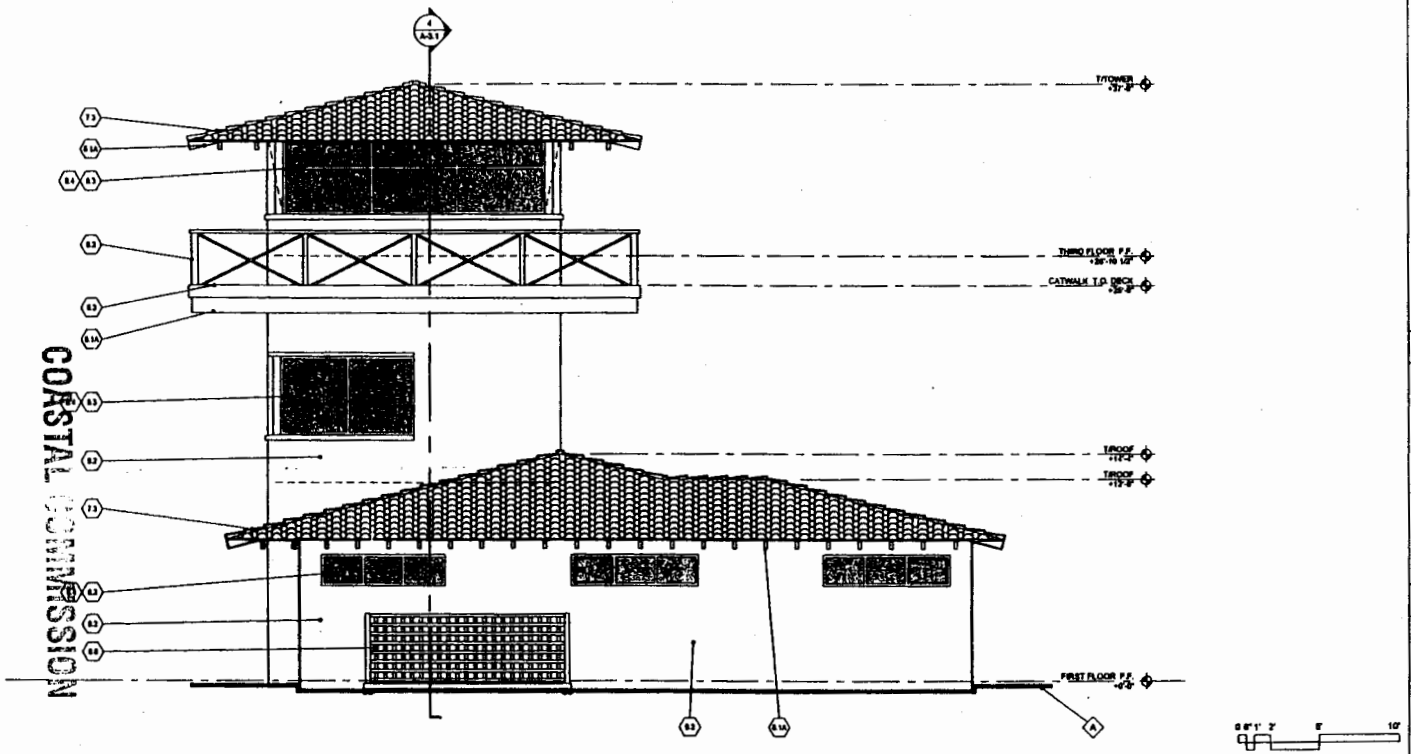

4 EAST ELEVATION SCALE: 11x17: 1/8" = 1'-0" 22x34: 1/4" = 1'-0"

MATERIAL KEYNOTES

DIV 6 WOOD & PLASTICS
- 6.1A EXPOSED FRAMING
- 6.2 GUARDRAIL
- 6.3 CATWALK
- 6.6 EQUIPMENT SCREEN

DIV 7 THERMAL & MOISTURE PROTECTION
- 7.3 CLAY TILE ROOFING
- 7.4A DOWNSPOUT
- 7.4B ROOF GUTTER

DIV 8 DOORS & WINDOWS
- 8.1 DOOR / DOOR FRAME
- 8.3 WINDOW ASSEMBLY
- 8.4 GLAZING (08800)

DIV 9 FINISHES
- 9.2 CEMENT PLASTER

SHEET KEYNOTES

A FINISH GRADE

GENERAL NOTES

SOUTHERN SERVICE CENTER
8885 RIO SAN DIEGO DRIVE SUITE # 270
SAN DIEGO, CA 92108
PHONE 619 220-5300
FAX 619 220-5400

DESIGNED	CS
DRAWN	CS/AS
CHECKED	CC
DATE	02/25/2005

LICENSED ARCHITECT CARL A. SHUSTER C 13936 STATE OF CALIFORNIA

CALIFORNIA STATE FIRE MARSHAL APPROVED

Approval of this plan does not authorize or approve any omission of deviation from applicable regulations. Final approval is subject to field inspection. One set of approved plans shall be available on the project site at all times.

Reviewed by Date

DPR ACCESS COMPLIANCE REVIEW ACCESSIBILITY SECTION

Certification # Reviewer Date

REVISIONS

DOHENY STATE BEACH
NEW LIFEGUARD HEADQUARTERS

SHEET TITLE
EXTERIOR ELEVATION EAST

PROJECT NUMBER
01310M

SHEET NO.
A-3.4
16 OF 46

EXHIBIT # 5
PAGE 2 OF 4

COASTAL COMMISSION

1 DETAIL SCALE: 11x17: 1/8" = 1'-0" 22x34: 1/4" = 1'-0"

2 DETAIL SCALE: 11x17: 1/8" = 1'-0" 22x34: 1/4" = 1'-0"

3 DETAIL SCALE: 11x17: 1/8" = 1'-0" 22x34: 1/4" = 1'-0"

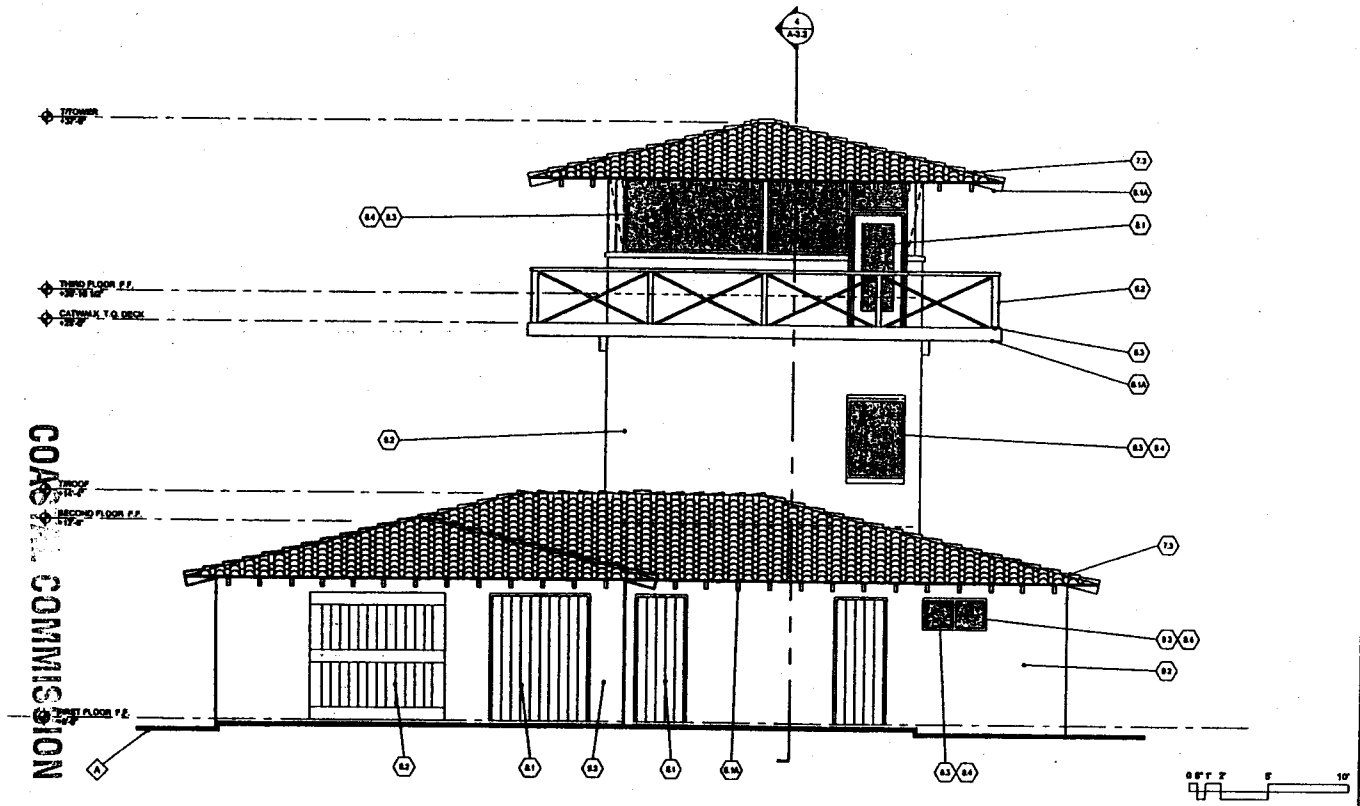

4 NORTH ELEVATION SCALE: 11x17: 1/8" = 1'-0" 22x34: 1/4" = 1'-0"

MATERIAL KEYNOTES

DIV 6 WOOD & PLASTICS
6.1A EXPOSED FRAMING
6.2 GUARDRAIL
6.3 CATWALK

DIV 7 THERMAL & MOISTURE PROTECTION
7.3 CLAY TILE ROOFING
7.4A DOWNSPOUT
7.4B ROOF GUTTER

DIV 8 DOORS & WINDOWS
8.1 DOOR / DOOR FRAME
8.2 GARAGE DOOR / FRAME
8.3 WINDOW ASSEMBLY
8.4 GLAZING (08800)

DIV 9 FINISHES
9.2 CEMENT PLASTER

SHEET KEYNOTES

A FINISH GRADE

GENERAL NOTES

CALIFORNIA STATE PARKS SINCE 1864

SOUTHERN SERVICE CENTER
8885 RIO SAN DIEGO DRIVE SUITE # 270
SAN DIEGO, CA 92108
PHONE 619 220-5380
FAX 619 220-5468

DESIGNED	CS
DRAWN	CS/AS
CHECKED	
DATE	02/25/2005

LICENSED ARCHITECT C 12036 STATE OF CALIFORNIA

CALIFORNIA STATE FIRE MARSHAL APPROVED

Approval of this plan does not authorize or approve any violation of deviation from applicable regulations. Final approval is subject to field inspection. One set of approved plans shall be available on the project site at all times

Reviewed by Date

DPR ACCESS COMPLIANCE REVIEW ACCESSIBILITY SECTION

Certification #

Reviewer Date

REVISIONS

DOHENY STATE BEACH
NEW LIFEGUARD HEADQUARTERS

SHEET TITLE
EXTERIOR ELEVATION NORTH

PROJECT NUMBER
01310M

SHEET NO.
A-3.5
19 OF 48

1 DETAIL SCALE: 11x17: 1/8" = 1'-0" 22x34: 1/4" = 1'-0"

2 DETAIL SCALE: 11x17: 1/8" = 1'-0" 22x34: 1/4" = 1'-0"

3 DETAIL SCALE: 11x17: 1/8" = 1'-0" 22x34: 1/4" = 1'-0"

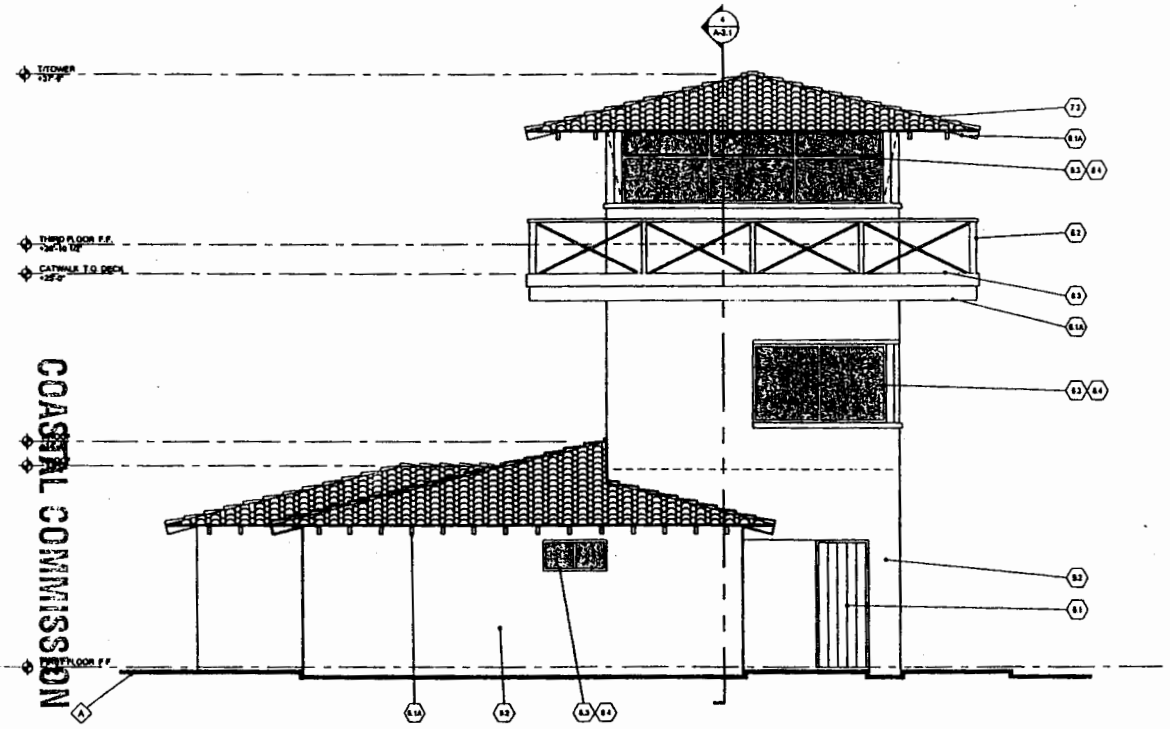

4 WEST ELEVATION SCALE: 11x17: 1/8" = 1'-0" 22x34: 1/4" = 1'-0"

MATERIAL KEYNOTES

DIV 6 WOOD & PLASTICS
6.1A EXPOSED FRAMING
6.2 GUARDRAIL
6.3 CATWALK

DIV 7 THERMAL & MOISTURE PROTECTION
7.3 CLAY TILE ROOFING
7.4A DOWNSPOUT
7.4B ROOF GUTTER

DIV 8 DOORS & WINDOWS
8.1 DOOR / DOOR FRAME
8.3 WINDOW ASSEMBLY
8.4 GLAZING (08800)

DIV 9 FINISHES
9.2 CEMENT PLASTER

SHEET KEYNOTES

A FINISH GRADE

GENERAL NOTES

CALIFORNIA STATE PARKS SINCE 1944

SOUTHERN SERVICE CENTER
8888 RIO SAN DIEGO DRIVE SUITE # 370
SAN DIEGO, CA 92108
PHONE 619 220-5300
FAX 619 220-5400

DESIGNED	CS
DRAWN	CS/AS
CHECKED	
DATE	02/25/2005

LICENSED ARCHITECT C 13658 STATE OF CALIFORNIA

CALIFORNIA STATE PARK MARSHAL APPROVES

Approval of this plan does not authorize or approve any violation of deviation from applicable regulations. Final approval is subject to field inspection. One set of approved plans shall be available on the project site at all times.

Reviewed by Date

DPR ACCESS COMPLIANCE REVIEW ACCESSIBILITY SECTION

Certification #

Reviewer Date

REVISIONS

DOHENY STATE BEACH
NEW LIFEGUARD HEADQUARTERS

SHEET TITLE
EXTERIOR ELEVATION WEST

PROJECT NUMBER
01310M

SHEET NO.
A-3.6
20 OF 48