**CALIFORNIA COASTAL COMMISSION**
South Coast Area Office
200 Oceangate, Suite 1000
Long Beach, CA 90802-4302
(562) 590-5071

# Th12f
**&**
# Th13a

| | |
|---|---|
| Filed (CDP): | May 25, 2006 |
| 49th Day (CDP): | July 13, 2006 |
| 180th Day (CDP): | November 21, 2006 |
| Filed (CC): | May 25, 2006 |
| 3 Months (CC): | August 23, 2006 |
| 6 Months (CC) | November 21, 2006 |
| Staff: | Karl Schwing-LB |
| Staff Report: | September 28, 2006 |
| Hearing Date: | October 11-13, 2006 |
| Commission Action: | |

## STAFF REPORT AND RECOMMENDATION ON COMBINED COASTAL DEVELOPMENT PERMIT APPLICATION AND CONSISTENCY CERTIFICATION

**COASTAL DEVELOPMENT PERMIT APPLICATION NO:** 5-06-117

**FEDERAL CONSISTENCY NO:** CC-031-06

**APPLICANT:** City of Newport Beach

**AGENTS:** Tom Rossmiller, Director, Harbor Resources Div.
City of Newport Beach
Thomas Mathews, Culbertson, Adams & Associates

**PROJECT DESCRIPTION:** Consistency Certification CC-031-06: Maintenance dredging under existing docks and off-shore disposal of up to 20,000 cubic yards of dredge material a year;
Coastal Development Permit 5-06-117: Beach nourishment of up to 20,000 cubic yards a year of suitable dredged material from existing dock areas; and replacement in-kind or construction of an alternative alignment of residentially associated piers, docks, and gangways.

**PROJECT LOCATION**: Dredging & Beach Nourishment in Newport Bay: Between the shoreline and project line, on beaches and within bay waters, at street ends and in front of bulkheads in lower Newport Bay and within Upper Newport Bay in the bulkheaded areas of Dover Shores, Bayside Village and existing docks at Shellmaker Island, City of Newport Beach, Orange County
Offshore Disposal: at EPA approved disposal sites known as LA-2 and LA-3 located approximately 6 miles offshore southwest of Point Fermin, Los Angeles County and approximately 4 miles southwest of the entrance to Newport Harbor, Orange County, respectively

**OTHER APPROVALS AND SUBSTANTIVE FILE DOCUMENTS:** See Appendix A

## SUMMARY OF STAFF RECOMMENDATION:

The City of Newport Beach is proposing to continue their now-expired (but previously authorized) small dredging and ocean or beach disposal (nourishment) program within the urbanized harbor areas of Newport Bay. There are approximately 1,200 small docks along the shoreline of Newport Bay where sediment occasionally shoals and renders such docks of limited or no use. The proposed program would authorize dredging underneath and around these small docks, as necessary, to assure their continued usefulness, and using suitable dredge material to nourish beaches in front of bulkheads and at street end beaches throughout the bay. Dredge material unsuitable for beach nourishment is disposed at the existing authorized ocean disposal sites, LA-2 and LA-3. The proposed dredging and disposal program is largely identical to the program previously approved by the Commission under CDP 5-99-282, as amended, and Consistency Certification No.s CC-078-99 and CC-077-01. Key elements include a yearly limit of 20,000 cubic yards of dredging and disposal (including sediment characterization requirements for each project), a 1000 cubic yard cap on the size of each individual dredging and ocean disposal event, a 500 cubic yard cap (increased to 1000, see below) on each individual beach nourishment event, establishment of a setback from eelgrass (no eelgrass impacts are allowed under the program), and Caulerpa taxifolia survey requirements. The current dredging and disposal program includes the following changes compared with the prior approval(s): 1) the per-event beach nourishment cap is increased from 500 cubic yards to 1000 cubic yards per beach nourishment event; 2) the eelgrass survey area is being enlarged from 15 feet from the project footprint out to 30 feet to ensure proper eelgrass monitoring; and 3) a new, more economical, eelgrass survey method is proposed that was developed in consultation with the National Marine Fisheries Service and the Commission's Staff Biologist.

The proposal also adds a new program that would authorize the repair, minor modification, and in-alignment replacement of private, non-commercial docks, floats, and piers throughout the harbor. The Commission has routinely approved these types of projects on the administrative calendar, subject to conditions addressing eelgrass, Caulerpa taxifolia and water quality protection. The current proposal would authorize these routine dock projects subject to a Caulerpa taxifolia survey, eelgrass and water quality protections, and the review and approval of the Executive Director.

In order to facilitate Commission review of these items, both the coastal development permit application and the consistency certification will be heard at the same time. Commission staff are recommending approval of the coastal development permit application and concurrence with the consistency certification. Conditions that define the program limits are imposed and include the annual limitations of 20,000 cubic yards of dredging and disposal and 1,000 cubic yards per event, and requirements related to eelgrass and Caulerpa taxifolia surveys, sediment testing, reporting, construction responsibilities and debris removal, and water quality protections, among other program details.

## A. STAFF RECOMMENDATION, MOTION AND RESOLUTION OF APPROVAL OF COASTAL DEVELOPMENT PERMIT

Staff recommends that the Commission make the following motion and adopt the following resolution to APPROVE the permit application with special conditions.

**MOTION**

*I move that the Commission approve Coastal Development Permit No. 5-06-117 pursuant to the staff recommendation.*

Staff recommends a YES vote. Passage of this motion will result in approval of the permit as conditioned and adoption of the following resolution and findings. The motion passes only by affirmative vote of a majority of the Commissioners present.

**RESOLUTION OF APPROVAL WITH CONDITIONS**

The Commission hereby approves a coastal development permit for the proposed development and adopts the findings set forth below on grounds that the development as conditioned will be in conformity with the policies of Chapter 3 of the Coastal Act and will not prejudice the ability of the local government having jurisdiction over the area to prepare a Local Coastal Program conforming to the provisions of Chapter 3. Approval of the permit complies with the California Environmental Quality Act because either 1) feasible mitigation measures and/or alternatives have been incorporated to substantially lessen any significant adverse effects of the development on the environment, or 2) there are no further feasible mitigation measures or alternatives that would substantially lessen any significant adverse impacts of the development on the environment.

## B. STAFF RECOMMENDATION, MOTION AND RESOLUTION OF APPROVAL OF CONSISTENCY CERTIFICATION

Staff recommends that the Commission make the following motion and adopt the following resolution to CONCUR with the consistency certification.

**MOTION**

*I move that the Commission concur with consistency certification CC-031-06 that the project described therein is consistent with the enforceable policies of the California Coastal Management Program (CCMP).*

Staff recommends a YES vote on the motion. Passage of this motion will result in a concurrence in the certification and adoption of the following resolution and findings. An affirmative vote of a majority of the Commissioners present is required to pass the motion.

**RESOLUTION TO CONCUR IN CONSISTENCY CERTIFICATION:**

The Commission hereby concurs in the consistency certification by the City of Newport Beach in CC-031-06, on the grounds that the project described therein is consistent with the enforceable policies of the CCMP.

## C. STANDARD CONDITIONS

1. Notice of Receipt and Acknowledgment. The permit is not valid and development shall not commence until a copy of the permit, signed by the permittee or authorized agent, acknowledging receipt of the permit and acceptance of the terms and conditions, is returned to the Commission office.

2. Expiration. If development has not commenced, the permit will expire two years from the date this permit is reported to the Commission. Development shall be pursued in a diligent manner and completed in a reasonable period of time. Application for extension of the permit must be made prior to the expiration date.

3. Interpretation. Any questions of intent or interpretation of any condition will be resolved by the Executive Director or the Commission.

4. Assignment. The permit may be assigned to any qualified person, provided assignee files with the Commission an affidavit accepting all terms and conditions of the permit.

5. Terms and Conditions Run with the Land. These terms and conditions shall be perpetual, and it is the intention of the Commission and the permittee to bind all future owners and possessors of the subject property to the terms and conditions.

**D. <u>SPECIAL CONDITIONS</u>** (Coastal Development Permit and Consistency Certification)

I. <u>Overall Special Conditions applicable to all uses of Coastal Development Permit (CDP) No. 5-06-117/Federal Consistency Certification (CC) No. CC-031-06</u>:

a. Annual maintenance dredging is limited to 20,000 cubic yards (CY) of material. Individual dredging projects must be no more than 1000 CY. Individual disposal projects must be no more than 1000 CY.

b. The City must submit a pre-construction notification and must receive a written authorization for the permittee to proceed from the Executive Director of the Commission before commencing any work.

c. The City of Newport Beach Tidelands Administrator shall be the primary Point of Contact (POC) for applicants seeking authorization under CDP No. 5-06-117/Federal Consistency Certification No. CC-031-06 and applications will be screened through this office. Once the POC has determined an application meets the conditions of this CDP and CC, the POC will forward the application to the Executive Director of the Commission along with a written certification for the Executive Director's review and approval. The POC may submit one batch of applications to the Executive Director for review and approval once per calendar month; additional submittals per calendar month may be authorized by the Executive Director for good cause. This certification shall include the following information:

i. Certification letter from the City of Newport Beach Tidelands Administrator confirming the proposed application meets the terms and conditions of CDP No. 5-06-117/Federal Consistency Certification No. CC-031-06 with special emphasis on the presence or absence of eelgrass (*Zostera marina*).

ii. Maps of the project site including location within the harbor, site address, site assessor's parcel number, site latitude and longitude coordinates (e.g., decimal degree format), as well as to-scale drawings of the proposed action (i.e., plan view and cross-section view of proposed activity), including the boundaries of any proposed sediment dredging and/or

disposal work, the location and physical dimensions of any existing docks, floats, piers, pilings and bulkheads and any proposed work thereto requested under this coastal development permit and consistency certification (and general outline of same that is present on adjacent sites), identification of type of construction materials (e.g. concrete, wood (including any chemical treatment) etc.), the location of the bulkhead, project, and pierhead lines, and the general location of any eelgrass beds within or near the work area.

iii. The proposed area of permanent and temporary impact to coastal waters (in acres or square feet), proposed dredge and/or disposal quantities (in cubic yards), including a detailed estimate of how much material has been dredged from or discharged onto the site through previous activities.

iv. Photos (minimum of five) of the beach area and the low tide line (i.e., prior to any work) with special emphasis on any areas of eelgrass.

v. Evidence of California State Lands Commission approval for any work upon land that is not within the City of Newport Beach tidelands grant, which shall consist of a copy of a permit issued by the California State Lands Commission, or letter of permission, or evidence that no permit or permission is required for the development to occur at the proposed site. The City shall inform the Executive Director of any changes to the project required by the California State Lands Commission. Such changes shall not be incorporated into the project until the permittee obtains a Commission amendment to this coastal development permit or a new coastal development permit, unless the Executive Director determines that no amendment or new permit is legally required.

vi. Evidence of the permittees legal ability to undertake the development on any land that is not owned in fee title by the City of Newport Beach or County of Orange or upon any land granted to the City or County pursuant to a State Tidelands Grant under which said grant does not specifically authorize the grantee to undertake the proposed activity which shall include written documentation demonstrating that the permittee has the legal ability to undertake the proposed development as conditioned herein. The permittee shall inform the Executive Director of any changes to the project required in obtaining such legal ability. Such changes shall not be incorporated into the project until the permittee obtains a Commission amendment to this coastal development permit, unless the Executive Director determines that no amendment is legally required.

vii. Evidence of Regional Water Quality Control Board approval, which shall consist of a copy of a permit issued by the Regional Water Quality Control Board, or letter of permission, or evidence that no permit or permission is required for the development to occur at the proposed site. The City shall inform the Executive Director of any changes to the project required by the Regional Water Quality Control Board. Such changes shall not be incorporated into the project until the permittee obtains a Commission amendment to this coastal development permit or a new coastal development permit, unless the Executive Director determines that no amendment or new permit is legally required.

viii. Certification of the following statement by the landowner: "By acceptance of this permit, the landowner acknowledges and agrees that the site may be subject to hazards from waves and erosion."

d. Annual Reporting: The City of Newport Beach shall submit annual reports for the life of this CDP and CC to the South Coast Area Office (Long Beach) of the California Coastal Commission documenting activities authorized under this coastal development permit and consistency certification. Each annual report shall be a cumulative ledger documenting all activities conducted using this CDP and CC to date. The annual report shall be submitted by July 1 of each year. Annual reports from the City shall include:

   i. Number and type of structures repaired, modified, or replaced;
   ii. Summary of dredge operations including;
      a. Location (Address) of each dredging operation;
      b. Areas and volumes of material dredged (in acres and CY);
      c. Disposal location(s) and volumes for each method used (i.e., beach disposal, LA-3, LA-2, or inland site).
   iii. An estimate of the total acreage of coastal waters impacted for each activity type;
   iv. Summary of any direct and indirect eelgrass impacts for each activity type, and the eelgrass mitigation completed or in progress;
   v. An updated, to-scale map showing the locations of all activities conducted using this coastal development permit and consistency certification to date.
   vi. Confirmation of compliance with all special conditions, or a detailed explanation of any special conditions not complied with.

e. Eelgrass-related requirements: ALL projects proposed for authorization under this CDP and CC shall meet the following requirements:

   i. All projects proposed for authorization under this CDP and CC must be surveyed for presence of eelgrass within the project footprint and out to thirty (30) feet (ft) in all directions from proposed project footprint;
   ii. This CDP and CC does not apply to work upon any docks, floats, piers, pilings, dredging or beach nourishment projects where eelgrass is found fifteen (15) feet or less (in any direction) from the proposed dredge or dredge material disposal footprint or footprint of any repaired, modified or replaced docks, floats, piers, and pilings;
   iii. For dredging projects eligible under this CDP and CC, where the dredged material will not be placed on an adjacent beach site or in front of an existing bulkhead (i.e., disposal at a designated offshore disposal site), any eelgrass present at the site must be located greater than 15 feet (in any direction) away from the proposed dredge footprint. No further eelgrass-related monitoring conditions apply in this situation provided the survey remains 'valid' in accordance with Section I.e.vi. below;
   iv. For dredging projects eligible under this CDP and CC, where the dredged material will be placed on a beach or in front of an existing bulkhead(s), the following eelgrass monitoring requirements apply:
      a. If eelgrass is not present within 30 feet (in any direction) of the proposed dredge or dredge material disposal footprint, no additional eelgrass monitoring requirements apply;
      b. If eelgrass is present between 15-30 feet from the proposed dredge material disposal footprint (in any direction), then monitoring of the site

for potential eelgrass impacts from disposal operations shall be required. Monitoring shall consist of pre- and post-project transects placed perpendicular to the shoreline and spaced five feet apart which map the eelgrass bed. Enough transects will be used to extend the length of the project footprint. Along each transect, the extent of eelgrass will be measured. Any decrease in eelgrass extent along any transect (pre-project vs. post-project) will constitute an impact. The pre-project transects shall be conducted no sooner than 60 days prior to the start of dredging and the post-project transects shall be conducted no later than 30 days following the completion of dredging.

c. Should the monitoring required in Section I.e.iv.b identify an impact to the mapped eelgrass bed, then mitigation consistent with the provisions of the Southern California Eelgrass Mitigation Policy shall apply. An eelgrass monitoring report will be submitted to the Corps, National Marine Fisheries Service (NMFS), and California Coastal Commission no later than 90 days following completion of dredging. If an impact was detected (as defined above), the report will include a summary of how the Southern California Eelgrass Mitigation Policy will be complied with. Implementation of mitigation shall require an amendment to this permit or a new coastal development permit unless the Executive Director determines that no amendment or new permit is required.

v. For eligible dock, float, pier, and piling repair, modification or replacement projects, any eelgrass present at the site must be located greater than 15 feet (in any direction) away from the proposed project footprint. No further eelgrass-related monitoring conditions apply in this situation provided the survey remains 'valid' in accordance with Section I.e.vi. below

vi. For purposes of this CDP and CC all eelgrass survey/mapping efforts must be completed during the active growth phase for the vegetation (typically March through October) and shall be valid for a period of 120 days with the exception of surveys completed in August - October. A survey completed in August - October shall be valid until the resumption of active growth (i.e., March 1). Work may only occur with a valid survey. If the survey expires prior to commencement of work, a new survey shall be required prior to commencement of any work.

vii. Prior to commencement of any activity authorized under this CDP and CC, the boundaries of any eelgrass meadow within 30 feet of the activity shall be marked with buoys so that equipment and vessel operators avoid damage to eelgrass meadows.

f. <u>*Caulerpa*-related requirements</u>: ALL projects proposed for authorization under this CDP and CC shall meet the following requirements:

i. Not earlier than 90 days nor later than 30 days prior to commencement or re commencement of any development authorized under this coastal development permit (the “project”), the permittee shall undertake a survey of the project area and a buffer area at least 10 meters beyond the project area to determine the presence of the invasive alga Caulerpa taxifolia. The survey shall include a visual examination of the substrate.

ii. The survey protocol shall be prepared in consultation with the Regional Water Quality Control Board, the California Department of Fish and Game, and the National Marine Fisheries Service.

iii. Within five (5) business days of completion of the survey, the permittee shall submit the survey:

a. for the review and approval of the Executive Director; and

b. to the Surveillance Subcommittee of the Southern California Caulerpa Action Team (SCCAT). The SCCAT Surveillance Subcommittee may be contacted through William Paznokas, California Department of Fish & Game (858/467 4218) or Robert Hoffman, National Marine Fisheries Service (562/980 4043) or their successors.

iv. If Caulerpa taxifolia is found within the project or buffer areas, the permittee shall not proceed with the project until 1) the permittee provides evidence to the Executive Director that all C. taxifolia discovered within the project and buffer area has been eliminated in a manner that complies with all applicable governmental approval requirements, including but not limited to those of the California Coastal Act, or 2) the permittee has revised the project to avoid any contact with C. taxifolia. No revisions to the project shall occur without a Coastal Commission approved amendment to this coastal development permit unless the Executive Director determines that no amendment is legally required.

g. Construction responsibilities and debris removal. ALL projects proposed for authorization under this CDP and CC shall comply with the following construction-related requirements:

i. No construction materials, debris, waste, oil or liquid chemicals shall be placed or stored where it may be subject to wave erosion and dispersion, stormwater, or where it may contribute to or come into contact with nuisance flow;
ii. Any and all debris resulting from construction activities shall be removed from the site within 10 days of completion of construction;
iii. No machinery or construction materials not essential for project implementation shall be allowed at any time in the intertidal zone or in the harbor;
iv. Sediment for beach nourishment shall be placed, not dumped, using means to minimize disturbance to bay sediments and to minimize turbidity;
v. If turbid conditions are generated during construction a silt curtain shall be utilized to minimize and control turbidity to the maximum extent practicable;
vi. All stock piles and construction materials shall be covered, enclosed on all sides, shall be located as far away as possible from drain inlets and any waterway, and shall not be stored in contact with the soil;
vii. All debris and trash shall be disposed of in the proper trash and recycling receptacles at the end of each construction day;
viii. The discharge of any hazardous materials into the harbor or any receiving waters shall be prohibited;

ix. Floating booms will be used to contain debris discharged into coastal waters and any debris discharged will be removed as soon as possible but no later than the end of each day.

x. Non-buoyant debris discharged into coastal waters will be recovered by divers as soon as possible after loss.

xi. Prior to commencement of any development that will result in disturbance to bay sediments, the boundaries of any eelgrass meadow within the general project area shall be marked with buoys so that equipment and vessel operators shall avoid damage to eelgrass meadows;

xii. Barges and other vessels shall be anchored a minimum of 15 feet from any eelgrass bed. Anchors and anchor chains shall not encroach into any eelgrass bed.

xiii. Barges and other vessels shall avoid transit over any eelgrass meadow to the maximum extent practicable. Where transit over eelgrass beds is unavoidable such transit shall only occur during high tides when grounding and potential damage to eelgrass can be avoided.

h. Term of Authorization for Dredging and Ocean or Beach Disposal: Authorization to dredge and dispose of suitable material at an approved ocean or beach disposal site under this CDP/CC shall expire 5 years from the date of issuance of the CDP/CC. Requests for coverage under this authorization shall be submitted for review and, if authorized by the Executive Director, the development shall be completed within the 5-year period.

i. Term of Authorization for repair, minor modification, and in-alignment replacement of private, non-commercial docks, floats, and piers: Authorization to repair, modify or replace docks, floats, and piers under this CDP/CC shall expire 3 years from the date of issuance of the CDP/CC. Requests for coverage under this authorization shall be submitted for review and, if authorized by the Executive Director, the development shall be completed within the 3-year period.

II. <u>Repair, minor modification, and in-alignment replacement of private, non-commercial docks, floats, and piers</u>:

a. All areas within the boundaries shown on Exhibit 4 of the September 28, 2006 staff report (herein referred to in these conditions as 'Exhibit 4') are eligible for repair, minor modification, and in-alignment replacement of private, non-commercial docks, floats, and piers, including the Rhine Channel, Newport Island, and Promontory Bay areas (Exhibit 4). No repairs, modifications, replacements or new, moorings, cantilevered patio decks, floating dry docks, marinas, groins, bulkheads/shoreline protective devices, floating buildings, vessel launching facilities, fuel floats, sewage pump-out facilities, or commercial use or facilities of any type are authorized by this permit.

b. For the purposes of this permit, replacement of piers, docks, and gangways shall be in-kind and in the existing alignment without exception unless an alternative alignment that complies with the City of Newport Beach's Harbor Permit Policy as of October 2003, Harbor Design Criteria 2006 Edition and Harbor Standard Drawings 2005 Edition and where no "deviation", "exception" or approval of an "alternate" material, design, or method of construction is necessary from the City and is

authorized by the California Coastal Commission and the Corps. For this permit, replacement of dock structures can occur seaward of the U.S. Pierhead Line for those dock structures which occur within the areas identified under 'Bayward Location of Piers and Floats' within the City of Newport Beach Harbor Permit Policy adopted as of October 2003 and which were previously authorized to extend seaward of the U.S. Pierhead Line.

c. Only concrete piles or steel piles with a non-toxic coating may be authorized under this CDP/CC. Use of any other type of pile is not authorized by this CDP/CC. The permittee shall submit written evidence that all proposed coatings are non-toxic in the marine environment.

d. Best Management Practices Program (BMPs). By acceptance of any authorization under this CDP/CC the permittee and all assignees agrees that the long-term water-borne berthing of boat(s) in the approved dock and/or boat slip will be managed in a manner that protects water quality pursuant to the implementation of the following BMPs:

i. Boat Cleaning and Maintenance Measures:

a. In-water top-side and bottom-side boat cleaning shall minimize the discharge of soaps, paints, and debris.

b. In-the-water hull scraping or any process that occurs under water that results in the removal of paint from boat hulls shall be prohibited. Only detergents and cleaning components that are designated by the manufacturer as phosphate-free and biodegradable shall be used, and the amounts used minimized.

c. The permittee shall minimize the use of detergents and boat cleaning and maintenance products containing ammonia, sodium hypochlorite, chlorinated solvents, petroleum distillates or lye.

ii. Solid and Liquid Waste Management Measures:

a. All trash, recyclables, and hazardous wastes or potential water contaminants, including old gasoline or gasoline with water, absorbent materials, oily rags, lead acid batteries, anti-freeze, waste diesel, kerosene and mineral spirits will be disposed of in a proper manner and will not at any time be disposed of in the water or gutter.

iii. Petroleum Control Management Measures:

a. Boaters will practice preventive engine maintenance and will use oil absorbents in the bilge and under the engine to prevent oil and fuel discharges. Oil absorbent materials shall be examined at least once a year and replaced as necessary. Used oil absorbents are hazardous waste in California. Used oil absorbents must therefore be disposed in accordance with hazardous waste disposal regulations. The boaters will regularly inspect and maintain engines, seals, gaskets, lines and hoses

in order to prevent oil and fuel spills. The use of soaps that can be discharged by bilge pumps is prohibited.

b. If the bilge needs more extensive cleaning (e.g., due to spills of engine fuels, lubricants or other liquid materials), the boaters will use a bilge pump-out facility or steam cleaning services that recover and properly dispose or recycle all contaminated liquids.

c. Bilge cleaners which contain detergents or emulsifiers will not be used for bilge cleaning since they may be discharged to surface waters by the bilge pumps.

e. This coastal development permit and consistency certification does not authorize the repair, modification, or in-alignment replacement of any bulkheads/shoreline protective structure as has been authorized in U.S. Army Corps of Engineers Permit No. 54 (File No. 200501233 DPS). Such development shall require separate review and approval by the Commission through the regular coastal development permit/consistency certification process.

III. Minor maintenance dredging under and adjacent to previously authorized private, public, and commercial docks, floats, and piers:

a. For this CDP/CC, the term dredging operations shall mean: navigation of the dredging vessel at the dredging site, excavation of dredged material within the project boundaries, and placement of dredged material into a hopper dredge or disposal barge or scow.

b. Under this CDP/CC, dredging operations are limited to -7 feet MLLW with a 1-foot allowable overdraft. Discharge of material dredged from below –8 feet below MLLW (dredging design depth plus overdredge depth), which represents the characterization depth, or dredged from outside the project boundaries (as shown on attached Exhibit 4), is not authorized by this CDP/CC.

c. The Rhine Channel, Newport Island, and Promontory Bay areas and the West Lido Channel (from sediment sampling station 1-3 north to the Lido Bridge) or from within 1000 feet in any direction from sediment sampling station 1-5 (15th Street public pier) (see excluded areas on Exhibit 4) are not eligible for sediment dredging or disposal operations authorization under this CDP/CC.

d. Sediments dredged from areas 1(except for the excluded areas described in subsection III.c above), 2, 3, and 4 (see areas where dredging is authorized on Exhibit 4) within the proposed project area that are suitable for beach nourishment (i.e that conform with the "grain size criteria" identified under "Beach disposal (beach nourishment)" in section V of these special conditions below) shall be used for beach nourishment.

e. Except for the areas described in subsection III.c above (where dredging and disposal is not authorized), all of the sediments dredged from within the proposed areas 1-4 that are deemed unsuitable for beach nourishment are suitable for ocean disposal as identified under "Offshore (ocean) disposal of dredged material" in Section IV below.

f. Dredging operations authorized in this permit shall be limited to the areas with existing authorized docks or bulkheads in Upper and Lower Newport Bay as shown in Exhibit 4. No dredging operation is authorized in any other location under this permit. No more that 1000 CY of dredged material is authorized for dredging operations for any individual project (i.e., any single and complete project with independent utility) proposed for authorization under this CDP/CC. Except as necessary to comply with Special Condition I.g of this authorization, this CDP/CC does not authorize the permanent placement or removal of buoys.

g. Sediment Testing Requirements. The Permittee is prohibited from dredging and disposing material in coastal waters that has not been tested and determined by the Commission, in consultation with the Corps and with the Environmental Protection Agency Region IX (EPA), to be both clean and suitable for ocean disposal or beach nourishment. Prior to each dredging episode at each individual dredging location and prior to beach nourishment at each nourishment location, the permittee shall sample the material to be dredged and any beach-receiver location for the purpose of determining the physical characteristics of the material. Testing shall be performed consistent with procedures defined in: "Procedures for Handling and Chemical Analysis of Sediment and Water Samples," by Russell H. Plumb (1981), Corps Technical Report EPA/CE-81-1, pages 3-28 to 3-47. The grain size test shall be conducted on a composite of at least one (1) core per one-quarter (1/4) acre area to be dredged and/or at least one (1) core per site for each project, as well as at least one (1) core per receiver beach location. The core depth shall be equivalent to the proposed dredging depth plus any over-dredging. Grain size data shall be reported to the nearest 1% for sand, silt, and clay consistent with procedures defined in: "Procedures for Handling and Chemical Analysis of Sediment and Water Samples," by Russell H. Plumb (1981), Corps Technical Report EPA/CE-81-1, pages 3-28 to 3-47.

h. At least 15 calendar days before initiation of any dredging operations authorized by this permit, the Permittee shall send a dredging and disposal operations plan to the Corps, EPA, and CCC with the following information:

   i. A list of the names, addresses and telephone numbers of the Permittee's project manager, the contractor's project manager, the dredging operations inspector, the disposal operations inspector and the captain of each tug boat, hopper dredge or other form of vehicle used to transport dredged material to the designated disposal site.
   ii. A list of all vessels, major dredging equipment and electronic positioning systems or navigation equipment that will be used for dredging and disposal operations, including the capacity, load level and acceptable operating sea conditions for each hopper dredge or disposal barge or scow to assure compliance with special conditions on dredging and disposal operations.
   iii. For this CDP/CC only: see above for sediment testing requirements.
   iv. A detailed description of the dredging and disposal operations authorized by this permit. Description of the dredging and disposal operations should include, at a minimum, the following:
      a. Dredging and disposal procedures for the dredged material determined by the Corps and EPA Region IX to be unsuitable for ocean disposal.

b. Dredging and disposal procedures for the material to be dredged from the proposed site.
c. A schedule showing when the dredging project is planned to begin and end.

v. A predredging bathymetric condition survey, taken within thirty (30) days before the dredging begins. One of two survey methods can be used:
a. Survey taken via lead line, sounding disc, or sounding pole techniques according to Chapter 8 (Manual Depth Measurement Techniques) from the Corps Engineering and Design - Hydrographic Surveying manual (EM 1110-2-1003, published 01 Jan 2002). Each individual project survey using this method will include a minimum of 3 sounding points (adjusted for tide) per individual dock.
b. Survey (presented as a large format plan view drawing), taken within thirty (30) days before the dredging begins, accurate to 0.5-foot with the exact location of all soundings clearly defined on the survey chart. The predredge survey chart shall be prepared showing the following information:
i. The entire dredging area, the toe and top of all side-slopes and typical cross sections of the dredging areas. To ensure that the entire area is surveyed, the predredge condition survey should cover an area at least 50 feet outside the top of the side-slope or the boundary of the dredging area, unless obstructions are encountered.
ii. The dredging design depth, overdredge depth and the side-slope ratio.
iii. The total quantity of dredged material to be removed from the dredging areas and the side-slope areas.
iv. Areas shallower than the dredging design depth shall be shaded green, areas between the dredging design depth and overdredge depth shall be shaded yellow, and areas below overdredge depth that will not be dredged shall be shaded blue. If these areas are not clearly shown, the Corps may request additional information.
v. The predredging survey chart shall be signed by the Permittee to certify that the data are accurate and that the survey was completed within thirty (30) days before the proposed dredging start date.
vi. A debris management plan to prevent disposal of large debris at all disposal locations. The debris management plan shall include: sources and expected types of debris, debris separation and retrieval methods, and debris disposal methods.

i. The Permittee shall not commence individual dredging operations unless and until the Permittee receives a written authorization to proceed from the Executive Director of the Commission before commencing any work.

j. The Permittee shall submit a post-dredging completion report to the Executive Director of the Commission within 30 calendar days after completion of each dredging project to document compliance with all general and special conditions defined in this permit. The report shall include all information collected by the Permittee, the dredging operations inspector and the disposal operations inspector or the disposal vessel captain as required by the special conditions of this permit. The report shall indicate whether all general and special permit conditions were met.

Any violations of the permit shall be explained in detail. The report shall further include the following information:

i. Permit and project number.
ii. Start date and completion date of dredging and disposal operations.
iii. Total cubic yards disposed at the authorized disposal site(s).
iv. Mode of dredging.
v. Mode of transportation.
vi. Form of dredged material.
vii. Frequency of disposal and plots of all trips to the authorized disposal site(s).
viii. Tug boat or other disposal vessel logs documenting contact with the USCG before each trip to the authorized ocean disposal site.
ix. Percent sand, silt and clay in dredged material: <u>for this CDP/CC only</u>, see sediment testing requirements above.
x. A certified report from the dredging site inspector indicating all general and special permit conditions were met. Any violations of the permit shall be explained in detail.
xi. Pre-dredging hydrographic survey (per special condition III.h above).
xii. A detailed post-dredging hydrographic survey of the dredging area. The survey shall show areas above the dredging design depth shaded green, areas between the dredging design depth and overdredge depth shaded yellow, areas below overdredged depth that were not dredged or areas that were deeper than the overdredge depth before the project began as indicated on the predredging survey shaded blue, and areas dredged below the overdredge depth or outside the project boundaries shaded red. The methods used to prepare the post-dredging survey shall be the same methods used in the predredging condition survey. The survey shall be signed by the Permittee certifying that the data are accurate.

IV. <u>Offshore (ocean) disposal of dredged material</u>:

a. All of the sediments dredged from within Areas 1, 2, 3, and 4 that are deemed unsuitable for beach nourishment are suitable for ocean disposal, with the following exceptions: The Rhine Channel, Newport Island, and Promontory Bay and the West Lido Channel (from sediment sampling station 1-3 north to the Lido Bridge) or from within 1000 feet in any direction from sediment sampling station 1-5 (15th Street public pier) (see areas identified on Exhibit 4) are not eligible for sediment dredging or disposal operations authorization under this CDP/CC.

b. Prior to commencement of ocean disposal, the results of each sampling episode described in Section III.g above shall be submitted for the review and approval of the Executive Director. Dredged material deemed unsuitable for beach disposal/nourishment may be deposited at the approved ocean disposal sites only after the Executive Director has concurred with a City determination that the materials to be dredged have been deemed unsuitable for beach nourishment and are suitable for ocean disposal using the standards in these special conditions. All dredged material deemed unsuitable for beach nourishment shall be disposed of at an approved location according to all federal, state and local regulations. If the disposal site is not located at an approved ocean disposal site and is located in the coastal zone, a separate coastal development permit application shall be filed for

the disposal of the material. All contracts involving the subject project shall include the above stated condition of approval.

c. For this permit, the phrase "ocean disposal operations" shall mean: the transportation of dredged material from the dredging site to the ocean disposal site, proper disposal of dredged material at the central disposal area within the ocean disposal site, and transportation of the hopper dredge or disposal barge or scow back to the dredging site.

d. The ocean disposal sites are demarcated as circles with the center coordinates and radii listed below:

   LA-2: 33 degrees 37.10 minutes North Latitude, 118 degrees 17.40 minutes West Latitude (NAD 1983), circular site with radius of 3,000 feet.

   LA-3: (coordinates of the soon-to-be permanently designated site, effective October 2005): 33 degrees 31.00 minutes North Latitude, 117 degrees 53.50 minutes West Longitude (NAD 1983), circular site with radius of 3,000 feet.

e. In no case will offshore (ocean) or beach disposal be authorized for material dredged below the sediment testing characterization depth (currently -8 MLLW) for any particular site.

f. No more than 1000 cubic yards of dredged material excavated for an individual dredging project authorized under this CDP/CC are authorized for disposal at either the LA-2 or LA-3 ocean disposal site.

g. The Permittee shall ensure dredged material is not leaked or spilled from the disposal vessel(s) during transit to the ocean disposal site. The Permittee shall transport dredged material to the ocean disposal site only when weather and sea state conditions will not interfere with safe transportation and will not create risk of spillage, leak or other loss of dredged material during transit. No disposal vessel trips shall be initiated when the National Weather Service has issued a gale warning for local waters during the time period necessary to complete disposal operations.

V. <u>Beach disposal (beach nourishment)</u>:

a. Grain Size Criteria: Material utilized for beach nourishment shall have a sand content that is either i) greater than 80% sand; or ii) at least 75% sand and within 10% of the sand content of the receiver beach. Any material that meets the requirements outlined above for beach nourishment and consists of less than 80% sand shall only be placed upon submerged beach areas (i.e. below the water line).

b. Prior to commencement of beach nourishment at a site, the results of each sampling episode and beach nourishment compatibility test described in Section III.g above shall be submitted for the review and approval of the Executive Director. Dredged material deemed suitable for beach nourishment may be deposited at the approved deposition sites only after the Executive Director has concurred with a City determination that the materials to be dredged have been deemed "suitable" using the standards in these special conditions. All dredged material deemed "unsuitable"

for beach nourishment shall be disposed of at an approved location according to all federal, state and local regulations. If the disposal site is not within an approved ocean disposal site as identified in IV.d above but is located in the coastal zone, a separate coastal development permit application shall be filed for the disposal of the "unsuitable" material. All contracts involving the subject project shall include the above stated condition of approval.

c. The Rhine Channel, Newport Island, and Promontory Bay areas and the West Lido Channel (from sediment sampling station 1-3 north to the Lido Bridge) or from within 1000 feet in any direction from sediment sampling station 1-5 (15th Street public pier) (see excluded areas identified on Exhibit 4) are not eligible for sediment dredging or disposal operations under this CDP/CC.

d. Beach disposal of material dredged under this CDP/CC is only authorized for beach disposal sites immediately adjacent to or within 1,000 feet of the authorized dredge site.

e. In no case will beach disposal be authorized with material dredged below the sediment testing characterization depth (currently -8 MLLW) for any particular site.

f. A detailed description of the transport and discharge operations authorized by this permit will be submitted to the Executive Director of the Commission for review and approval at least 15 calendar days prior to work in coastal waters. Description of the transport and discharge operations should include, at a minimum, the following:
    i. Transport and discharge procedures for all sediment, including all material unsuitable for beach nourishment discharge.
    ii. A schedule showing when the beach nourishment project is planned to begin and end.
    iii. A debris management plan to prevent disposal of large debris at all beach discharge locations. The debris management plan shall include: sources and expected types of debris, debris separation and retrieval methods, and debris disposal methods.
    iv. The plan shall include the volume of material to be excavated and discharged.
    v. The plan shall list previous discharges by site, date, and volume, as well as the total volume of material which has been excavated and discharged to date, using this CDP/CC.

g. The City must submit a pre-construction notification and must receive a written authorization to proceed from the Executive Director of the Commission before the permittee may commence any work.

h. The permittee shall send one (1) copy of a beach disposal post-discharge report to the Executive Director documenting compliance with all general and special conditions defined in this permit. The post-discharge report shall be sent within 30 calendar days after completion of the discharge operations authorized in this permit. The report shall indicate whether all general and special permit conditions were met. Any violations of the permit shall be explained in detail. The report shall include:

    i. CDP/CC number.

ii. Identify source of material.
iii. Total cubic yards disposed at each beach disposal site.
iv. Modes of transportation and discharge.
v. Actual start date and completion date of transport and discharge operations.

i. The Permittee shall implement all appropriate, standard Best Management Practices to ensure that toxic materials, silt, debris, or excessive eroded materials do not enter coastal waters due to beach nourishment operations. Sediment for beach nourishment shall be placed, not dumped, using means to minimize disturbance to bay sediments and to minimize turbidity. If turbid conditions are generated during construction a silt curtain shall be utilized to minimize and control turbidity to the maximum extent practicable.

j. The permittee will establish a safety flag perimeter of the beach nourishment area during disposal activities, and monitor the premises to protect the general public from construction hazards and equipment.

k. No maintenance, storage, or fueling of heavy tracked equipment or vehicles will occur within 500 feet of the high tide line of waters of the U.S.

VI. Inland disposal:

a. If neither beach disposal nor offshore disposal are available for an individual project proposed under this CDP/CC, such development shall require separate review and approval by the Commission through the regular coastal development permit/consistency certification process.

VII. Mitigation:

a. This CDP/CC does not authorize significant impacts to aquatic resources. Based on any relevant information, the Executive Director will determine if impacts to aquatic resources have occurred and if mitigation is required. Such development shall require separate review and approval by the Commission through the regular coastal development permit/consistency certification process.

## E. FINDINGS AND DECLARATIONS

The Commission hereby finds and declares:

### I. Background, Project Location and Description

#### a. Background

The City of Newport Beach is proposing to continue their previously authorized and now-expired small dredging and ocean or beach disposal (nourishment) program within the urbanized harbor areas of Newport Bay, Orange County. Suitable dredge material is used to nourish beaches in front of bulkheads and at street end beaches throughout the bay. Dredge material unsuitable for beach nourishment is disposed at the existing authorized ocean disposal sites, LA-2 and LA-3 (see

Consistency Determination No. CD-065-05). The proposed dredging and disposal program is largely identical to the program previously approved by the Commission under CDP 5-99-282, as amended, and Consistency Certification No.s CC-078-99 and CC-077-01. Key elements include a yearly limit of 20,000 cubic yards of dredging and disposal (including sediment characterization requirements for each project), a 1000 cubic yard cap on the size of each individual dredging and ocean disposal event, a 500 cubic yard cap (increased to 1000, see below) on each individual beach nourishment event, establishment of a setback from eelgrass (no eelgrass impacts are allowed under the program), and Caulerpa taxifolia survey requirements. The current dredging and disposal program includes the following changes compared with the prior approval(s): 1) the per-event beach nourishment cap is increased from 500 cubic yards to 1000 cubic yards per beach nourishment event; 2) the eelgrass survey area is being enlarged from 15 feet from the project footprint out to 30 feet to ensure proper eelgrass monitoring; and 3) a new, more economical, eelgrass survey method is proposed that was developed in consultation with the National Marine Fisheries Service and the Commission's Staff Biologist.

The proposal also adds a new program that would authorize the repair, minor modification, and in-alignment replacement of private, non-commercial docks, floats, and piers throughout the harbor. The Commission has routinely approved these types of projects on it's administrative calendar, subject to conditions addressing eelgrass and water quality protection. The current proposal would authorize these routine dock projects, subject to a survey for Caulerpa taxifolia, eelgrass and water quality protections and the review and approval of the Executive Director. This element of the City's proposal is described more fully below.

The coastal development permit is only for the deposition of suitable dredged material for beach nourishment and the repair, minor modification, and in-alignment replacement of private, non-commercial docks, floats, and piers. The beach nourishment is a non-exempt form of development given the attendant use of mechanized equipment on a beach. The actual dredging activity, which is required for the maintenance of existing navigational channels, is exempt from coastal development permit requirements. Pursuant to Section 30610(d) of the Coastal Act, maintenance dredging less than 100,000 cubic yards in one year is exempt from coastal development permit requirements.

The coastal development permit is a companion to Consistency Certification CC-031-06 that requests authorization of the dredging and any necessary off-shore disposal of dredge materials. However, note that the U.S. Army Corps of Engineers Regional General Permit (RGP) No. 54 permit includes reference to repair, minor modification, and in-alignment replacement of bulkheads. These items have been specifically excluded by the City of Newport Beach from the project description of this application for coastal development permit and the request for consistency certification. In addition, Special Condition II.a specifically excludes these activities from this coastal development permit and consistency certification. Separate coastal development permits are required for these activities.

**b. Location**

The proposed dredging, beach nourishment and docks would occur between the shoreline and project line, on beaches and within bay waters, at street ends and in front of bulkheads in lower Newport Bay and within Upper Newport Bay in the bulkheaded areas of Dover Shores, Bayside Village and existing docks at Shellmaker Island, City of Newport Beach, Orange County (Exhibit 1 and 4). The proposed offshore disposal would occur at EPA and Commission-approved disposal sites known as LA-2 and LA-3 located approximately 6 miles offshore southwest of Point Fermin, Los

Angeles County and approximately 4 miles southwest of the entrance to Newport Harbor, Orange County, respectively.

In addition, there are other parts of the Bay that are not a part of this consistency certification and permit. For instance, areas of the harbor where there are no bulkheads and/or docks, such as the shoreline in Upper Newport Bay adjacent to Castaways, the marina and sandy beach surrounding the cove at Newport Dunes, areas adjacent to Shellmaker Island and the area within the Upper Newport Bay Ecological Reserve, are not proposed for dredging, beach nourishment, or dock work. There are also specific areas within the lower bay proposed to be excluded from certain activities identified in the program. For example, within the following areas, re-construction of private, non-commercial piers, docks, and gangways is proposed, but dredging and beach nourishment are excluded: Promontory Bay (generally located between Harbor Island Drive and Bayside Drive), The Rhine Channel, and the Rivo Alto, Rialto and Balboa Coves channels, and the West Lido Channel (from sediment sampling station 1-3 north to the Lido Bridge) or from within 1000 feet in any direction from sediment sampling station 1-5 (15th Street public pier). Conversely, there are scattered areas throughout the lower bay where dredging and beach nourishment are proposed, but the piers, docks and gangways are excluded because they are associated with commercial areas. The map submitted by the applicant and depicted in Exhibit 4 is intended to fully define the areas within Newport Bay to which this consistency certification and coastal development permit applies.

The proposed project includes areas of the harbor that are tidelands that were granted either to the City of Newport Beach or the County of Orange by the California State Lands Commission. The City of Newport Beach is the applicant. The County of Orange was invited, but declined to be co-applicant, but has authorized the City to act on its behalf. The proposal also includes submerged lands that are privately owned such as those lands within the coves at Dover Shores and the interior cove and surrounding channel of Linda Isle. These private lands are owned by homeowners associations. The private land owners were invited to join as co-applicants, but have declined.

**c. Dredging & Ocean Disposal**

The City of Newport Beach has submitted a consistency certification for maintenance dredging and ocean disposal of suitable material. Pursuant to CC-031-06, maintenance dredging of navigation channels to pre-existing dredge depths of up to 1,000 cubic yards of material per event may be dredged from under private, public, and commercial piers, docks, and floats between the U.S. Bulkhead Line and the U.S. Pierhead Line within the areas identified on Exhibit 4. The applicant states that the typical individual dredge project is 100 to 500 cubic yards, averaging 200 cubic yards, and occurs within an area approximately 30 feet wide and 80 to 100 feet long (Exhibit 2). Dredge material not suitable for beach nourishment but which is suitable for ocean disposal will be deposited at off-shore disposal sites LA-2 or LA-3. A maximum of 20,000 cubic yards of suitable dredge materials will be disposed off shore with no more than 1,000 cubic yards of ocean disposed material from any single dredge site. Any materials not suitable for beach nourishment or ocean disposal would require land disposal. This coastal development permit and consistency certification do not authorize land disposal. Any land disposal would require a separate consistency determination and/or coastal development permit, as appropriate. The applicant has modified their consistency certification (CC-031-06) to address Coastal Act issues. The modifications are described in the Special Conditions.

**d. Beach Nourishment**

Suitable material is proposed to be pumped from a hydraulic suction dredge via pipeline to deposition sites on the City's beaches that are present along the shoreline of Newport Bay. As proposed, suitable dredged material will be deposited for beach nourishment in the near shore area, or above the mean high tide line. There are 150 street ends and approximately 1,200 residential bulkheads where beach nourishment would occur. Where necessary, the sand will be spread mechanically to evenly distribute the sand over the deposition area. The maximum quantity of material that would be disposed at any one time and any single site would be 1000 cubic yards. In addition, the City will not conduct any disposal activities within 15 feet of any eelgrass bed.

The applicant has provided a baseline evaluation of the suitability of the dredge materials for beach nourishment. This report generally indicates that dredge materials within Newport Bay in the proposed project area are suitable for beach nourishment from a grain size suitability and chemical standpoint. These issues will be discussed in more detail below.

**e. Piers, docks, and gangways**

As noted above, the City has included a new program in the current proposal that would authorize the replacement of private, non-commercial piers, docks, and gangways either in-kind and in the existing alignment or within a different alignment, so long as that alignment complies with the City's existing Harbor Permit Policy as of October 2003, Harbor Design Criteria 2006 Edition and Harbor Standard Drawings 2005 Edition and where no "deviation", "exception" or approval of an "alternate" material, design, or method of construction is necessary from the City. Exhibit 3 provides the Standard Drawings noted above. In the majority of cases, the structures must comply with the existing U.S. Pierhead Line. However, the request also includes allowance for dock structures to be constructed seaward of the U.S. Pierhead Line for those dock structures which occur within the specifically identified geographic areas described in the City's Harbor Permit Policy under 'Bayward Location of Piers and Floats' adopted as of October 2003 and which were previously authorized to extend seaward of the U.S. Pierhead Line.

The Commission has a significant record of approval of these private, non-commercial piers, docks, and gangways that have been reviewed and approved by the City Harbor Resources Department, without modification. The Commission has authorized many hundreds of such projects since passage of the Coastal Act. For example, since the year 2000, the Commission has authorized in excess of 140 such projects on it's administrative calendar. These approvals are typically granted with eelgrass and Caulerpa taxifolia requirements, as well as water quality provisions that address construction-phase and post-construction phase aspects of the project. The current proposal would carry forward these requirements. The program includes initial review of each project by the City and then submittal to the Executive Director for final review and concurrence. If the Executive Director determines the proposal doesn't meet the program requirements, a separate authorization must be obtained from the Commission. The program excludes any project that is located within 15 feet of any eelgrass; such projects are not covered by the program and would require a separate authorization from the Commission. This would allow the Commission to continue to directly review potential eelgrass impacts and mitigation proposals.

## II. <u>Status Of Local Coastal Program</u>

The standard of review for federal consistency certifications is the policies of Chapter 3 of the Coastal Act, and not any Local Coastal Program (LCP) of the affected area. If the Commission certified the LCP and incorporated it into the California Coastal Management Program (CCMP), the LCP can provide guidance in applying Chapter 3 policies in light of local circumstances. If the

Commission has not incorporated the LCP into the CCMP, it cannot guide the Commission's decision, but it can provide background information. There is presently no certified LCP for the City of Newport Beach. Therefore, the Commission has not incorporated any LCP for the City of Newport Beach into the CCMP.

## III. Applicant's Consistency Certification

The City of Newport Beach has certified that the proposed project is consistent with the California Coastal Management Program.

## IV. Chapter 3 Policy Analysis of Coastal Development Permit and Consistency Certification

### a. Water Quality & Biological Resources

Section 30230 of the Coastal Act states:

> *Marine resources shall be maintained, enhanced, and where feasible, restored. Special protection shall be given to areas and species of special biological or economic significance. Uses of the marine environment shall be carried out in a manner that will sustain the biological productivity of coastal waters and that will maintain healthy populations of all species of marine organisms adequate for long-term commercial, recreational, scientific, and educational purposes.*

Section 30231 of the Coastal Act states:

> *The biological productivity and the quality of coastal waters, streams, wetlands, estuaries, and lakes appropriate to maintain optimum populations of marine organisms and for the protection of human health shall be maintained and, where feasible, restored through, among other means, minimizing adverse effects of waste water discharges and entrainment, controlling runoff, preventing depletion of ground water supplies and substantial interference with surface water flow, encouraging waste water reclamation, maintaining natural vegetation buffer areas that protect riparian habitats, and minimizing alteration of natural streams.*

Dredging and Beach Nourishment

The Coastal Act protects water quality resources of the coastal zone. Section 30231 of the Coastal Act provides, in part, that:

> *The biological productivity and the quality of coastal waters … appropriate to maintain optimum populations of marine organisms and for the protection of human health shall be maintained….*

One of the potential adverse effects from dredging, ocean disposal, and beach nourishment activities is the re-suspension and relocation of contaminants. Dredge material can contain elevated levels of heavy metals, pesticides, organics, and other pollutants. These contaminants usually are bound to finer grain material such as clay and silt. Pursuant to the requirements of the Corps and under the direction of the U.S. Environmental Protection Agency (EPA), the applicant conducted physical, chemical, and biological tests on the sediments within the proposed dredging areas of Newport Bay.

The Commission generally uses the federal standards and guidelines for evaluating the suitability of sediment for aquatic disposal. Contaminants of potential ecological concern (COPECS) included heavy metals, chemical analogues of the pesticide DDT, and polynuclear aromatic hydrocarbons (PAHs) (i.e. chemicals formed during the incomplete burning of coal, oil, gas and other organic substances)[1]. In some cases, the sediment chemistry occurs in a range where it may or may not be suitable for ocean disposal or beach nourishment purposes. In those situations, federal dredging standards require the applicant to conduct bioassay and bioaccumulation tests.

Samples were collected from 33 stations comprising six proposed dredging areas in Newport Bay in 2005 and these samples were subjected to a comprehensive suite of physical, chemical and biological (toxicity and bioaccumulation) tests as reported in Dredged Material Evaluation for the Renewal of Regional General Permit-54, Newport Beach California Final Draft (November 2005). The report provides information to determine the suitability of dredged material from these specific areas of Newport Bay for aquatic disposal at the federally-approved ocean disposal sites (LA-2 or LA-3) or for beach replenishment within Newport Bay. The bay sediments have varying levels of pollutants due to urban runoff and some past industrial uses of the bay, but testing has indicated for most of the bay (except areas such as the Rhine Channel and West Lido Channel discussed below), the levels of pollutants are low enough that the dredged material can be safely disposed at the ocean disposal sites or, where sand content is adequate, can be used to replenish beaches

[1] COPECS is a term of art used in the field of chemical testing

within the bay. In addition, toxicity and bioaccumulation tests show that the placing sediments at aquatic disposal or reuse sites will have no measurable impacts on coastal resources.

Several areas of the bay are excluded from the permit based on determinations of sediment contamination from previous activities (e.g., Rhine Channel) and based on recent discovery of elevated levels of mercury in the West Lido Channel area. The composite of ten core samples from Area 1 of the Dredged Material Evaluation report resulted in a mercury analysis of 0.82 mg/kg, more than double any of the other composites and approaching a level where bioaccumulation testing and risk assessment would be warranted. As a first step in evaluating the potential threat to aquatic life, the ten individual cores were each analyzed for mercury. Three of the individual cores exceeded 1.0 mg/kg (1.10, 1.64 and 3.47 mg/kg) leading the USEPA to require high resolution sampling and bioaccumulation testing for the sediments near those cores before ocean disposal would be considered. These mercury results are likely to be from isolated waste disposal activities (e.g. disposal of batteries, fluorescent lights or other mercury sources into the bay). Runoff from residential streets would not typically result in these levels of mercury or this pattern of mercury hotspots among much lower levels (the other seven cores ranged from 0.17 to 0.30 mg/kg).

Based on the need for higher resolution sampling, bioaccumulation testing and possible determinate of the source of the mercury, the sediments represented by these three cores (Sediment Sampling Stations 1-1, 1-2 and 1-5) have been removed from consideration by this permit. These areas include the West Lido Channel from Sediment Sampling Station 1-3 north to the Lido Bridge (this area includes Sediment Sampling Stations 1-1 and 1-2) and within 1000 feet in any direction from Sediment Sampling Station 1-5 (15th Street public pier).

The applicant is proposing to use dredged sediment for beach nourishment purposes where it has the appropriate sand content. The composition of beach replenishment material can affect the environment. Dredged and deposited sediments can be composed of sand as well as fine-grained material such as silt and clay. One concern relating to the amount of fines in beach nourishment sediment is that the nourishment effort can introduce a grain size that is not already part of the receiver beach environment. Another concern is turbidity associated with fines. Finally, contaminants such as those found in Newport Bay, generally are associated with sediments that are higher in silt or clay content and not associated with sand-sized material. Generally, this occurs because silt and clay particles have larger surface areas to which contaminants may attach.

The Commission has typically used 80% sand content as the lower limit for the use of dredged material for beach nourishment. However, in certain cases the Commission has authorized lower thresholds. For example, in its authorization of the prior dredging program in Newport Bay (CDP 5-99-282, as amended, and Consistency Certification No.s CC-078-99 and CC-077-01) the Commission authorized use of any material dredged under the program for beach nourishment in Newport Bay so long as the sand content of the dredged material and receiver beach were within 10% of one another. Another example is the opportunistic beach sand replenishment program in San Clemente (CDP 5-02-142) where the Commission authorized use of material with 75% sand content or greater (subject to certain time of year limitations to address turbidity).

In this case the applicant is proposing to use any sediment dredged from the approved dredging areas, that is comprised of 75% or more sand, for beach nourishment. Where the dredged sediment has a sand content between 75% and 80%, the applicant only proposes to use such

material for nourishment if the sand content of the dredged sediment and receiver beach are within 10% of one another.

As noted above, some of the sediment to be dredged is known to have contaminant levels elevated above natural conditions, but generally within the range of urbanized estuaries on the California coast. Bioaccumulation and toxicity testing has demonstrated that these contaminants are not biologically available and that the material is suitable for ocean disposal. The U.S. EPA has affirmatively stated that ocean disposal of sediments dredged from within the approved dredging areas is acceptable.

However, the suitability of these sediments for beach nourishment requires further analysis since the estuarine conditions differ from those at the ocean disposal sites. Based on the proposed beach nourishment requirements (more than 80 percent sand or more than 75% sand if the receiving beach is between 65% and 85% sand), dredged sediments used for beach replenishment will be similar in physical, chemical and biological properties to the beach sands and shallow subtidal sediments they will be supplementing. Dredged sediments with more than 75% sand (and subject to this permit) will only be found in areas of relatively high energy from tidal currents or small wind waves. Consequently dredged sediments that may be placed on the beach will only be found directly adjacent to the beaches and will only have an incrementally higher amount of silts and clays than the beaches.

Where core samples in potential dredging areas with moderately high sand content (such as Area 4b with 63% sand) were subjected to toxicity and bioaccumulation testing, they showed no toxicity or significant bioaccumulation. The cores with much lower sand content (10 to 40%) resulted in toxicity levels that were not significantly different than that found at reference sites. Consequently dredged sediments with more than 75% sand content are very unlikely to have adverse affects on estuarine aquatic organisms or to have an impact measurably different than the existing beach sands. In addition, the low levels of contaminants found in the sediment samples were well below human health screening levels published by the USEPA (USEPA Region IX Preliminary Remediation Goals, 2004).

Also, it should be noted that the sediment tests are very sensitive. The effects of exposure are measured by using organisms that live in and ingest the sediment. These tests have shown that mortality of these organisms exposed to sediments from the dredge sites is not statistically significantly different than the mortality of organisms exposed to a reference site. As is noted above, the U.S. EPA and Corps have found that the sediment to be dredged from the lower Newport Bay is suitable for ocean disposal. Given that the sediments are suitable for ocean disposal and understanding the sensitivity of the tests which determined that ocean disposal is acceptable, it is clear that use of these sediments for beach nourishment would not have any significant adverse effect upon biological resources on the beach.

However, in order to assure that water quality protection procedures are in place, the Commission imposes Special Conditions I.g and V.i which require the applicants to implement turbidity controls during dredging and disposal events, when necessary. In addition, Special Conditions I.g and V.i requires the permittees to comply with other water quality best management practices in order to protect water quality.

As conditioned, the Commission finds the proposed project consistent with Section 30231 of the Coastal Act. In addition, the Commission finds that with these measures, the proposed project will

not affect water quality resources of the coastal zone, and therefore, the project is consistent with the Water Quality policy of the CCMP.

Piers, Docks and Gangways

The proposed piers, docks and gangways will involve construction over and in coastal waters. Construction of any kind adjacent to or in coastal waters has the potential to impact marine resources. The Bay provides water oriented recreational activities and also serves as marine habitat.

Storage or placement of construction materials, debris, or waste in a location subject to erosion and dispersion or which may be discharged into coastal water via rain, surf, or wind would result in adverse impacts upon the marine environment that would reduce the biological productivity of coastal waters. For instance, construction debris entering coastal waters may cover and displace soft bottom habitat. In addition, the use of machinery in coastal waters not designed for such use may result in the release of lubricants or oils that are toxic to marine life. Sediment discharged into coastal waters may cause turbidity, which can shade and reduce the productivity of foraging avian and marine species ability to see food in the water column. In order to avoid adverse construction-related impacts upon marine resources, Special Condition No. I.g outlines construction-related requirements to provide for appropriate construction methods as well as the safe storage of construction materials and the safe disposal of construction debris.

Special Condition No. I.g requires that the applicant dispose of all demolition and construction debris at an appropriate location. This condition requires the applicant to incorporate silt curtains and/or floating booms when necessary to control turbidity and debris discharge. Divers shall remove any non-floatable debris not contained in such structures that sink to the ocean bottom as soon as possible.

The proposed piers, docks and gangways will allow for the long term berthing of boat(s). Some maintenance activities if not properly regulated could cause adverse impacts to the marine environment. Certain maintenance activities like cleaning and scraping of boats, improper discharges of contaminated bilge water and sewage waste, and the use of caustic detergents and solvents, among other things, are major contributors to the degradation of water quality within boating facilities.

To minimize the potential that maintenance activities would adversely affect water quality, the Commission imposes Special Condition No. II.d, which requires implementation of Best Management Practices to ensure the continued protection of water quality and marine resources. Such practices include proper boat cleaning and maintenance, management of solid and liquid waste, and management of petroleum products, all of which are associated with the long term berthing of the boat(s) (more thoroughly explained in the special condition).

Certain types of coatings on submerged structures (e.g. pilings) designed to protect structures against corrosion and other degradation can be toxic to marine life. For example, wood treatments such as creosote, have been shown to contribute polycyclic aromatic hydrocarbons (PAHs) to the marine environment at levels that may be toxic to marine organisms. Similarly, coatings for metal pilings, such as coal tar based epoxies, are of concern with regard to toxicity to marine organisms. Thus, in Newport Bay most new pilings that are installed are composed of concrete that don't have toxic coatings. In certain limited situations the City allows use of metal pilings where bay-bottom geologic conditions (e.g. shallow bedrock) necessitate their use. The City is proposing to exclude

the use of coal-tar based coatings on such pilings and to require use of a coating that isn't known to be toxic in the marine environment (e.g. NSP-120). Special Condition II.c implements this proposal.

Therefore, only as conditioned does the Commission find the proposed project consistent with Section 30230 and 30231 of the California Coastal Act. In addition, the Commission finds that with these measures, the proposed project will not affect water quality resources of the coastal zone, and therefore, the project is consistent with the Water Quality policy of the CCMP.

**b. Dredging and Fill of Coastal Waters**

The proposed dredging, offshore disposal and beach nourishment project includes the dredging of sediment from bay waters and either offshore aquatic disposal or placement of dredged material on the beach and below the mean high tide line (MHTL). The extraction of sediment from bay waters is dredging. In addition, the placement of any material below the MHTL is fill as defined by Section 30108.2 of the Coastal Act. The placement of pilings associated with piers, docks and gangways is also fill. Section 30233 of the Coastal Act allows dredging and filling of coastal waters or wetlands only where feasible mitigation measures have been provided to minimize adverse environmental effects, and for only the eight uses listed in Section 30233 of the Coastal Act, as follows:

> *(a) The diking, filling, or dredging of open coastal waters, wetlands, estuaries, and lakes shall be permitted in accordance with other applicable provisions of this division, where there is no feasible less environmentally damaging alternative, and where feasible mitigation measures have been provided to minimize adverse environmental effects, and shall be limited to the following:*
>
> *(1) New or expanded port, energy, and coastal-dependent industrial facilities, including commercial fishing facilities.*
>
> *(2) Maintaining existing, or restoring previously dredged, depths in existing navigational channels, turning basins, vessel berthing and mooring areas, and boat launching ramps.*
>
> *(3) In wetland areas only, entrance channels for new or expanded boating facilities; and in a degraded wetland, identified by the Department of Fish and Game pursuant to subdivision (b) Section 30411, for boating facilities if, in conjunction with such boating facilities, a substantial portion of the degraded wetland is restored and maintained as a biologically productive wetland. The size of the wetland area used for boating facilities, including berthing space, turning basins, necessary navigation channels, and necessary support service facilities, shall not exceed 25 percent of the degraded wetland.*
>
> *(4) In open coastal waters, other than wetlands, including streams, estuaries, and lakes, new or expanded boating facilities and the placement of structural pilings for public recreational piers that provide public access and recreational opportunities.*
>
> *(5) Incidental public service purposes, including but not limited to, burying cables and pipes or inspection of piers and maintenance of existing intake and outfall lines.*
>
> *(6) Mineral extraction, including sand for restoring beaches, except in environmentally sensitive areas.*

*(7) Restoration purposes.*

*(8) Nature study, aquaculture, or similar resource dependent activities.*

*(b) Dredging and spoils disposal shall be planned and carried out to avoid significant disruption to marine and wildlife habitats and water circulation. Dredge spoils suitable for beach replenishment should be transported for such purposes to appropriate beaches or into suitable long shore current systems.*

In this case, the proposed dredging and offshore disposal would occur in order to maintain existing and/or restore previously dredged depths in existing navigational channels, turning basins, and vessel berthing and mooring areas. Meanwhile, fill would result from the restoration of beaches where erosion has narrowed the prior width of the beach. The proposed development includes the dredging and either offshore disposal or beach nourishment of up to 20,000 cubic yards of sediment permit year. The volume of dredged material that is proposed for ocean disposal would not exceed 1,000 cubic yards for a completed individual dredging project. In addition, no more than 1,000 cubic yards of material is proposed to be disposed on the beach at one time in any single location. This proposed dredging and fill is allowable pursuant to Sections 30233(a)(2), 30233(a)(7) and 30233(b) of the Coastal Act.

Section 30233(a)(4) of the Coastal Act allows fill of open coastal waters for recreational boating purposes. The proposed pilings for piers, floats and gangways associated constitute a recreational boating facility. These facilities are proposed solely for boating related purposes. Thus, the pilings for piers, floats and gangways are an allowable use under Section 30233(a)(4).

Section 30233 of the Coastal Act also requires that the proposed dredging and fill of coastal waters be the least environmentally-damaging feasible alternative including the use of feasible mitigation measures to reduce adverse environmental effects. The City has proposed measures to ensure that the proposed project is the least environmentally-damaging feasible alternative and has included mitigation measures to avoid adverse effects on the marine environment.

The proposed dredging would only occur in previously dredged areas to restore previously dredged depths. There are no feasible alternatives to the proposed dredging which would restore the berthing areas at the subject sites and be less environmentally damaging. The proposed dredging would be minimized to a maximum of 1,000 cubic yards per dredging event. The applicants are proposing measures to minimize impacts from the dredging including avoiding eelgrass beds and avoiding any development in the areas of Upper Newport Bay (i.e. within the Upper Newport Bay Ecological Reserve) that could potentially disturb the breeding activities of sensitive bird species. Therefore, the proposed dredging is the least environmentally damaging feasible alternative.

The City considered at least three options for disposal of beach suitable material. The first option was the no project alternative. Under the no project alternative, no disposal would occur. Without a site to dispose of dredge material, dredging within Newport Bay could not occur. Without dredging, boat slips within the harbor would become silted and unusable. Silting of boat slips within the harbor would decrease the usefulness of the harbor for recreation oriented boating. Accordingly, the no project alternative would have an adverse impact upon boating related uses of coastal waters. In addition, without dredging, public beaches within the harbor could not be nourished with needed beach quality sand and would continue to erode.

The second option was to dispose of all dredge spoils at an upland location. Disposing beach quality dredge materials at an upland location would remove those materials from the shoreline sand supply. Therefore, this alternative would have an adverse impact on shoreline sand supply.

The third option is the proposed project which results in the use of beach quality dredge material for beach nourishment purposes. This option would avoid any adverse impacts upon shoreline sand supply by re-contributing beach suitable material toward beach nourishment projects. Under this alternative, the applicants are proposing several mitigation measures to mitigate any adverse effects the project may have upon water quality and sensitive marine resources. These measures include avoiding any disposal activities within 15 feet of any eelgrass bed. Accordingly, impacts to eelgrass will be avoided. The applicant is also proposing to conduct testing of any sediments planned for beach nourishment to ensure compatibility of that sediment for beach nourishment purposes. These measures will avoid impacts to sand supply and sensitive habitat resources. Additionally, the applicant has limited beach nourishment to 1,000 cubic yards per project, with a maximum total of 20,000 cubic yards of beach nourishment or offshore disposal per year. By limiting the scope of the project, the applicant's proposal will not have significant impacts on marine or estuarine waters.

The proposed piers, docks and gangways include the placement of pilings. The proposed program includes a requirement for engineering calculations to identify the minimum quantity and size of pilings necessary to anchor the boating facility securely (i.e. withstand the load and adequately support the boating use). Thus, the proposed project employs the minimum number and size of piles necessary to adequately support and secure the proposed boating facilities, thereby minimizing the amount of fill needed to support the proposed allowable use. With regard to mitigation, the proposed pilings will provide surface area that may be used as hold-fasts for a variety of marine organisms.

The Commission finds that the proposed dredging and fill associated with the proposal are associated with allowable uses and are the least environmentally-damaging feasible alternatives which includes feasible mitigation measures. Therefore, the Commission finds the proposed development is consistent with Section 30233(a) of the Coastal Act. In addition, the Commission finds that with these measures, the proposed project will not adversely affect resources of the coastal zone, and therefore, the project is consistent with the policies of the CCMP.

### c. Sand Supply

In regards to beach replenishment, Section 30233(b) of the Coastal Act requires that suitable dredge materials be transported to appropriate beaches for such purposes.

Section 30233(b) of the Coastal Act states, in relevant part:

> *…Dredge spoils suitable for beach replenishment should be transported for such purposes to appropriate beaches or into suitable long shore current systems.*

The applicant is proposing to use all beach suitable dredge material for beach nourishment purposes. In order to ensure that the materials proposed for beach nourishment are suitable for such purposes, the applicant has proposed to perform sediment testing to evaluate the physical characteristics of the materials. In order to ensure that such testing adequately characterizes and evaluates the physical characteristics of the proposed beach nourishment materials, the Commission imposes Special Condition III.g, which requires the applicants to perform testing consistent with approved testing methods. Special Condition III.g requires that grain size tests be conducted on at least 1 core taken from the dredging area and 1 core from the receiver beach (if beach disposal/nourishment will occur) for each project. The core depth shall be equivalent to the proposed dredging depth plus any over-dredging. Also, grain size data shall be reported to the nearest 1% for sand, silt, and clay consistent with the above referenced document. Since the grain size of bay sediments can vary over even a small area, the Commission found that at least 1 core is necessary to adequately characterize the grain size of the sediments being used for beach nourishment. In addition, Special Condition III.g requires the applicant to obtain and test the sediment grain size from at least 1 core from the receiver beach.

In order to ensure that only beach quality materials are used to nourish the beaches, Special Condition V.a requires that material utilized for beach nourishment shall have a sand content that is either equal to or greater than 80% sand or be between 75% and 80% and within 10% of the sand content of the receiver beach. Normally, the Commission has required that beach nourishment materials contain equal to or greater than 80% sand. However, Special Condition V.a also allows the placement of beach nourishment materials having less than an 80% sand content on a beach if the sand content of the nourishment material and receiver beach are within 10% of one another. A receiver beach core sample and grain size analysis is necessary to confirm that the nourishment material falls within these parameters. While allowing the use of this 10% deviation is not the Commission's standard practice, in this instance, the beach nourishment sites are harbor locations and there is expected to be a higher component of "fines" in the dredge materials and receiver beach sites. Therefore, in this instance, a match of the dredge and receiver sites within a 10% deviation is acceptable.

Furthermore, the Commission is accepting the chemical testing and analysis completed to date for the proposed project. As part of the application process, the City completed a detailed sampling program of the harbor. In this proposal, given the absence of industrial development in the area, the representative sampling is being accepted as sufficient without further investigation required for individual sites. The applicant is proposing a five (5) year duration for the consistency certification and permit. It is expected that any pollutants that may be become deposited in the sediment during the proposed authorization period would be generated by non-point sources and such urban runoff. The concentration of pollutants would not be expected to significantly change over the course of the five-year authorization.

The proposed use of dredged material for beach nourishment will partially mitigate the ongoing erosion of the City's harbor beaches, helping to protect recreational use of the beach and existing structures along the beach. Section 30233(b) of the Coastal Act encourages the use of dredged material for beach replenishment. As proposed and conditioned, the project will not have any adverse impacts on local sand supply. Therefore, the project is consistent with Section 30233(b) of the Coastal Act. In addition, the Commission finds that with these measures, the proposed project will not adversely affect resources of the coastal zone, and therefore, the project is consistent with the policies of the CCMP.

**d. Sensitive Habitats and Resources**

Section 30230 of the Coastal Act requires that marine resources shall be maintained, enhanced, and where feasible, restored. Section 30230 of the Coastal Act states:

> *Marine resources shall be maintained, enhanced, and where feasible, restored. Special protection shall be given to areas and species of special biological or economic significance. Uses of the marine environment shall be carried out in a manner that will sustain the biological productivity of coastal waters and that will maintain healthy populations of all species of marine organisms adequate for long-term commercial, recreational, scientific, and educational purposes.*

Section 30230 of the Coastal Act requires that marine resources be protected and that the use of the marine environment be carried out in a manner that will sustain the biological productivity of coastal waters. The proposed dredging and deposition of material above and below the mean high tide line may impact marine resources. Therefore, mitigation measures are necessary to protect the biological productivity of coastal waters.

In addition, Section 30233(b) of the Coastal Act states:

> *Dredging and spoils disposal shall be planned and carried out to avoid significant disruption to marine and wildlife habitats…*

Newport Bay contains habitat for a diverse variety of wildlife. For instance, there is salt marsh, tidal flats, sandy beach, subtidal mud seafloor, and open water habitat at various locations throughout the bay. Eelgrass and other sensitive vegetation are present in some locations. In addition, several sensitive and endangered bird species nest, breed and forage in these habitat areas. Upper Newport Bay is especially rich with sensitive habitat and wildlife. For instance, California least tern, Belding savannah sparrow, and light-footed clapper rail nest and breed in the Upper Newport Bay and then forage in the upper and lower bay.

The applicant has submitted biological assessments for Newport Bay. These studies indicate that eelgrass (Zostera marina) is present within Newport Bay, particularly around Balboa Island, Linda Isle, and Harbor Island, and elsewhere throughout the bay. Eelgrass typically grows at depths ranging from 0 feet to –15 feet Mean Lower Low Water. In some areas of Newport Harbor, such as along Balboa Island, eelgrass occurs at shallower depths. Eelgrass is generally found along the bulkheads and along sandy shorelines within the harbor. However, in locations where the bottom is shaded by docks and moored vessels, eelgrass does not grow due to inadequate light levels.

Eelgrass is considered worthy of protection because it functions as important habitat for a variety of fish and other wildlife, according to the Southern California Eelgrass Mitigation Policy (SCEMP)

adopted by the National Marine Fisheries Service (NMFS), the U.S. Fish and Wildlife Service (USFWS), and the California Department of Fish and Game (CDFG). For instance, eelgrass beds provide areas for fish egg laying, juvenile fish rearing, and water fowl foraging. Sensitive species, such as the California least tern, a federally listed endangered species, utilize eelgrass beds as foraging grounds.

Eelgrass beds and foraging California least tern can be adversely affected from increased turbidity in the water column caused by the proposed dredging and beach nourishment project. The tern uses sight to forage for small fish near the surface of the water. The increase in turbidity can interfere with this sight-based feeding. During nesting season, the terns must forage close to their nesting area so that they can bring food to their fledglings.

In order to minimize impacts caused by turbidity, the applicants are proposing to limit the size of each dredging and beach nourishment event and the total quantity of dredging and beach nourishment to occur yearly. For instance, the applicants are proposing to dredge no more than 1,000 cubic yards of sediment at any single dredging event. In addition, the applicant is proposing to limit beach nourishment to 1,000 cubic yards for any nourishment site. Finally, the applicants are proposing no more than 20,000 cubic yards of dredging and beach nourishment per year[2]. By limiting the dredging and beach nourishment to small events, the area of potential impact is also smaller. Accordingly, wildlife foraging for food in the water column would not need to go a significant distance to avoid areas that are affected by turbidity. Furthermore, the short duration of the events (typically a single day) would minimize the period of time that any one area would be impacted by turbidity. Finally, the 20,000 cubic yard per year cap ensures that the total area of the harbor which may be impacted by dredging and beach nourishment during any year is cumulatively small. Additionally, in order to assure that turbidity impacts are minimized, the Commission imposes Special Condition I.g.

In addition, without appropriate precautions, the dredging and beach nourishment may adversely affect eelgrass habitat. The potential impacts include direct loss of eelgrass beds by dredging and beach nourishment within the eelgrass habitat as well as degrading the quality of that resource by increasing turbidity in the water column. Direct losses to eelgrass beds could occur by the dredging itself or through burial from beach nourishment. In addition, construction equipment could scar the eelgrass bed through contact from the dredging vessel, dragging chains and anchors through the eelgrass bed and from propeller wash. The increase in suspended sediments caused by dredging and beach nourishment could decrease light penetration, deter small fish from using the protective habitat, and interfere with bird foraging.

The nesting, foraging, and breeding activities of the California least tern, Belding's savannah sparrow and light-footed clapper rail could also be directly affected by dredging and beach nourishment. Noise from construction equipment could disturb the birds. In addition, the dredging and beach nourishment could directly impact areas where these species forage. These impacts would only occur in the Upper Newport Bay Ecological Reserve where least tern, sparrow, and clapper rail nest and breed. These species forage in the lower bay too. However, the impact would only occur in the upper bay near nesting sites because these species need to forage near their nests during breeding season. Foraging within the lower bay would be infrequent to non-existent during the breeding season due to the distance between the nests in the upper bay and the foraging areas of the lower bay. In order to avoid these impacts, the applicants are proposing

[2] The cap is 20,000 cubic yards of dredging and 20,000 cubic yards of beach nourishment or ocean disposal in total.

to confine the proposed activities to the areas outside of the Upper Newport Bay Ecological Reserve.

Additionally, the National Marine Fisheries Service (NMFS) has recommended avoiding dredging and beach nourishment and construction of piers, docks and gangways within or near eelgrass habitat. Specifically, NMFS recommends a buffer zone between the dredging or disposal activity and any eelgrass beds. The buffer zone would prevent any direct impacts upon eelgrass due to the proposed development. Also a buffer would reduce indirect impacts to eelgrass due to turbidity. In response to this concern, the applicants have agreed to avoid development within 15 feet of any eelgrass bed. With this buffer zone, the activities approved by this consistency determination and coastal development permit will not have any direct impact upon this resource. The applicants have also proposed the following mitigation measures: marking the boundaries of any eelgrass beds within the project area prior to commencement of development; avoid anchoring near any eelgrass bed; and avoiding vessel transit over eelgrass beds during lower tides. Meanwhile, the Commission imposes Special Condition I.e to incorporate these and additional mitigation measures.

In addition to the above described measures and in order to protect eelgrass habitat, the applicants have proposed to prepare and submit to the Executive Director pre- and, where necessary, post- construction eelgrass surveys. The surveys will extend out to 30 feet from the footprint of the proposed projects to assure adequate monitoring. If any eelgrass is present within 15 feet of the project area, a separate permit and consistency certification would be sought to carry out the project. Even with the 15 foot buffer, inadvertent impacts are possible. Therefore, if any eelgrass is inadvertently impacted, the applicant is proposing to replace the impacted eelgrass at a 1.2:1 ratio on-site in accordance with the Southern California Eelgrass Mitigation Policy. However, such mitigation would necessitate further review by the Commission to assure its adequacy. Conditions implementing these provisions are imposed. As proposed and conditioned, the Commission finds the project consistent with the marine resource and sensitive habitat protection policies of the Coastal Act.

Presently, the applicant has submitted plans showing the general location where the projects would occur. However, this map does not show detailed scale of the specific project(s). The applicant has proposed to submit final plans with project level details prior to the commencement of any individual project. The plans are to be accompanied by the eelgrass and Caulerpa taxifolia surveys and sediment grain size analysis testing (where dredging and disposal would occur), among other details described above. The Commission implements this proposal through the special conditions.

The program is proposed with a 5-year term for the dredging and disposal activities and a 3 year term for the pilot pier, dock and gangway program. In order to implement the applicant's proposal, to ensure that the proposed project will not have any adverse impacts upon coastal resources, and to ensure that any changed circumstances are subject to Commission review, Special Condition I.h and I.i implements the proposed expiration. In addition, Special Condition III.f clarifies that material for beach nourishment approved under the permit is limited to that obtained pursuant to the federal consistency certification. This provision will ensure that dredge material from locations not approved by the Commission are not utilized for beach nourishment under the coastal development permit. Therefore, as proposed and conditioned to mitigate and avoid impacts to marine resources, the Commission find the proposed project is consistent with Sections 30230 and 30233(b) of the Coastal Act. In addition, the Commission finds that with these measures, the

proposed project will not adversely affect resources of the coastal zone, and therefore, the project is consistent with the policies of the CCMP.

**e. Caulerpa**

As noted above, eelgrass is a sensitive aquatic plant species which provides important habitat for marine life. Eelgrass grows in shallow sandy aquatic environments which provide plenty of sunlight. In the late 1990's, a non native and invasive aquatic plant species, Caulerpa taxifolia (herein C. taxifolia), was discovered in parts of Huntington Harbour (Emergency Coastal Development Permits 5-00-403-G and 5-00-463-G) which occupies similar habitat. C. taxifolia is a tropical green marine alga that is popular in the aquarium trade because of its attractive appearance and hardy nature. In 1984, this seaweed was introduced into the northern Mediterranean. From an initial infestation of about 1 square yard it grew to cover about 2 acres by 1989, and by 1997 blanketed about 10,000 acres along the coasts of France and Italy. Genetic studies demonstrated that those populations were from the same clone, possibly originating from a single introduction. This seaweed spreads asexually from fragments and creates a dense monoculture displacing native plant and animal species. In the Mediterranean, it grows on sand, mud and rock surfaces from the very shallow subtidal to about 250 ft depth. Because of toxins in its tissues, C. taxifolia is not eaten by herbivores in areas where it has invaded. The infestation in the Mediterranean has had serious negative economic and social consequences because of impacts to tourism, recreational diving, and commercial fishing[3].

Because of the grave risk to native habitats, in 1999 C. taxifolia was designated a prohibited species in the United States under the Federal Noxious Weed Act. In addition, in September 2001 the Governor signed into law AB 1334 which made it illegal in California for any person to sell, possess, import, transport, transfer, release alive in the state, or give away without consideration various Caulerpa species including C. taxifolia.

In June 2000, C. taxifolia was discovered in Aqua Hedionda Lagoon in San Diego County, and in August of that year an infestation was discovered in Huntington Harbor in Orange County. Genetic

---

[3] References

Meinesz, A. (Translated by D. Simberloff) 1999. Killer Algae. University of Chicago Press

Chisholm, J.R.M., M. Marchioretti, and J.M. Jaubert. Effect of low water temperature on metabolism and growth of a subtropical strain of Caulerpa taxifolia (Chlorophyta). Marine Ecology Progress Series 201:189-198

Ceccherelli, G. and F. Cinelli. 1999. The role of vegetative fragmentation in dispersal of the invasive alga Caulerpa taxifolia in the Mediterranean. Marine Ecology Progress Series 182:299-303

Smith C.M. and L.J. Walters. 1999. Fragmentation as a strategy for Caulerpa species: Fates of fragments and implications for management of an invasive weed. Marine Ecology 20:307-319.

Jousson, O., J. Pawlowski, L. Zaninetti, A. Meinesz, and C.F. Boudouresque. 1998. Molecular evidence for the aquarium origin of the green alga Caulerpa taxifolia introduced to the Mediterranean Sea. Marine Ecology Progress Series 172:275-280.

Komatsu, T. A. Meinesz, and D. Buckles. 1997. Temperature and light responses of the alga Caulerpa taxifolia introduced into the Mediterranean Sea. Marine Ecology Progress Series 146:145-153.

Gacia, E. C. Rodriquez-Prieto, O. Delgado, and E. Ballesteros. 1996. Seasonal light and temperature responses of Caulerpa taxifolia from the northwestern Mediterranean. Aquatic Botany 53:215-225.

Belsher, T. and A. Meinesz. 1995. Deep-water dispersal of the tropical alga Caulerpa taxifolia introduced into the Mediterranean. Aquatic Botany 51:163-169.

studies show that this is the same clone as that released in the Mediterranean. Other infestations are likely. Although a tropical species, C. taxifolia has been shown to tolerate water temperatures down to at least 50ºF. Although warmer southern California habitats are most vulnerable, until better information if available, it must be assumed that the whole California coast is at risk. All shallow marine habitats could be impacted.

In response to the threat that C. taxifolia poses to California's marine environment, the Southern California Caulerpa Action Team, SCCAT, was established to respond quickly and effectively to the discovery of C. taxifolia infestations in Southern California. The group consists of representatives from several state, federal, local and private entities. The goal of SCCAT is to completely eradicate all C. taxifolia infestations.

If C. taxifolia is present, any project that disturbs the bottom could cause its spread by dispersing viable tissue fragments. The proposed project would disturb the harbor bottom by dredging as well as disturb some submerged areas through the placement of sand for beach nourishment. Bay bottom disturbance will also occur during the removal and installation of pilings for piers and docks/floats. These activities could cause the dispersal of C. taxifolia through fragmentation. In addition, the C. taxifolia could be distributed to other parts of the bay or to the open ocean through transport of the dredge spoils to other locations for beach nourishment and ocean disposal. In order to assure that the proposed project does not cause the dispersal of C. taxifolia, the applicant is proposing to survey for the presence of C. taxifolia in the project area –in accordance with SCCAT protocols and has agreed not to commence the project if C. taxifolia is found in the project area. The applicant would apply to implement measures to eradicate C. taxifolia from the project area and could commence with the project once the eradication is complete. The Commission imposes Special Condition I.f to implement the applicants' proposal. Therefore, as proposed and conditioned to mitigate and avoid impacts to marine resources, the Commission finds the proposed project is consistent with Sections 30230 and 30233(b) of the Coastal Act. In addition, the Commission finds that with these measures, the proposed project will not adversely affect resources of the coastal zone, and therefore, the project is consistent with the policies of the CCMP.

### f. Recreation and Public Access

The proposed project is consistent with the following Coastal Act policies which encourage public access and recreational use of coastal areas.

Section 30210 of the Coastal Act states:

> *In carrying out the requirement of Section 4 of Article X of the California Constitution, maximum access, which shall be conspicuously posted, and recreational opportunities shall be provided for all the people consistent with public safety needs and the need to protect public rights, rights of private property owners, and natural resource areas from overuse.*

Section 30213 of the Coastal Act states:

> *Lower cost visitor and recreational facilities shall be protected, encouraged, and, where feasible, provided. Developments providing public recreational opportunities are preferred.*

Section 30221 of the Coastal Act states:

> *Oceanfront land suitable for recreational use shall be protected for recreational use and development unless present and foreseeable future demand for public or commercial recreational activities that could be accommodated on the property is already adequately provided for in the area.*

The proposed project will mitigate beach erosion and provide for the continuing and increased recreational use of the City street end beaches by the public. The proposed beach replenishment will increase the size of the beach and will provide a larger area for recreational use. In addition, the proposed project will allow for continued use of coastal waters for recreational boating.

The typical street end and bulkhead-fronting beach is 30 feet wide and does not provide a lot of space for recreational users to utilize the beach. The project will temporarily impact the use of some street end and bulkhead-fronting beaches during the deposition of the dredged material. However, the disposal activity will typically not exceed a single day. In addition, street end and bulkhead-fronting beaches on Newport Bay are not the primary recreational beaches. Instead, the wide sandy beaches on the oceanfront are more heavily used for this purpose. Also, for those users choosing to use street end or bulkhead-fronting beaches, alternative street end and bulkhead-fronting beaches are typically 300 to 500 feet away.

The proposed project will occur upon tidelands which are held in trust for the people of the State of California. Administration of a portion of Newport Bay was granted to the City of Newport Beach through a tidelands grant contained within AB1422 approved by the Governor of California on April 6, 1978 and filed with the Secretary of State on April 7, 1978. In general, the area granted consists of submerged and filled lands in the lower bay. Accordingly, the areas adjacent to Lido Isle, the Lido Peninsula, and Balboa Island are within the City's tidelands grant. Certain uses of tidelands are specified within the tidelands grant. Among those uses are those for "recreational purposes". The proposed dredging and beach nourishment would maintain and improve recreational use of State tidelands. Dredging, beach nourishment and piers, docks and gangways are uses consistent with the City's tidelands grant.

Meanwhile, some of the project area is located within State tidelands which were granted to the County of Orange (Statutes of 1919, chapter 526, page 1138). These areas are generally located around Harbor Isle, some portions of Linda Isle and within the Upper Newport Bay. The tidelands grant to the County does not authorize the County to dredge or nourish beaches within the grant area without prior approval from the CSLC. Such approval has been granted through a tidelands lease from CSLC.

In addition, there are some submerged lands within the project area which are owned in fee title by a private property owner. These areas are located in the channel between Linda Isle and the mainland, the cove within Linda Isle and the coves of the Dover Shores residential community. The private property owners were invited to join as co-applicants, but have not elected to join.

In order to assure that the proposed development is consistent with any applicable tidelands grant and any areas held in public trust or over which there is a public trust easement, the applicants have proposed to provide evidence –before commencement of development- from CSLC that either approval has been granted or that no approval is necessary. For the private property areas, the applicants have also proposed to provide evidence of legal ability to undertake development upon those lands and to comply with the conditions of the permit prior to commencement of development. In order to implement these proposals, the Commission imposes Special Condition I.c. Therefore, as proposed and conditioned, the Commission finds that the proposed project is consistent with Sections 30210, 30213 and 30221 of the Coastal Act. In addition, the Commission finds that with these measures, the proposed project will not adversely affect resources of the coastal zone, and therefore, the project is consistent with the policies of the CCMP.

**g. Hazards**

Section 30253 of the Coastal Act states, in part:

> *New development shall:*
>
> *(1) Minimize risks to life and property in areas of high geologic, flood, and fire hazard.*

The proposed development is located in an area subject to tidal action. The tidal environment is dynamic and there are risks associated with development in such areas. For instance, erosion has occurred at the subject beach ends and in front of the bulkheads where beach nourishment is proposed. The fact that the applicant is proposing beach nourishment to restore pre-existing beaches indicates that erosion does occur. However, the applicant is not proposing to increase erosion hazards by increasing the size of beaches beyond pre-existing conditions. Therefore, the proposed project minimizes this hazard.

However, the proposed development only offers a temporary solution to erosion that occurs at the street end beaches and in front of bulkheads. The applicants and all landowners need to be advised of the temporary nature of the proposed development. Therefore, the Commission imposes Special Condition I.c.viii, which requires the applicants and any landowners to acknowledge the temporary nature of the development and the benefits provided by the development. As conditioned, the Commission finds the proposed project is consistent with Section 30253 of the Coastal Act. In addition, the Commission finds that with these measures, the proposed project will not adversely affect resources of the coastal zone, and therefore, the project is consistent with the policies of the CCMP.

**h. Visual Resources**

Section 30251 of the Coastal Act states:

> *The scenic and visual qualities of coastal areas shall be considered and protected as a resource of public importance. Permitted development shall be sited and designed to protect views to and along the ocean and scenic coastal areas, to minimize the alteration of natural land forms, to be visually compatible with the character of surrounding areas, and, where feasible, to restore and enhance visual quality in visually degraded areas. New development in highly scenic areas such as those designated in the California Coastline Preservation and Recreation Plan prepared by the Department of Parks and Recreation and by local government shall be subordinate to the character of its setting.*

The proposed project includes the removal and construction of residentially associated piers, docks and gangways. These facilities project into the harbor and can create an adverse visual impact to and along the water if the proposed facilities are not consistent with the pattern of surrounding docks. The Commission has generally found that the U.S. Pierhead line established throughout the bay has adequately served to limit the encroachment of piers, docks and gangways into bay waters. In certain areas the Commission has allowed projections beyond U.S. Pierhead Line where such projections are consistent with the limitations on projections identified under 'Bayward Location of Piers and Floats' within the City of Newport Beach Harbor Permit Policy adopted as of October 2003 and which were previously authorized to extend seaward of the U.S. Pierhead Line. The proposed program incorporates these same limitations. Thus, the Commission finds the proposed project consistent with the visual resource protection policies of the Coastal Act. In addition, the Commission finds that with these measures, the proposed project will not adversely affect resources of the coastal zone, and therefore, the project is consistent with the policies of the CCMP.

### i. Local Coastal Program

The LUP for the City of Newport Beach was effectively certified on May 19, 1982. At the October 2005 Coastal Commission Hearing, the certified LUP was updated. As conditioned, the proposed development is consistent with Chapter 3 of the Coastal Act and with the certified Land Use Plan for the area. Approval of the project, as conditioned, will not prejudice the ability of the local government to prepare a Local Coastal Program that is in conformity with the provisions of Chapter 3.

### j. California Environmental Quality Act (CEQA)

As conditioned, there are no feasible alternatives or additional feasible mitigation measures available that would substantially lessen any significant adverse effect that the activity may have on the environment. Therefore, the Commission finds that the proposed project, as conditioned to mitigate the identified impacts, is the least environmentally damaging feasible alternative and can be found consistent with the requirements of the Coastal Act to conform to CEQA.

## APPENDIX A

### Other Approvals

1. City of Newport Beach, March 10, 2006.

### Substantive File Documents

2. City of Newport Beach Certified Land Use Plan
3. City of Newport Beach Harbor Permit Policy as of October 2003
4. City of Newport Beach Harbor Design Criteria 2006 Edition
5. City of Newport Beach Harbor Standard Drawings 2005 Edition
6. *Dredged Material Evaluation for the Renewal of Regional General Permit-54 Newport Beach, California Final Draft* prepared by Weston Solutions, Inc. dated November 2005.
7. Letter report by Weston Solutions, Inc. to City of Newport Beach with additional test results of mercury for areas 1-1 through 1-10 taken August 6, 2006
8. Proposed Regional General Permit (RGP) No. 54, U.S. Army Corps of Engineers File No. 200501233 DPS)
9. Coastal Development Permit 5-89-259 (City of Newport Beach).
10. Coastal Development Permit 5-86-130 (City of Newport Beach).
11. Coastal Development Permit 5-85-729 (City of Newport Beach).
12. Coastal Development Permit 5-99-282, as amended (City of Newport Beach & County of Orange)
13. Federal Consistency Certifications CC-078-99 and CC-077-01
14. Final Report: Distribution and Abundance of Eelgrass (Zostera marina) in Newport Bay, Orange County, California dated April 28, 2005 and prepared by Coastal Resources Management.
15. Letter from the Irvine Company to California Coastal Commission dated March 22, 2006 granting authorization for dredging and beach nourishment on property owned by Irvine Company located around Linda Isle
16. Letter from the Bay Island Club to California Coastal Commission dated February 3, 2005 granting authorization for dredging and beach nourishment on property owned by the Bay Island Club around Bay Isle.
17. Risk Disclaimer by City of Newport Beach dated March 20, 2006
18. E-mail from Brian Ross of the U.S. Environmental Protection Agency to Daniel Swenson of the U.S. Army Corps of Engineers dated February 6, 2006, giving preliminary concurrence with ocean disposal of dredged material within the bay based on the Weston Solutions report dated November 2005.


**EXHIBIT#1**
Page 1 of 1
Application Number:
**5-06-117/CC-031-06**
California Coastal Commission

CITY OF NEWPORT BEACH HARBOR APPLICATION NO. 175-904

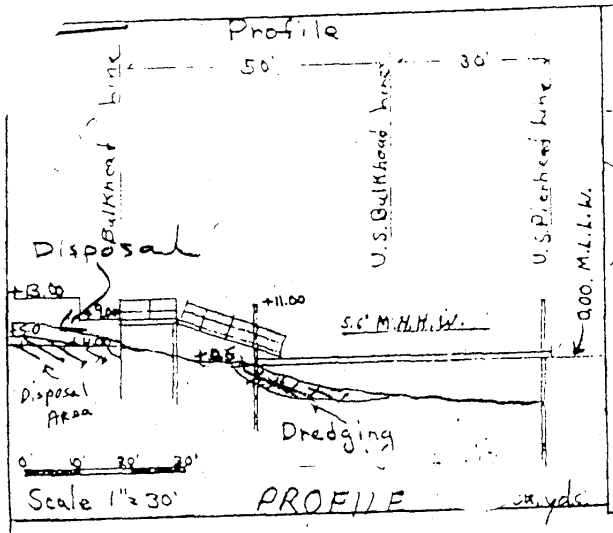


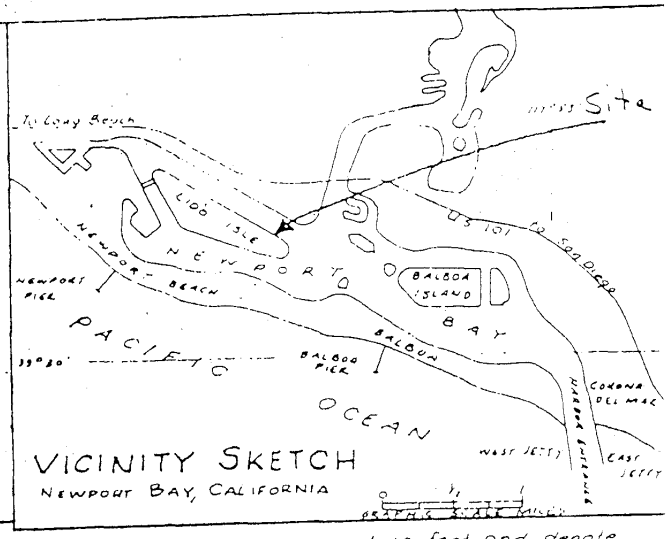


Soundings are expressed in feet and denote depths below Mean Lower Low Water. Maximum range of tide approximately 10 feet. Harbor lines are established in this section of Newport Bay.

332 cu yds

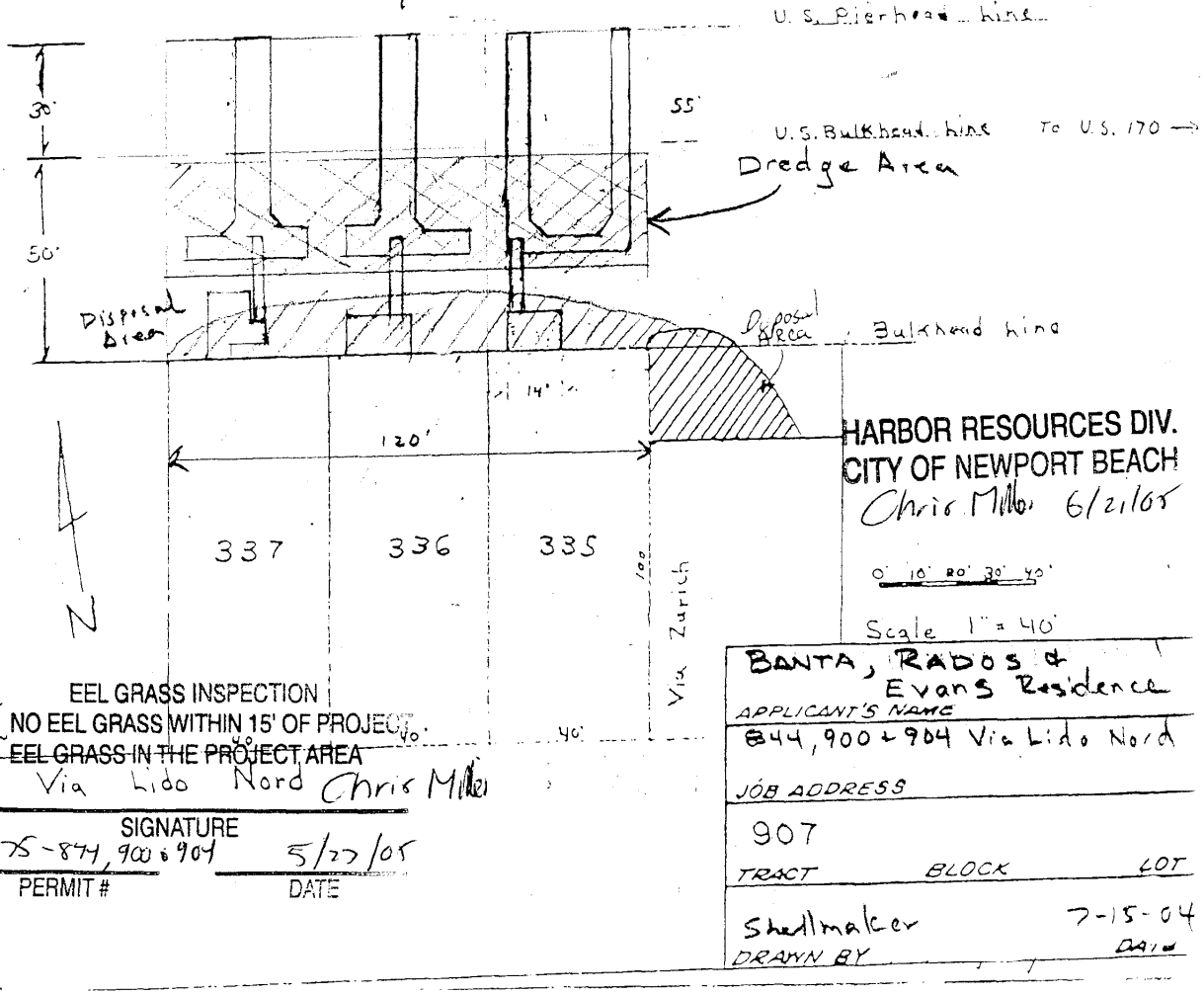


**EXHIBIT#2**
**Page 1 of 6**
Application Number:
**5-06-117/CC-031-06**
California Coastal Commission

**A Typical Dredging & Beach Nourishment Event**

**DAVID H. LEE & ASSOCIATES, INC.**
GEOTECHNICAL ENGINEERING ❖ ENGINEERING GEOLOGY

DHLA

DAVID H. LEE & ASSOCIATES
Primary Business Address
23011 Moulton Parkway
Suite D-11
Laguna Hills, California
92653
Phone: 949-461-5690
Fax: 949-461-7901
e-mail: dhla@dhla.com
http://www.dhla.com

DAVID H. LEE, P.E., G.E.
KEVIN J. CUNNINGHAM, P.G., C.E.G.
STEVEN J. MASTERSON, M.E.
DAVID D. HILL, P.G.

July 23, 2004

Ms. Lisa Miller
**SHELLMAKER, INC.**
2035-F Placentia Avenue
Costa Mesa, CA 92627

Our Project K04.110.00

**SUBJECT:** Phi Grain Size Test Results for the Soil Samples Obtained from the Banta, Rados & Evans Properties located at 844, 900 & 904 Via Lido Nord, Lido Isle, Newport Beach, California 92663.

Dear Ms. Miller:

Presented herewith are the results of our phi grain size analyses performed on the soil samples provided to us by your firm. The test procedures were in accordance with ASTM D 422-63 (1998) and U.S. Army Corps of Engineers Report Number CETA 79-7 criteria.

Please do not hesitate to call if you have any questions after you have reviewed the attached data.

Respectfully submitted,

*David H. Lee & Associates, Incorporated*

REGISTERED PROFESSIONAL ENGINEER
DAVID H. LEE
NO. GE 510
EXP. 3-31-06
GEOTECHNICAL
STATE OF CALIFORNIA

7/23/04

David H. Lee
Geotechnical Engineer

Attachments: Plates 1.1-1.2 -- Grain Size Summary
Plates 2.1-2.2 -- Cumulative Grain Size Distribution PHI Units

Distribution: Addressee (1)

\\Dhlam\Jerver data\PROJECTS\K04.110.00\K0411000_PHI_GS Letter.doc

**A Typical Dredging & Beach Nourishment Event**

**EXHIBIT#2**
**Page 2 of 6**
Application Number:
**5-06-117/CC-031-06**
California Coastal Commission

| | Sieve Opening (mm) | Particle Diameter in Phi Units | U.S. Standard Sieve Size | % Material Retained by Weight | Cumulative Percent Retained |
|---|---|---|---|---|---|
| Gravel | 38.1 | -5.25 | 11/2' | 0 | 0.0 |
| | 19 | -4.25 | 3/4" | 0 | 0.0 |
| | 9.5 | -3.25 | 3/8" | 0 | 0.0 |
| | 4.75 | -2.25 | 4 | 0.4 | 0.4 |
| | 2.83 | -1.50 | 7 | 0.2 | 0.6 |
| | 2 | -1.00 | 10 | 0.1 | 0.7 |
| Sand | 1.41 | -0.50 | 14 | 0.2 | 0.9 |
| | 1 | 0.00 | 18 | 0.7 | 1.6 |
| | 0.71 | 0.50 | 25 | 1.9 | 3.5 |
| | 0.5 | 1.00 | 35 | 8.7 | 12.2 |
| | 0.35 | 1.50 | 45 | 18.8 | 31.0 |
| | 0.25 | 2.00 | 60 | 29.9 | 61.0 |
| | 0.177 | 2.50 | 80 | 18.4 | 79.4 |
| | 0.125 | 3.00 | 120 | 13.3 | 92.7 |
| | 0.088 | 3.50 | 170 | 5.5 | 98.2 |
| | 0.075 | 3.75 | 200 | 0.7 | 98.9 |
| | 0.063 | 4.00 | 230 | 0.2 | 99.1 |
| Silt-Clay | <0.063 | <4.00 | <230 | 0.9 | 100 |

A sample was provided to David H. Lee & Associates, Incorporated in a sample bag by Shellmaker. The sample consists of a POORLY GRADED SAND (SP): pale brown (10YR 6/3); wet; fine to medium sand, trace shells. The sample was obtained from the Banta, Rados & Evans Properties, 844, 900 & 904 Via Lido Nord, Lido Isle, Newport Beach, California at a depth of +2.0 feet MLLW.

PHI GRAIN SIZE SUMMARY K041100.GPJ DHLA.GDT 7/23/04

DHLA
David H. Lee & Associates, Inc.
23011 Moulton Parkway, Suite D-11
Laguna Hills, CA 92653
Telephone: 949-461-5690
Fax: 949-461-7901

# PHI GRAIN SIZE SUMMARY

| CLIENT: SHELLMAKER, INC. | PROJECT: K04.110.00 | DATE: July, 2004 | PLATE 1.1 |
|---|---|---|---|

**A Typical Dredging & Beach Nourishment Event**

| | Sieve Opening (mm) | Particle Diameter in Phi Units | U.S. Standard Sieve Size | % Material Retained by Weight | Cumulative Percent Retained |
|---|---|---|---|---|---|
| Gravel | 38.1 | -5.25 | 11/2" | 0 | 0.0 |
| | 19 | -4.25 | 3/4" | 0 | 0.0 |
| | 9.5 | -3.25 | 3/8" | 0.2 | 0.2 |
| | 4.75 | -2.25 | 4 | 0.9 | 1.1 |
| | 2.83 | -1.50 | 7 | 0.5 | 1.6 |
| | 2 | -1.00 | 10 | 0.7 | 2.2 |
| Sand | 1.41 | -0.50 | 14 | 1.3 | 3.5 |
| | 1 | 0.00 | 18 | 3.3 | 6.8 |
| | 0.71 | 0.50 | 25 | 7.6 | 14.4 |
| | 0.5 | 1.00 | 35 | 25.5 | 39.9 |
| | 0.35 | 1.50 | 45 | 23.9 | 63.8 |
| | 0.25 | 2.00 | 60 | 15.7 | 79.5 |
| | 0.177 | 2.50 | 80 | 7.5 | 86.9 |
| | 0.125 | 3.00 | 120 | 4.3 | 91.3 |
| | 0.088 | 3.50 | 170 | 2.1 | 93.4 |
| | 0.075 | 3.75 | 200 | 0.4 | 93.8 |
| | 0.063 | 4.00 | 230 | 0.3 | 94.0 |
| Silt-Clay | <0.063 | <4.00 | <230 | 6.0 | 100 |

A sample was provided to David H. Lee & Associates, Incorporated in a sample bag by Shellmaker. The sample consists of a POORLY GRADED SAND (SP): brown to dark brown (10YR 4/3); wet; fine to medium graded sand, scattered seashells and shell fragments. The sample was obtained from the Banta, Rados & Evans Properties, 844, 900 & 904 Via Lido Nord, Lido Isle, Newport Beach, California at a depth of -3.0 feet MLLW.

PHI GRAIN SIZE SUMMARY K041000.GPJ DHLA.GDT 7/23/04

DHLA

David H. Lee & Associates, Inc.
23011 Moulton Parkway, Suite D-11
Laguna Hills, CA 92653
Telephone: 949-461-5690
Fax: 949-461-7901

# PHI GRAIN SIZE SUMMARY

| CLIENT: SHELLMAKER, INC. | PROJECT: K04.110.00 | DATE: July, 2004 | PLATE 1.2 |
|---|---|---|---|

**EXHIBIT#2**
**Page 4 of 6**
Application Number:
**5-06-117/CC-031-06**
California Coastal Commission

**A Typical Dredging & Beach Nourishment Event**

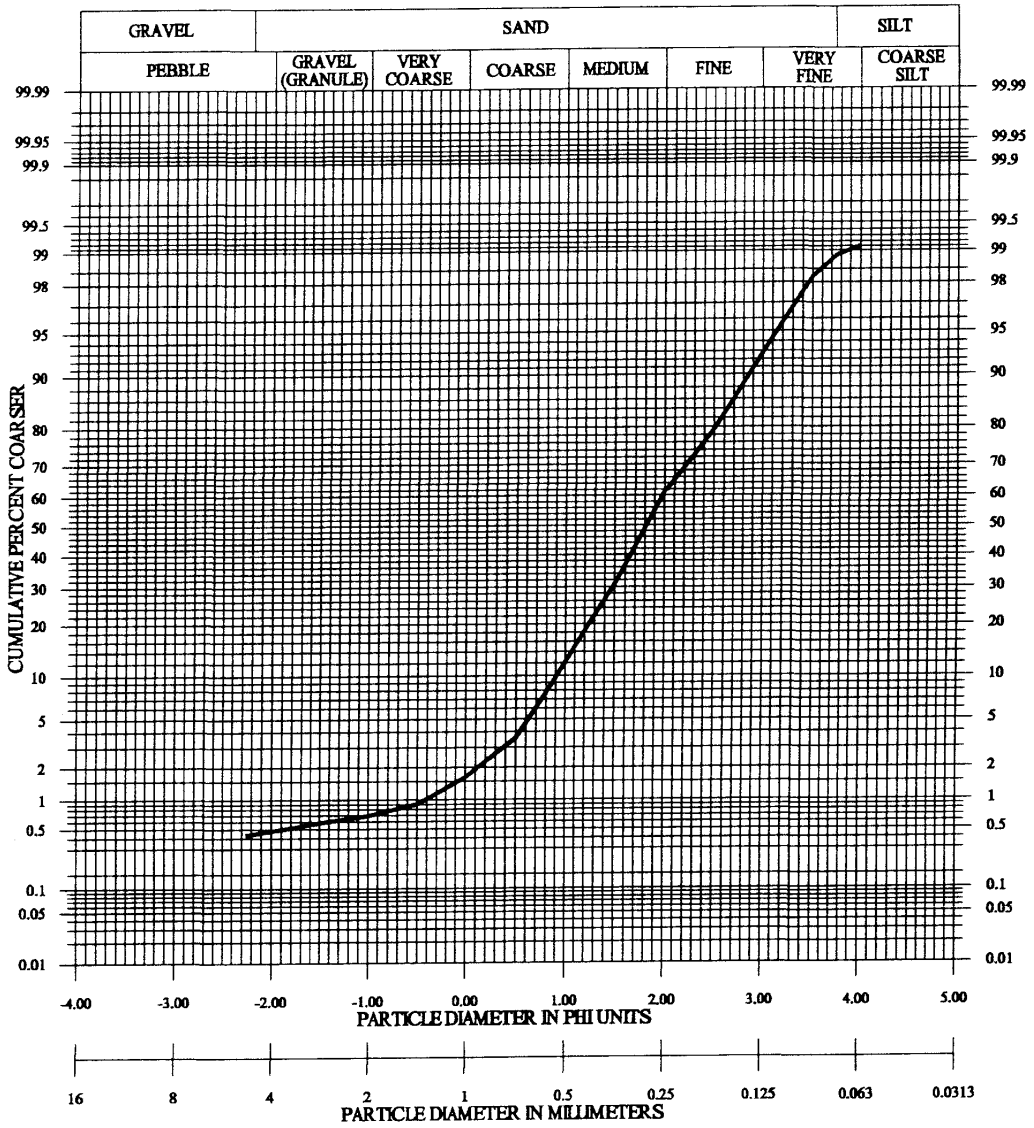


MEDIAN = 1.83 Φ

MEAN = 1.88 Φ

SAMPLE LOCATION: BANTA, RADOS & EVANS PROPERTIES
844, 900 & 904 VIA LIDO NORD
NEWPORT BEACH, CALIFORNIA

0.7% GRAVEL

98.4% SAND

0.9% SILT-CLAY

DAVID H. LEE & ASSOCIATES, INC.
GEOTECHNICAL ENGINEERING * ENGINEERING GEOLOGY
23011 Moulton Parkway * Suite D-11 * Laguna Hills * California
Phone (949) 461-5690 * Fax (949) 461-7901 * email: dhla@dhla.com
DHLA

FOR: SHELLMAKER, INC.

CUMULATIVE GRAIN SIZE DISTRIBUTION PHI UNITS

PROJECT: K04.110.00 JULY, 2004

PLATE 2.1

**EXHIBIT#2**
**Page 5 of 6**
Application Number:
**5-06-117/CC-031-06**
California Coastal Commission

**A Typical Dredging & Beach Nourishment Event**

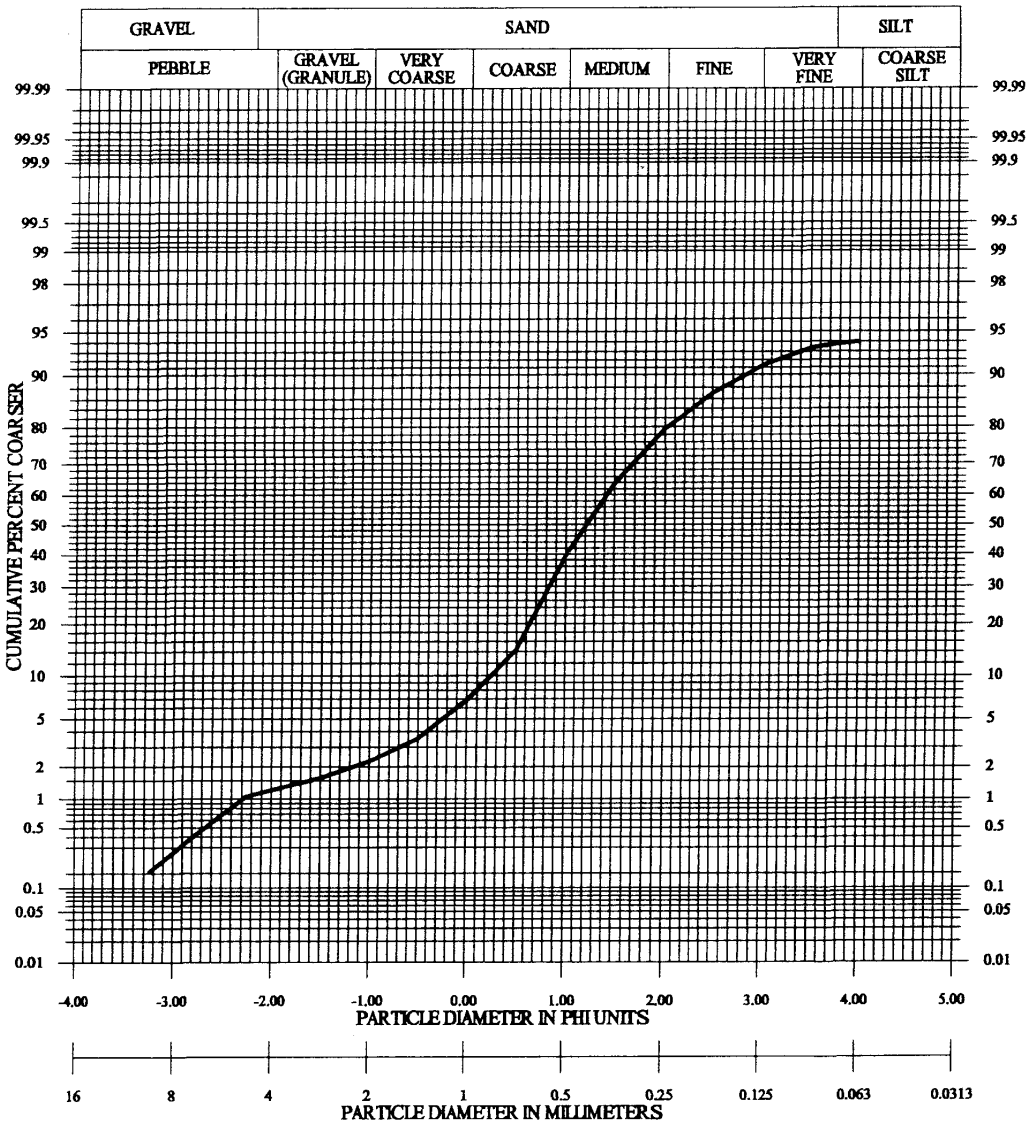


MEDIAN = 1.23 ϕ

MEAN = 1.43 ϕ

SAMPLE LOCATION: BANTA, RADOS & EVANS PROPERTIES
844, 900 & 904 VIA LIDO NORD
NEWPORT BEACH, CALIFORNIA

2.2% GRAVEL

91.8% SAND

6.0% SILT-CLAY

DAVID H. LEE & ASSOCIATES, INC.
GEOTECHNICAL ENGINEERING * ENGINEERING GEOLOGY
23011 Moulton Parkway * Suite D-11 * Laguna Hills * California
Phone (949) 461-5690 * Fax (949) 461-7901 * email: dhla@dhla.com

FOR: SHELLMAKER, INC.

CUMULATIVE GRAIN SIZE DISTRIBUTION PHI UNITS

PROJECT: K04.110.00 JULY, 2004

PLATE

2.2

**EXHIBIT#2**
**Page 6 of 6**
Application Number:
**5-06-117/CC-031-06**
California Coastal Commission

**A Typical Dredging & Beach Nourishment Event**

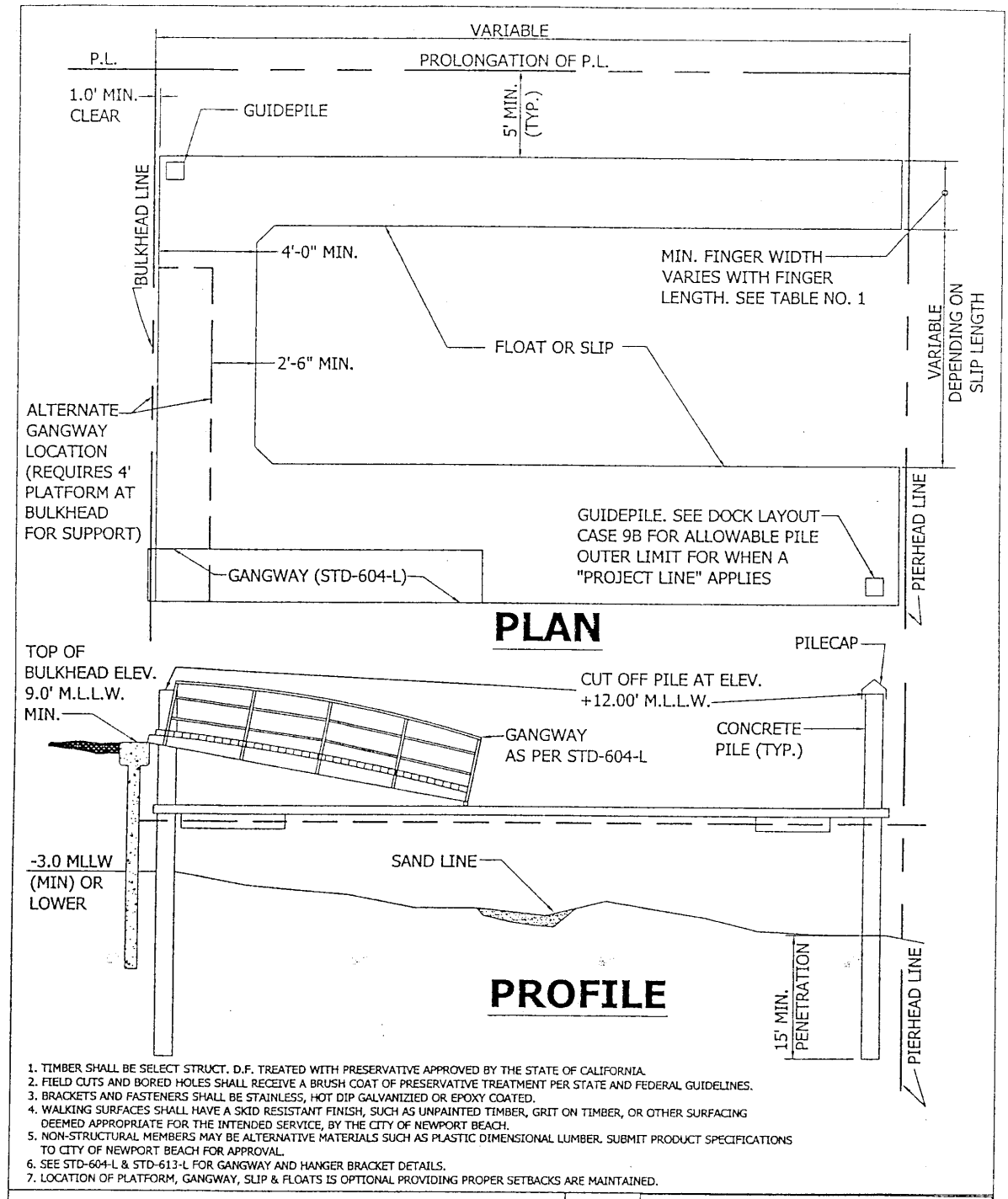


1. TIMBER SHALL BE SELECT STRUCT. D.F. TREATED WITH PRESERVATIVE APPROVED BY THE STATE OF CALIFORNIA.
2. FIELD CUTS AND BORED HOLES SHALL RECEIVE A BRUSH COAT OF PRESERVATIVE TREATMENT PER STATE AND FEDERAL GUIDELINES.
3. BRACKETS AND FASTENERS SHALL BE STAINLESS, HOT DIP GALVANIZIED OR EPOXY COATED.
4. WALKING SURFACES SHALL HAVE A SKID RESISTANT FINISH, SUCH AS UNPAINTED TIMBER, GRIT ON TIMBER, OR OTHER SURFACING DEEMED APPROPRIATE FOR THE INTENDED SERVICE, BY THE CITY OF NEWPORT BEACH.
5. NON-STRUCTURAL MEMBERS MAY BE ALTERNATIVE MATERIALS SUCH AS PLASTIC DIMENSIONAL LUMBER. SUBMIT PRODUCT SPECIFICATIONS TO CITY OF NEWPORT BEACH FOR APPROVAL.
6. SEE STD-604-L & STD-613-L FOR GANGWAY AND HANGER BRACKET DETAILS.
7. LOCATION OF PLATFORM, GANGWAY, SLIP & FLOATS IS OPTIONAL PROVIDING PROPER SETBACKS ARE MAINTAINED.

| | |
|---|---|
| CITY OF NEWPORT BEACH<br>BUILDING DEPARTMENT | APPROVED:<br>BUILDING DIRECTOR |
| SINGLE RESIDENTIAL USE<br>FLOAT WITHOUT PIER | Drawn: R OKADA<br>Date: JULY 2004<br>Scale: N.T.S.<br>DRAWING NO. STD-605-L |

**Typical Residential Pier, Dock/Float, Gangway Layouts**

**EXHIBIT# 3**
**Page 1 of 5**
Application Number:
**5-06-117/CC-031-06**
California Coastal Commission

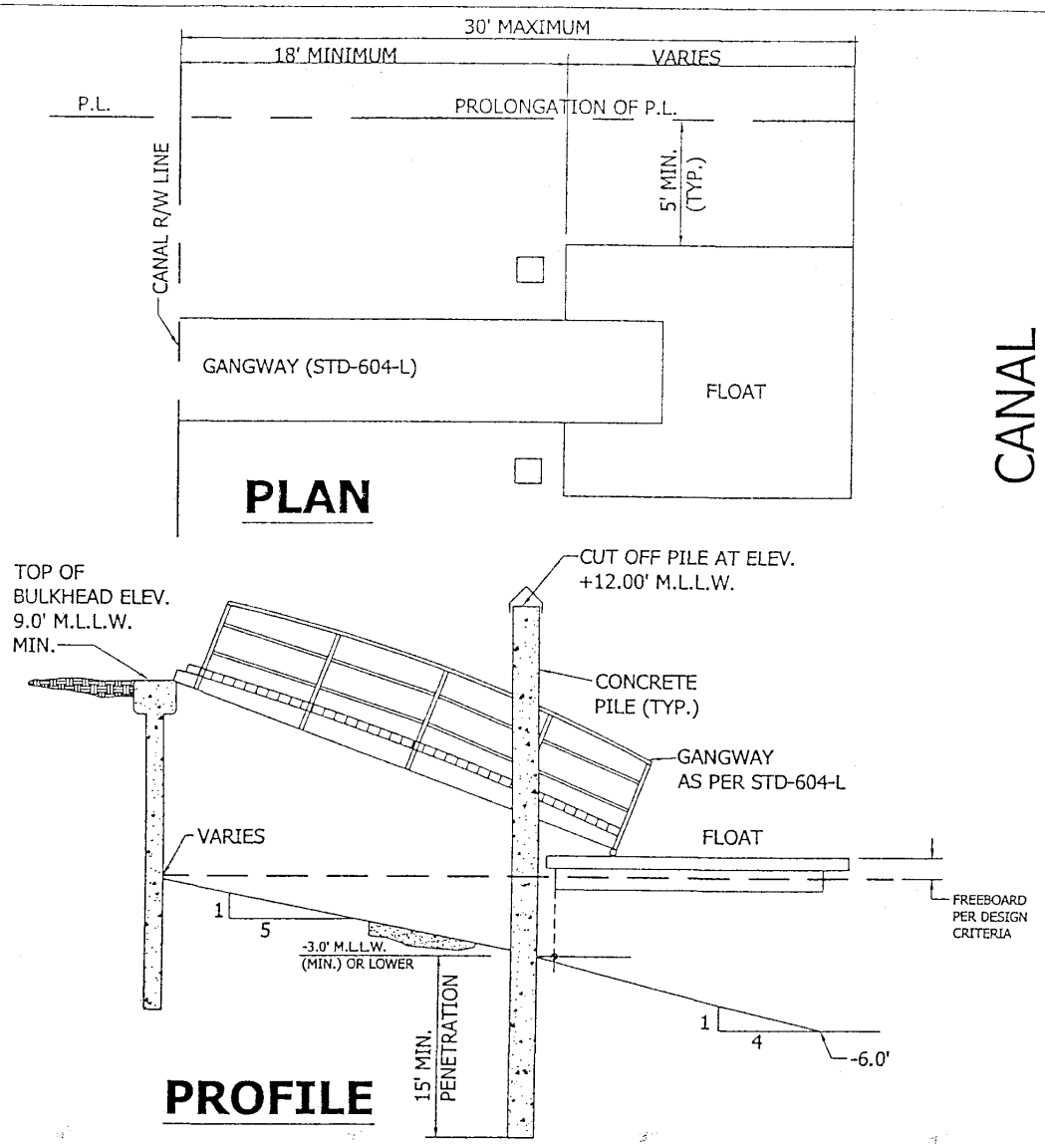


1. TIMBER SHALL BE SELECT STRUCT. D.F. TREATED WITH PRESERVATIVE APPROVED BY THE STATE OF CALIFORNIA.
2. FIELD CUTS AND BORED HOLES SHALL RECEIVE A BRUSH COAT OF PRESERVATIVE TREATMENT PER STATE AND FEDERAL GUIDELINES.
3. BRACKETS AND FASTENERS SHALL BE STAINLESS, HOT DIP GALVANIZIED OR EPOXY COATED.
4. WALKING SURFACES SHALL HAVE A SKID RESISTANT FINISH, SUCH AS UNPAINTED TIMBER, GRIT ON TIMBER, OR OTHER SURFACING DEEMED APPROPRIATE FOR THE INTENDED SERVICE, BY THE CITY OF NEWPORT BEACH.
5. NON-STRUCTURAL MEMBERS MAY BE ALTERNATIVE MATERIALS SUCH AS PLASTIC DIMENSIONAL LUMBER. SUBMIT PRODUCT SPECIFICATIONS TO CITY OF NEWPORT BEACH FOR APPROVAL.
6. SEE STD-609-L & STD-612-L FOR GANGWAY AND HANGER BRACKET DETAILS.
7. LOCATION OF PLATFORM, GANGWAY, SLIP & FLOATS IS OPTIONAL PROVIDING PROPER SETBACKS ARE MAINTAINED.

| | |
|---|---|
| CITY OF NEWPORT BEACH<br>BUILDING DEPARTMENT | APPROVED:<br>BUILDING DIRECTOR |
| SINGLE RESIDENTIAL USE FLOAT<br>WEST NEWPORT CHANNELS | Drawn: R OKADA<br>Date: JULY 2004<br>Scale: N.T.S.<br>DRAWING NO. STD-606-L |

**EXHIBIT# 3**
**Page 2 of 5**
Application Number:
**5-06-117/CC-031-06**
California Coastal Commission

**Typical Residential Pier, Dock/Float, Gangway Layouts**

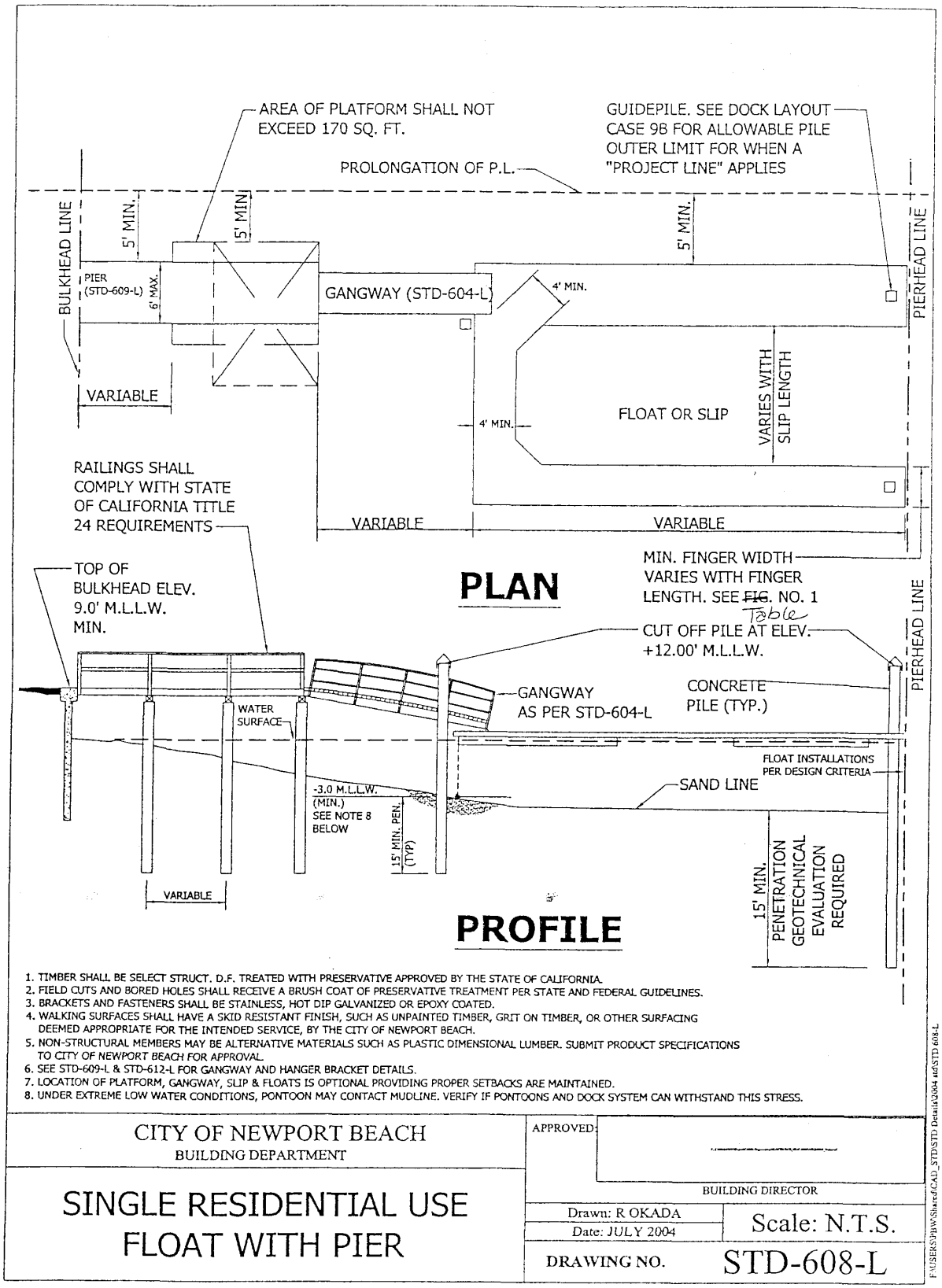


1. TIMBER SHALL BE SELECT STRUCT. D.F. TREATED WITH PRESERVATIVE APPROVED BY THE STATE OF CALIFORNIA.
2. FIELD CUTS AND BORED HOLES SHALL RECEIVE A BRUSH COAT OF PRESERVATIVE TREATMENT PER STATE AND FEDERAL GUIDELINES.
3. BRACKETS AND FASTENERS SHALL BE STAINLESS, HOT DIP GALVANIZED OR EPOXY COATED.
4. WALKING SURFACES SHALL HAVE A SKID RESISTANT FINISH, SUCH AS UNPAINTED TIMBER, GRIT ON TIMBER, OR OTHER SURFACING DEEMED APPROPRIATE FOR THE INTENDED SERVICE, BY THE CITY OF NEWPORT BEACH.
5. NON-STRUCTURAL MEMBERS MAY BE ALTERNATIVE MATERIALS SUCH AS PLASTIC DIMENSIONAL LUMBER. SUBMIT PRODUCT SPECIFICATIONS TO CITY OF NEWPORT BEACH FOR APPROVAL.
6. SEE STD-609-L & STD-612-L FOR GANGWAY AND HANGER BRACKET DETAILS.
7. LOCATION OF PLATFORM, GANGWAY, SLIP & FLOATS IS OPTIONAL PROVIDING PROPER SETBACKS ARE MAINTAINED.
8. UNDER EXTREME LOW WATER CONDITIONS, PONTOON MAY CONTACT MUDLINE. VERIFY IF PONTOONS AND DOCK SYSTEM CAN WITHSTAND THIS STRESS.

CITY OF NEWPORT BEACH
BUILDING DEPARTMENT

APPROVED:

BUILDING DIRECTOR

SINGLE RESIDENTIAL USE
FLOAT WITH PIER

Drawn: R OKADA
Date: JULY 2004
Scale: N.T.S.
DRAWING NO. STD-608-L

F:\USERS\PHW\Shared\CAD_STD\STD Details\2004 std\STD 608-L

**EXHIBIT# 3**
**Page 3 of 5**
Application Number:
**5-06-117/CC-031-06**
California Coastal Commission

**Typical Residential Pier, Dock/Float, Gangway Layouts**

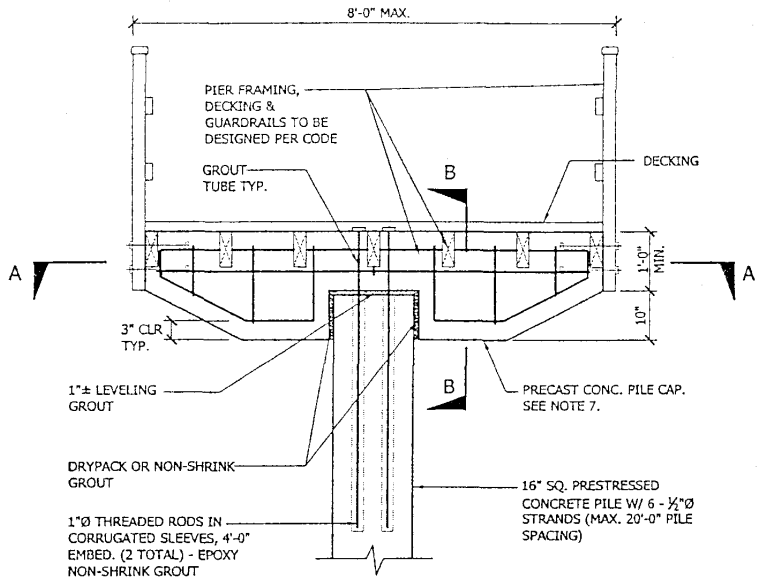


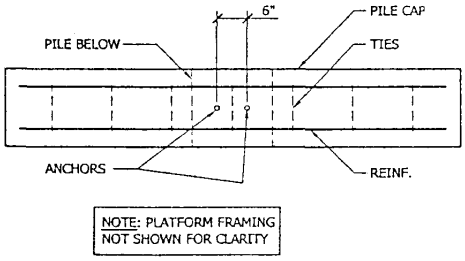


SECTION A-A

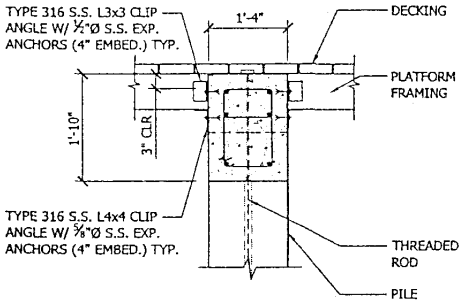


SECTION B-B

NOTES:

1. CONCRETE SHALL HAVE MINIMUM f'c = 6,000 PSI. PRESTRESSING STRANDS SHALL HAVE A MINIMUM fpu = 270 KSI.
2. ALL TIMBER SHALL BE TREATED PER ACCEPTED STATE OF CALIFORNIA REQUIREMENTS.
3. BRACKETS AND FASTENERS FOR TIMBER FRAMING SHALL BE HOT-DIP GALVANIZED, EPOXY-COATED OR STAINLESS STEEL. CONNECTORS TO BE ¼" MIN. THICKNESS, UNLESS OTHERWISE NOTED.
4. WALKING SURFACES SHALL BE SKID-RESISTANT.
5. ALL TIMBER PLATFORM FRAMING AND RAILINGS SHALL BE DESIGNED BY A LICENSED ENGINEER AND ARE NOT DETAILED IN THIS STANDARD.
6. TIMBER STRINGER SPLICES ARE NOT PERMITTED BETWEEN PILES.
7. OPTIONAL CAST-IN-PLACE CONSTRUCTION IS ACCEPTABLE. IF SO, LEVELING GROUT AND DRYPACK OR NON-SHRINK GROUT ILLUSTRATION WOULD NOT BE REQUIRED.
8. AN ENGINEER LICENSED IN THE STATE OF CALIFORNIA SHALL VERIFY PILE SIZE AND TYPE, AS WELL AS EMBEDMENT.

TYPICAL PIER SECTION
SCALE: N.T.S.

CITY OF NEWPORT BEACH
BUILDING DEPARTMENT

APPROVED:

BUILDING DIRECTOR

TYPICAL PIER SECTION

Drawn: ---
Date: AUG 2004
Scale: N.T.S.
DRAWING NO. STD-610-L.1

G:\Projects\Rom\666000 City NP Beach\Drawings\C&A Edits - Details - Aug04\STD 610-L1.dwg

**EXHIBIT# 3**
**Page 4 of 5**
Application Number:
**5-06-117/CC-031-06**
California Coastal Commission

**Typical Residential Pier, Dock/Float, Gangway Layouts**

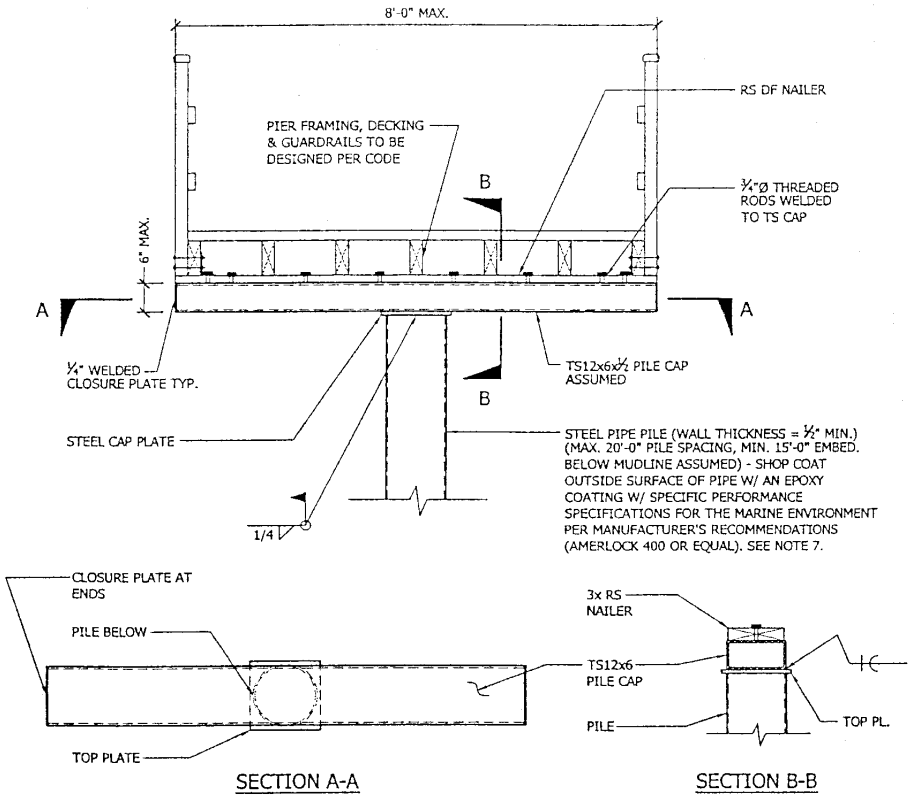


NOTES:

1. ALL STEEL COMPONENTS SHALL BE MINIMUM ASTM A36 (MIN. Fy = 36 KSI). ALL STEEL PIPE PILES SHALL BE ASTM A53, GR B MATERIAL (MIN. Fy = 35 KSI).
2. ALL TIMBER SHALL BE TREATED PER ACCEPTED STATE OF CALIFORNIA REQUIREMENTS.
3. BRACKETS AND FASTENERS FOR TIMBER FRAMING SHALL BE HOT-DIP GALVANIZED, EPOXY-COATED OR STAINLESS STEEL. CONNECTORS TO BE ¼" MIN. THICKNESS.
4. WALKING SURFACES SHALL HAVE A SKID-RESISTANT FINISH, SUCH AS UNPAINTED TIMBER.
5. ALL TIMBER PLATFORM FRAMING AND RAILINGS SHALL BE DESIGNED BY A LICENSED ENGINEER AND ARE NOT DETAILED IN THIS STANDARD.
6. TIMBER STRINGER SPLICES ARE NOT PERMITTED BETWEEN PILES.
7. NO COATING ON STEELWORK 4" FROM WELDED PARTS (PILE AND CAP) TO ALLOW FOR FIELD WELDING. TOUCH-UP THIS UNCOATED AREA AFTER FABRICATION PER MANUFACTURERS RECOMMENDATIONS, INCLUDING SURFACE PREPARATION. IF PILES REQUIRE CUT-OFF DUE TO SUFFICIENT BLOW COUNTS PRIOR TO OBTAINING TIP ELEVATION, REMOVE COATING IN UPPER 4" OF PILE TO ALLOW FIELD WELDING.
8. FOR ADDITIONAL CORROSION RESISTANCE, THE APPLICANT MAY WISH TO CONSIDER INSTALLING A PASSIVE OR ACTIVE CATHODIC PROTECTION SYSTEM.
9. AN ENGINEER LICENSED IN THE STATE OF CALIFORNIA SHALL VERIFY PILE SIZE AND TYPE, AS WELL AS EMBEDMENT.

TYPICAL PIER SECTION
(OPTION AT LOCATIONS OF SHALE AND/OR HARD SUBSURFACE MATERIALS NOT SUITABLE FOR CONCRETE PILES)
SCALE: N.T.S.

CITY OF NEWPORT BEACH
BUILDING DEPARTMENT

APPROVED:

BUILDING DIRECTOR

TYPICAL PIER SECTION (ALTERNATE)

Drawn: —
Date: AUG 2004
Scale: N.T.S.
DRAWING NO. STD-610-L.2

G:\Projects\Rtm\606000 City NP Beach\Drawings\C&A Edits - Details - Aug04\STD 6x-L1.dwg

**EXHIBIT# 3**
**Page 5 of 5**
Application Number:
**5-06-117/CC-031-06**
California Coastal Commission

**Typical Residential Pier, Dock/Float, Gangway Layouts**


**EXHIBIT#4**
**Page 1 of 3**
Application Number:
**5-06-117/CC-031-06**
California Coastal Commission


**EXHIBIT#4**
**Page 2 of 3**
Application Number:
**5-06-117/CC-031-06**
California Coastal Commission


**EXHIBIT#4**
**Page 3 of 3**
Application Number:
**5-06-117/CC-031-06**
California Coastal Commission