CALIFORNIA COASTAL COMMISSION
South Coast Area Office
301 E. Ocean Blvd. Suite 300
Long Beach, CA 90802-4302
(562) 590-5071

Th13a

CDP 5-18-1259 (LA COUNTY DEPT. OF PUBLIC WORKS

MARCH 11, 2021

EXHIBITS

Exhibit 1—Vicinity Map

Exhibit 2—Aerial Site Plan

Exhibit 3 – Plans

Exhibit 4 -- CCC Emergency Permit G-5-19-0045

Figure 1

Regional Project Location

Figure 2

Project Location

COUNTY OF LOS ANGELES
DEPARTMENT OF PUBLIC WORKS

PROJECT NO. 450 - ALAMITOS BAY PUMP STATION, DISCHARGE LINE REPLACEMENT PROJECT

PROJECT ID NO. FCC0001218

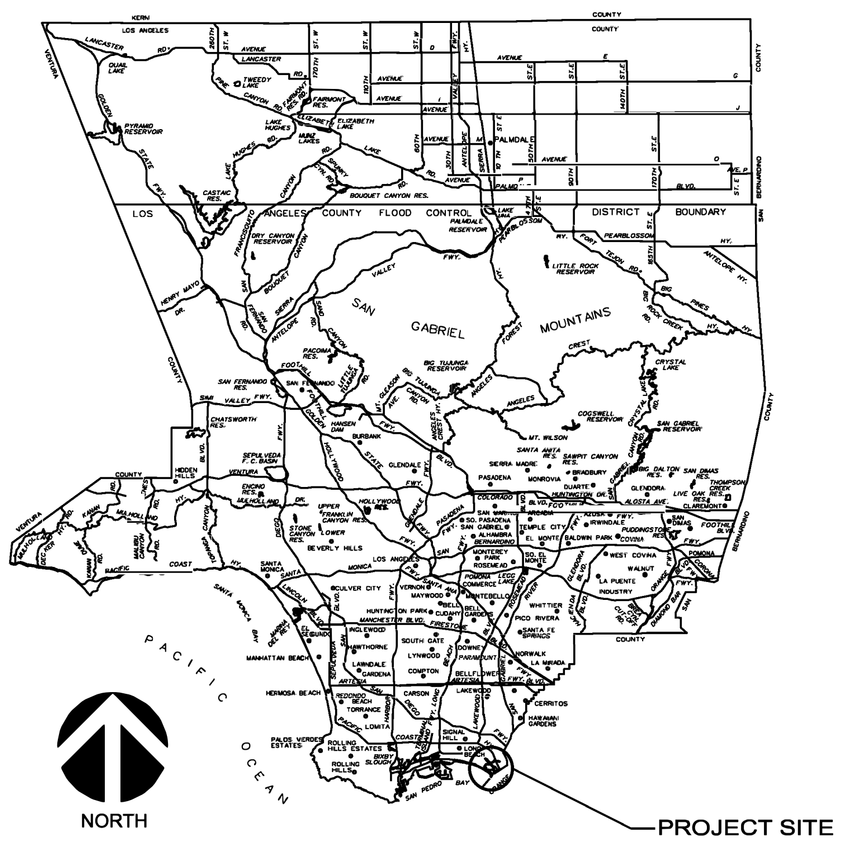

VICINITY MAP

ADDRESS:
5425 E OCEAN BLVD
LONG BEACH, CA 90815

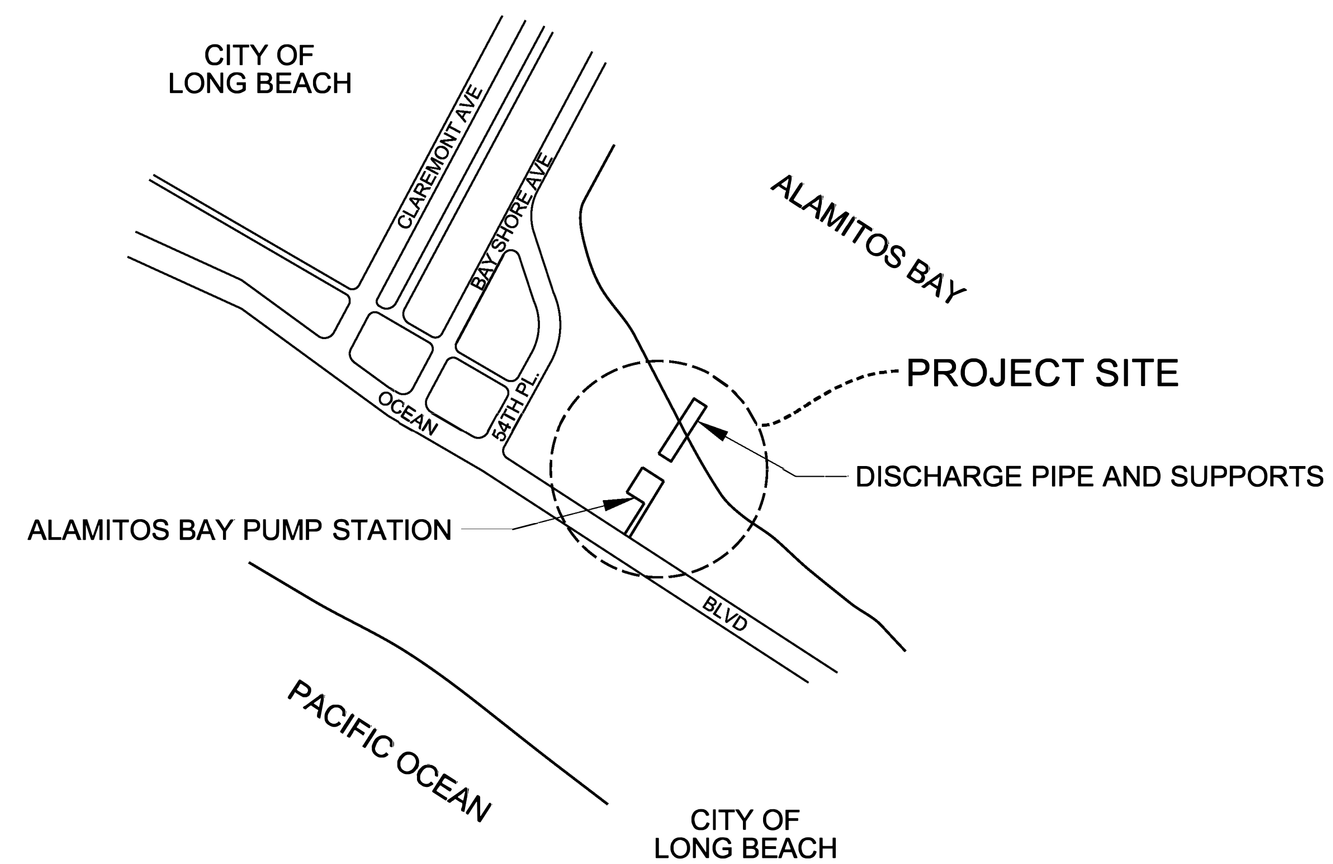

KEY MAP
Not to Scale

INDEX TO PROJECT PLANS

SHEET NO.	DESCRIPTION
PLAN S	
1.	TITLE SHEET
2.	GENERAL AND STRUCTURAL NOTES
3.	TEMPORARY STAGING PLAN I
4.	TEMPORARY STAGING PLAN II
5.	REMOVAL PLAN AND DETAILS
6.	PUMP STATION - FLOOR PLAN AND ELEVATIONS
7.	PUMP STATION - DETAILS
8.	PUMP STATION - ROOF FRAMING PLAN
9.	PUMP STATION - TYPICAL WALL ELEVATION
10.	PUMP STATION - TYPICAL WALL DETAILS
11.	PUMP STATION - TYPICAL ROOF AND WALL FRAMING DETAILS
12.	TEMPORARY COFFERDAM PLAN
13.	DISCHARGE LINE - GENERAL PLAN, ELEVATION AND SECTION
14.	DISCHARGE LINE - STEEL PIPE MANIFOLD DETAILS
15	DISCHARGE LINE - OUTLET STRUCTURE DETAILS I
16	DISCHARGE LINE - OUTLET STRUCTURE DETAILS II
17	DISCHARGE LINE - OUTLET STRUCTURE FOUNDATION
18	KNIFE GATE VALVE INSTALLATION DETAILS
19	WARNING SIGN LIGHT DETAIL 1
20	WARNING SIGN LIGHT DETAIL 2
21	WARNING SIGN LIGHT DETAIL 2
PLAN A	
1.	ELEVATIONS AND STREET VIEW
PLAN E	
1.	ABBREVIATIONS AND SYMBOLS
2.	DEMOLITION PLAN
3.	LIGHTING PLAN
4.	ELECTRICAL DETAILS
5.	MOTOR ROOM FLOOR PLAN
6.	SOUTH WALL AND WEST WALL ELEVATION PLAN
7.	NORTH WALL ELEVATION PLAN
8.	EXTERIOR WALL ELEVATION PLAN
9.	SITE PLAN AND EXISTING SINGLE LINE DIAGRAM
PLAN TC	PEDESTRIAN DETOUR ROUTE

PRIME CONTRACTOR LICENSE REQURIED: CLASS A

DRAFTER D. TRAN | DESIGNER H. EMAMI | CHECKER S. GREGOWSKE | CADD PROJECT FILE NAME FCC0001218-STRUCTURES.dgn

CITY OF LONG BEACH
BY _____ CITY ENGINEER DATE

811 Know what's below. Call before you dig.

APPROVED MARK PESTRELLA DIRECTOR OF PUBLIC WORKS
BY _____ DEPUTY DIRECTOR DATE

RECOMMENDED
BY _____ ASSISTANT DEPUTY DIRECTOR, DESIGN DATE

SUBMITTED
BY _____ STRUCTURES SECTION I DATE

DATE	MK	DESCRIPTION

REVISIONS

REGISTERED PROFESSIONAL ENGINEER John Yee Lu NO. C77676 CIVIL STATE OF CALIFORNIA
PROJECT ENGINEER DATE

COUNTY OF LOS ANGELES DEPARTMENT OF PUBLIC WORKS

PROJECT NO. 450 - ALAMITOS BAY PUMP STATION, DISCHARGE LINE REPLACEMENT PROJECT

TITLE SHEET

PROJECT ID: FCC0001218

FCC0001218 | PCA EF11911127 | DWG 275-450-DXX.1 | SHEET 1 OF 31

TS-DS.11/08

PLAN S-1

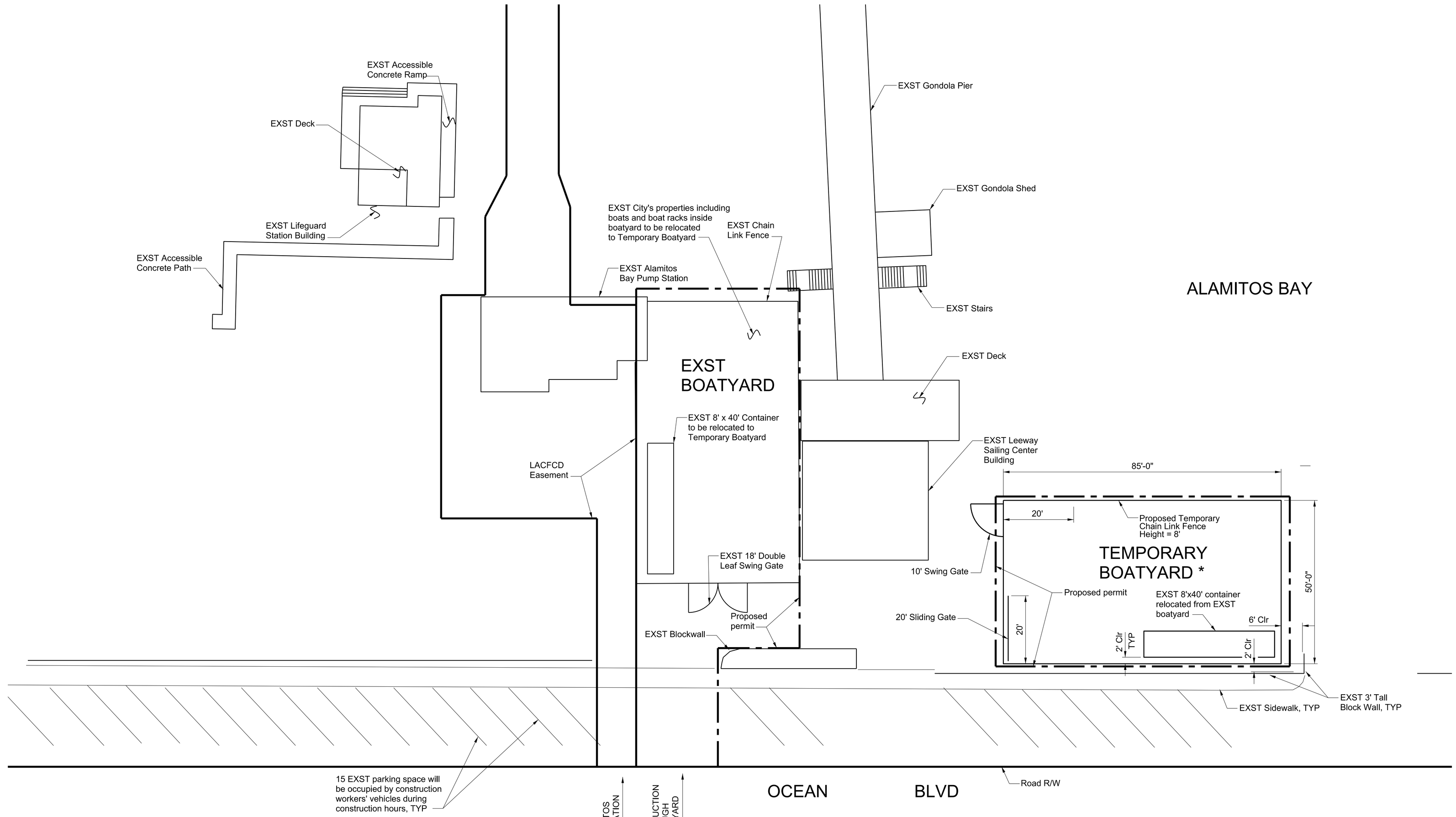

TEMPORARY BOATYARD PLAN

SCALE: 1" = 15'

Note:

1. Temporary boatyard shall be installed, and all City's properties including 80' long container, boats and boat racks inside EXST boatyard shall be relocated to temporary boatyard before proceeding to construction activities on pump station or discharge line.
2. Temporary chain link fence shall be covered with protective wrap with aesthetic design as specified in the Special Provisions.
3. All content inside temporary boatyard shall be relocated to their original location inside EXST boatyard after construction is completed. All components of temporary boatyard shall be removed and the location restored to existing condition after construction is completed.
4. Working drawing of the proposed temporary boatyard shall be submitted for review and approval.
5. Materials of temporary chain link fence shall comply with SSPWC and Special Provisions.

* Perimeter of temporary boatyard shall be protected with 2 high sandbag barrier (8" tall minimum) by tightly abutting sandbag to eliminate gaps and voids.

DATE	MK	DESCRIPTION

REVISIONS

REGISTERED PROFESSIONAL ENGINEER — John Yee Lu — NO. C77676 — CIVIL — STATE OF CALIFORNIA

PROJECT ENGINEER DATE

COUNTY OF LOS ANGELES DEPARTMENT OF PUBLIC WORKS

PROJECT NO. 450 - ALAMITOS BAY PUMP STATION, DISCHARGE LINE REPLACEMENT PROJECT

TEMPORARY STAGING PLAN I

PROJECT ID: FCC0001218

FCC0001218	PCA EF11911127	DWG 275-450-DXX.3	SHEET 3 OF 28

PS-DB 07/05

PLAN S-3

DRAFTER D. TRAN | DESIGNER H. EMAMI | CHECKER S. GREGOWSKE | CADD PROJECT FILE NAME FCC0001218-STRUCTURES.dgn | REVIEWED BY | DATE

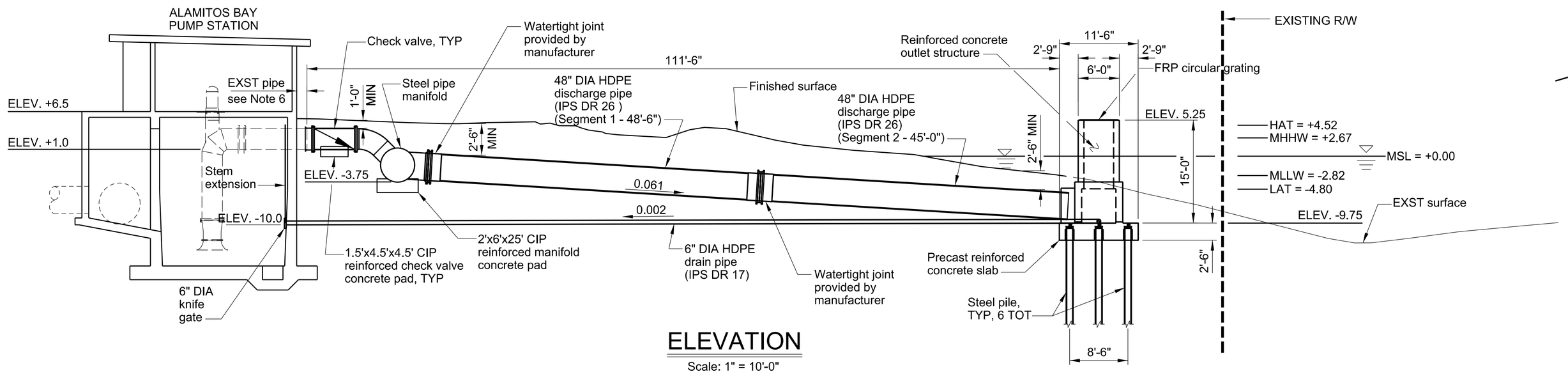

ELEVATION

Scale: 1" = 10'-0"

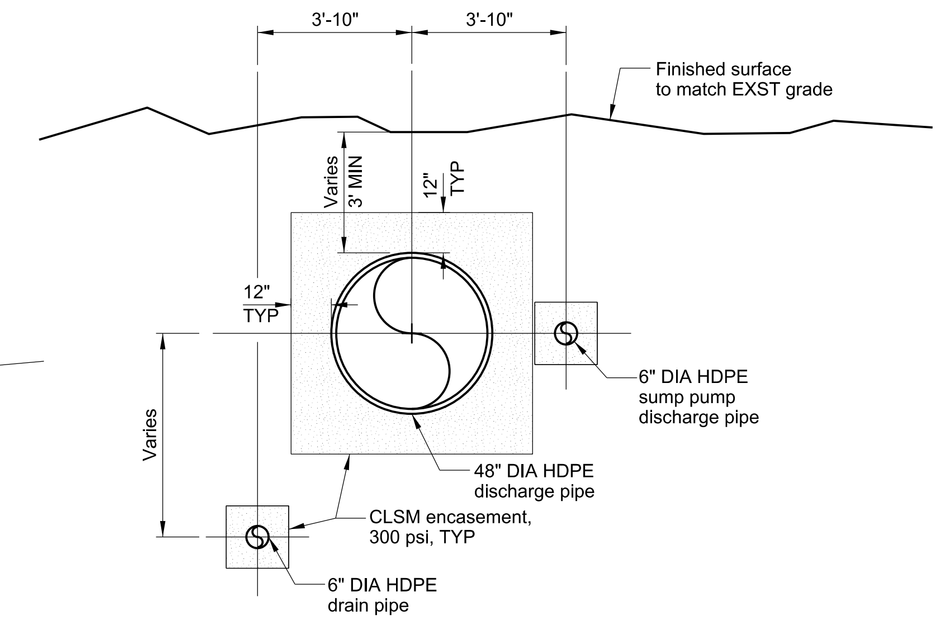

TYPICAL SECTION AT MIDSPAN

Scale: ¾" = 1'-0"

Note: 1. Steel pipe manifold detail see "SHEET S-14"
2. Reinforced concrete pad see "SHEET S-14"
3. Reinforced concrete outlet structure see "SHEET S-15"
4. Precast reinforced concrete slab see "SHEET S-17"
5. Steel pile see "SHEET S-17"
6. Knife gate see "SHEET S-18"
7. Retain the following length of existing steel pipe stub out outside of pump station wall:
1) EXST 36" DIA steel pipe: 1'-6"
2) EXST 30" DIA steel pipe: 3'-1½", TOT 2
3) EXST 6" DIA steel pipe: 1'-6"

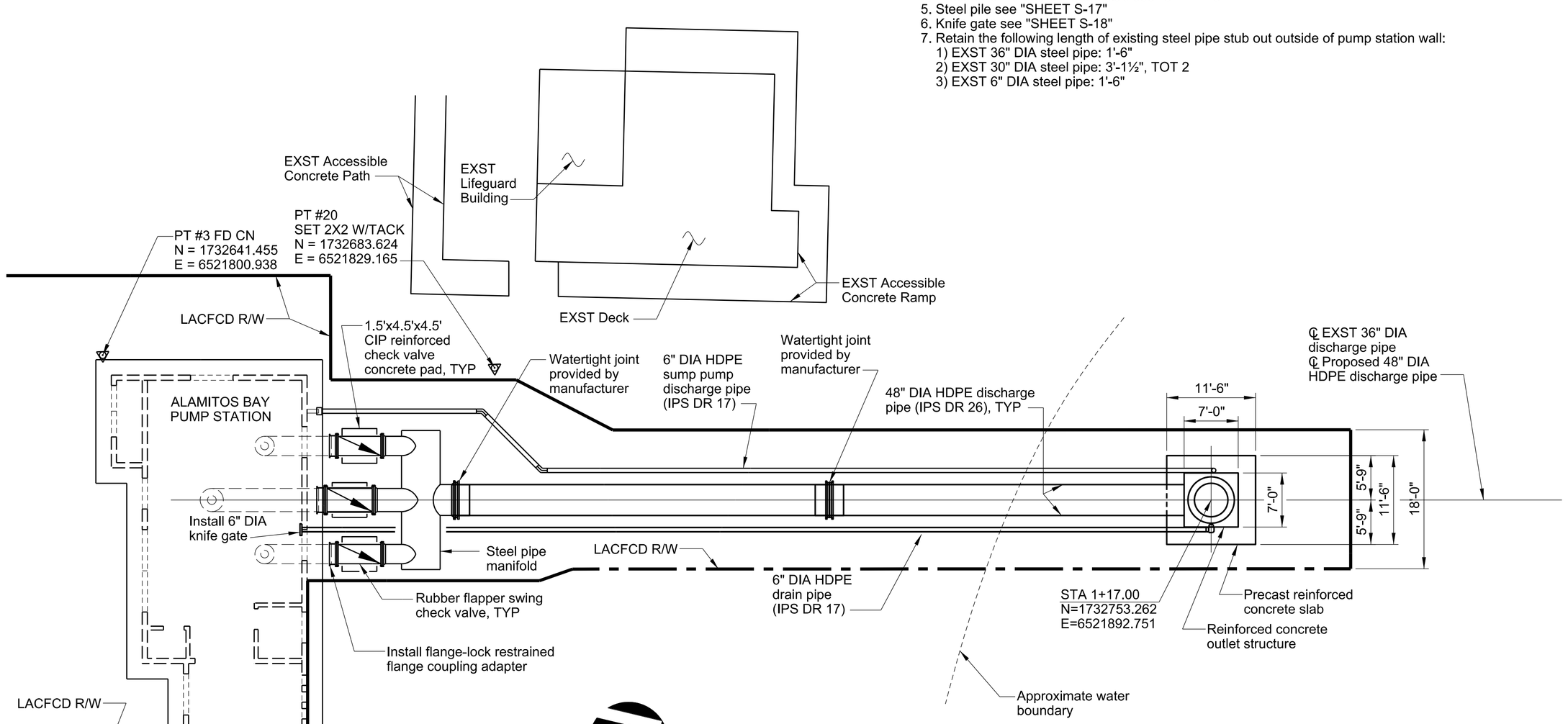

GENERAL PLAN

Scale: 1" = 10'-0"

NORTH

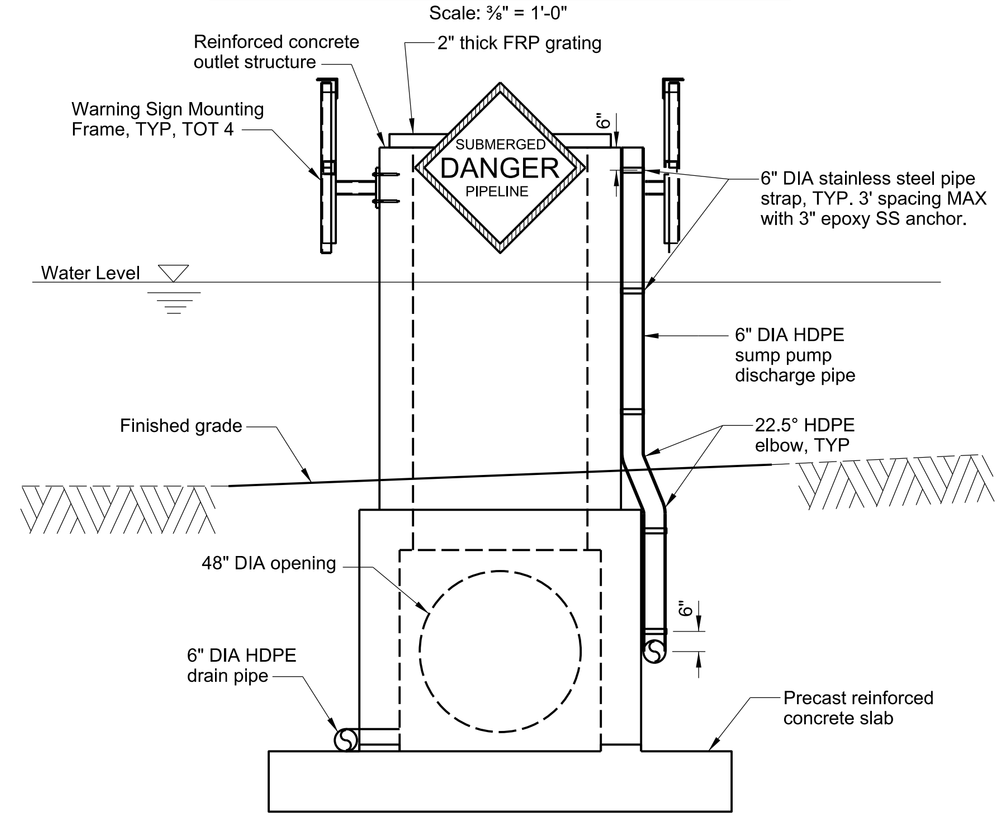

TYPICAL SECTION AT OUTLET STRUCTURE

Scale: ⅜" = 1'-0"

DATE	MK	DESCRIPTION

REVISIONS

REGISTERED PROFESSIONAL ENGINEER
John Yee Lu
NO. C77676
CIVIL
STATE OF CALIFORNIA

PROJECT ENGINEER DATE

COUNTY OF LOS ANGELES DEPARTMENT OF PUBLIC WORKS

PROJECT NO. 450 - ALAMITOS BAY PUMP STATION, DISCHARGE LINE REPLACEMENT PROJECT

DISCHARGE LINE - GENERAL PLAN, ELEVATION AND SECTION

PROJECT ID: FCC0001218

FCC0001218	PCA EF11911127	DWG 275-450-DXX.13	SHEET 13 OF 28

PS-DS 07/05

PLAN S-13

DRAFTER D. TRAN | DESIGNER H. EMAMI | CHECKER S. GREGOWSKE | CADD PROJECT FILE NAME FCC0001218-STRUCTURES.dgn | REVIEWED BY | DATE

California Coastal Commission
CDP 5-18-1259
Exhibit 3 p. 3 of 5

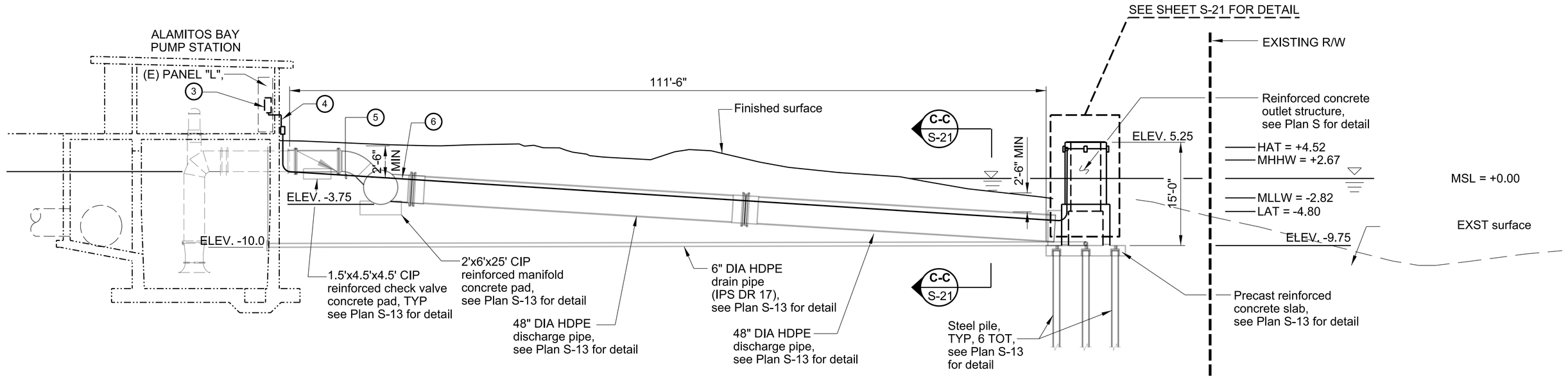

SECTION A-A

Scale: 1" = 10'-0"

APPLICABLE NOTES

ALL CONSTRUCTION SHALL COMPLY WITH LATEST APPROVED CODES LISTED BELOW AND ALL APPLICABLE CODES, STATUES, REGULATIONS, ORDINANCES, ETC., CURRENTLY IN FORCE AND THROUGHTOUT THE DURATION OF THE PROJECT, INCLUDING, BUT NOT LIMITED TO THE FOLLOWING,

2017 LOS ANGELES COUNTY ELECTRICAL CODE
2016 CALIFORNIA ELECTRICAL CODE (CEC)
2014 NATIONAL ELECTRICAL CODE (NEC)
2018 STANDARD SPECIFICATION FOR PUBLIC WORKS CONSTRUCTION (SSPWC)
2012 STANDARD PLANS FOR PUBLIC WORKS CONSTRUCTION (SPPWC)

ALL ELECTRICAL EQUIPMENT SHALL BE LABELED, LISTED, OR CERTIFIED BY A NATIONALLY RECOGNIZED TESTING LABORATORY ACCREDITED BY THE UNITED STATES OCCUPATIONAL SAFETY HEALTH ADMINISTRATION.

GENERAL NOTES

A. WORK UNDER THIS CONTRACT SHALL INCLUDE, BUT NOT TO BE LIMITED TO, FURNISHING, INSTALLING AND CONNECTION OF ALL ELECTRICAL EQUIPMENT AND TESTING OF ALL SYSTEMS AND SUB-SYSTEMS WITHIN THE SCOPE OF WORK. BEFORE ACCEPTANCE OF THE WORK, THE CONTRACTOR SHALL DEMONSTRATE, IN THE PRESENCE OF THE COUNTY ENGINEER, THAT ALL PORTIONS OF THE ELECTRICAL WORK ARE OPERATING PROPERLY PER MANUFACTURER'S SPECIFICATION.

B. VERIFY LOCATIONS OF HOMERUNS AND ADJUST CIRCUIT NUMBERS ACCORDING TO EXISTING CONDITIONS IF REQUIRED.

C. IF THERE ARE ANY DEVIATIONS FROM THE CIRCUITRY SHOWN, PROVIDE AS-BUILT DRAWINGS INDICATED THE CHANGES.

D. ALL CONDUCTORS SHALL BE COPPER, SINGLE CONDUCTOR 98% CONDUCTIVITY, ANNEALED, 600-VOLT RATED, TYPE THHN OR THWN-2 RATED 90°C INSULATION. ALUMINUM CONDUCTORS ARE NOT PERMITTED.

E. RACEWAY TYPES: EXPOSED INDOOR CONDUITS SHALL BE ELECTRICAL METALLIC TUBING (EMT) AND FLEXIBLE STEEL CONDUIT; EXPOSED OUTDOOR CONDUITS SHALL BE RIGID GALVANIZED STEEL (RGS), LIQUID-TIGHT FLEXIBLE METAL CONDUIT, AND UNDERGROUND CONDUITS SHALL BE PVC SCHEDULE 80 (STRAIGHT RUNS) AND SCHEDULE 80 (SWEEPS), MINIMUM SIZE 3/4" DIAMETER. ALL CONDUIT RUNS SHALL HAVE A GREEN INSULATED EQUIPMENT GROUNDING CONDUCTOR SIZED PER THE NEC.

F. GENERAL NOTES PERTAIN TO ELECTRICAL WORK ONLY. REFER TO MECHANICAL PLANS FOR NON-ELECTRICAL SCOPE OF WORK AND REQUIREMENTS.

CONSTURCTION NOTES

1. FURNISH AND INSTALL A 15A/1P CIRCUIT BREAKER IN EXISTING PANEL "L".
2. FURNISH AND INSTALL 1"C - 2#10 & 1#10 GND.
3. FURNISH AND INSTALL WARNING SIGN LIGHTING CONTROL PANEL. SEE PLAN S-X FOR DETAIL.
4. FURNISH AND INSTALL J-BOX.
5. FURNISH AND INSTALL UNDERGROUND 2"C - 2#10 & 1#10 GND.
6. 2"C EMBEDDED IN CLSM ENCASEMENT AND OUTLET STRUCTURE. FURNISH AND INSTALL 2#10 & 1#10 GND IN THE 2" EMBEDDED CONDUIT.

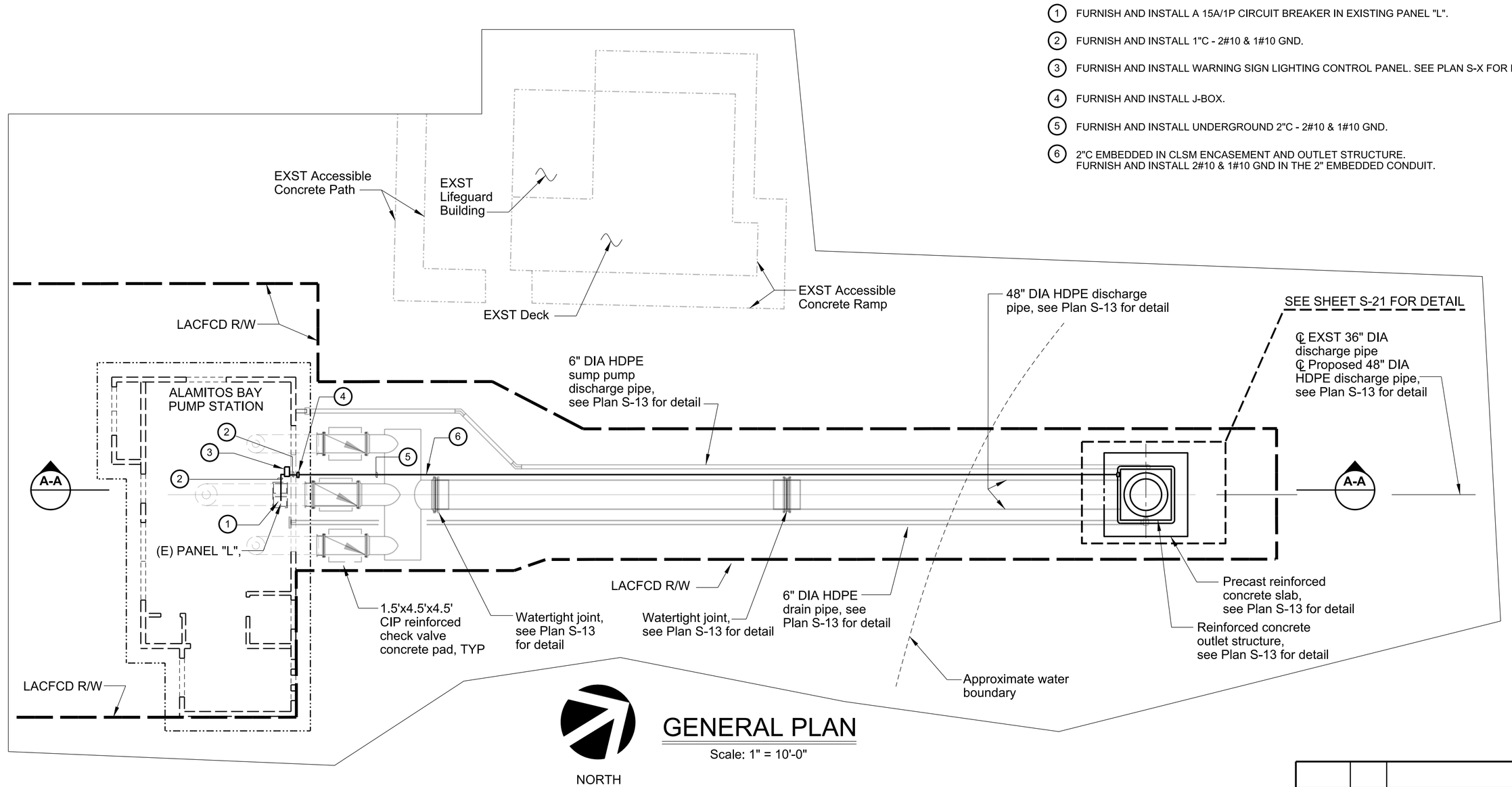

GENERAL PLAN

Scale: 1" = 10'-0"

DATE	MK	DESCRIPTION

REVISIONS

REGISTERED PROFESSIONAL ENGINEER
ALBERTO DE LA MERCED
NO. E15357
ELECTRICAL
STATE OF CALIFORNIA

PROJECT ENGINEER DATE

COUNTY OF LOS ANGELES DEPARTMENT OF PUBLIC WORKS

PROJECT NO. 450 - ALAMITOS BAY PUMP STATION, DISCHARGE LINE REPLACEMENT PROJECT

WARNING SIGN LIGHT DETAIL - 1

PROJECT ID: FCC0001218

FCC0001218	PCA EF11911127	DWG 275-450-DXX.XX	SHEET 19 OF 31

DRAFTER | DESIGNER | CHECKER A. DE LA MERCED | CADD PROJECT FILE NAME FCC0001218-WARNINGSIGN.dgn | REVIEWED BY | DATE

California Coastal Commission
CDP 5-18-1259
Exhibit 3 p. 4 of 5

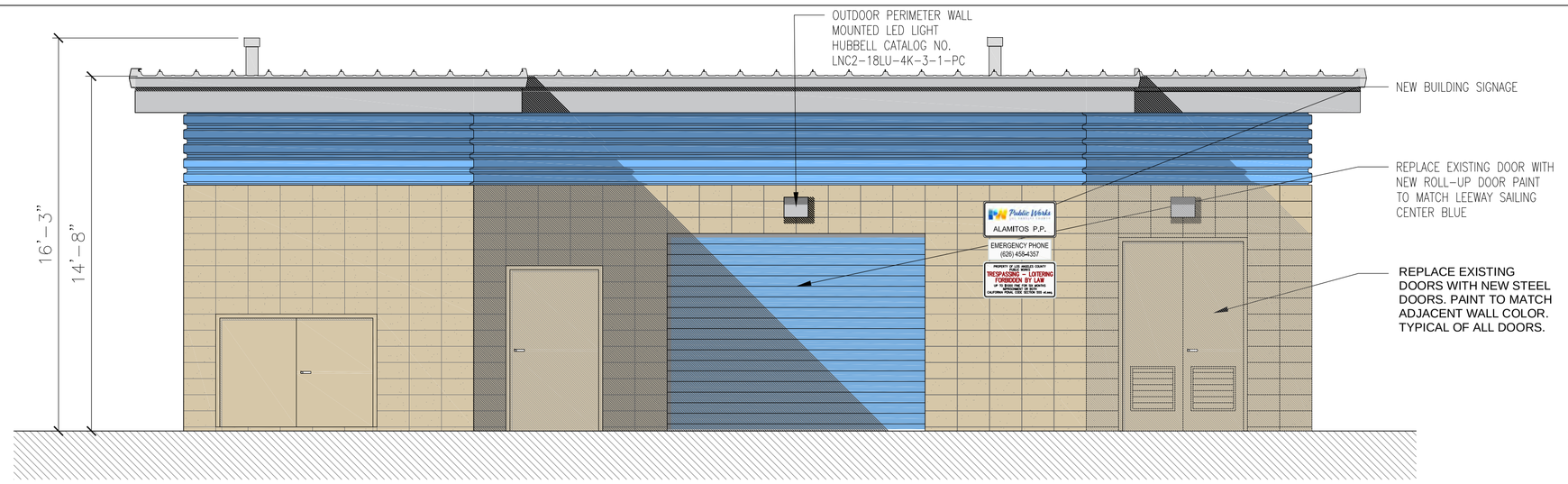

SOUTH ELEVATION

SCALE: 1/4"=1'-0"

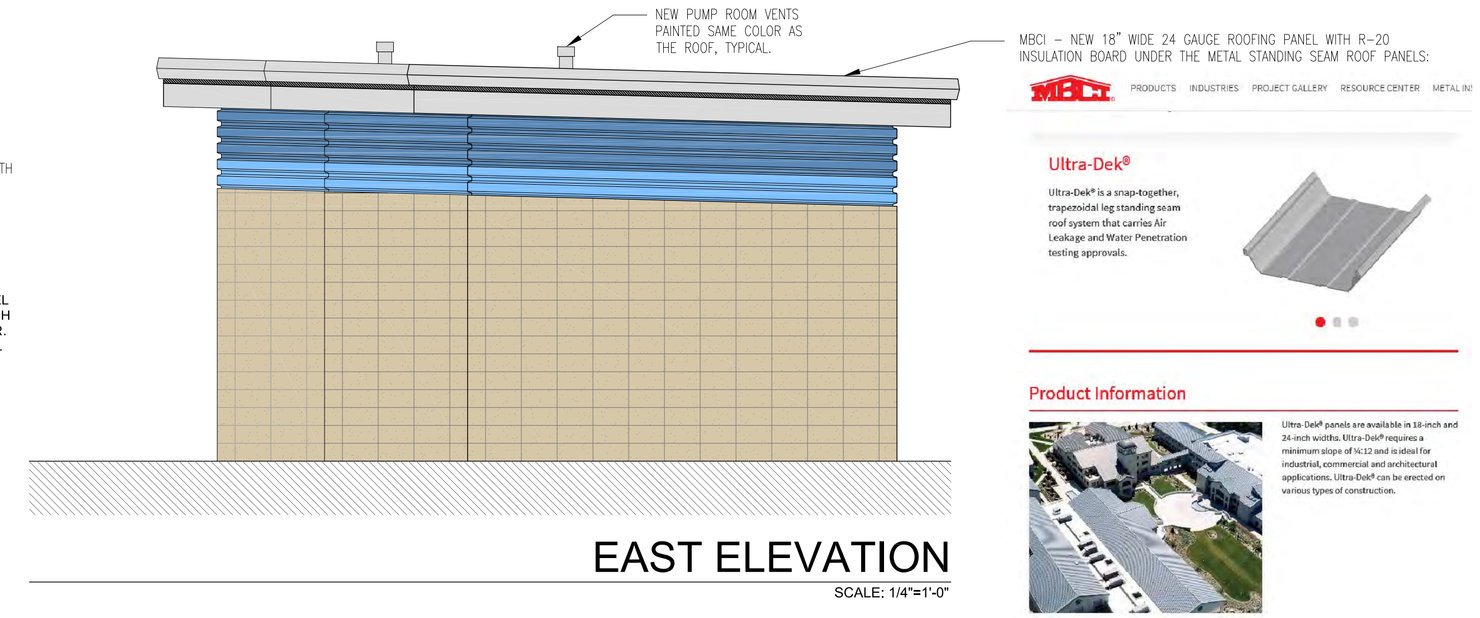

MBCI WALL PANEL PAINTED BLUE TO MATCH LEEWAY SAILING CENTER.

EAST ELEVATION

SCALE: 1/4"=1'-0"

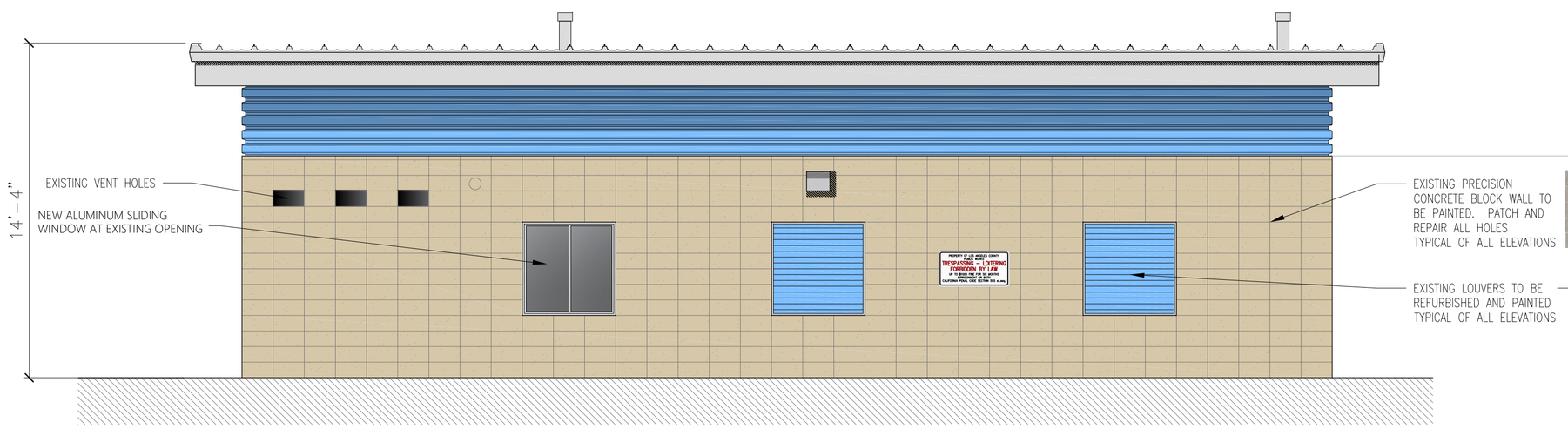

NORTH ELEVATION

SCALE: 1/4"=1'-0"

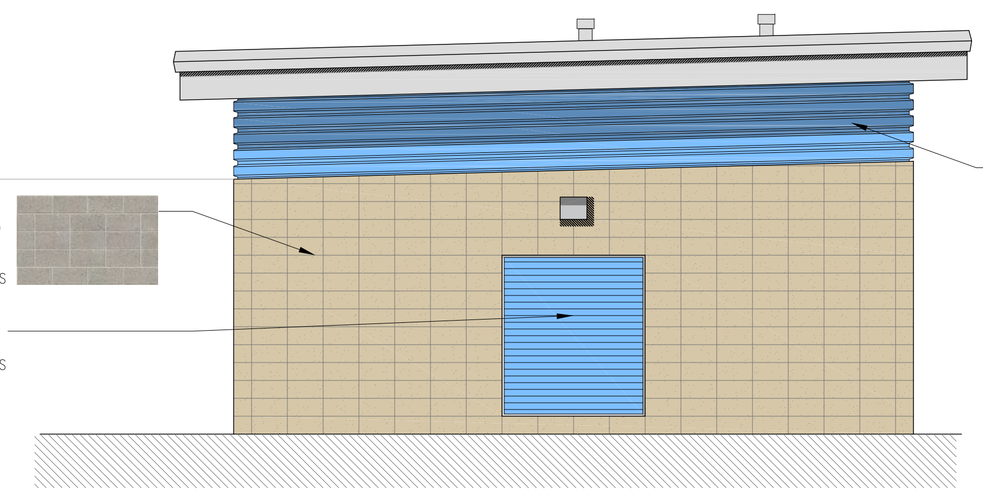

WEST ELEVATION

SCALE: 1/4"=1'-0"

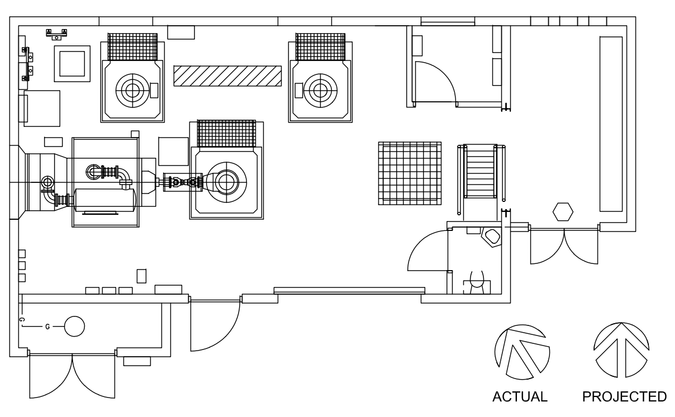

PLAN VIEW

SCALE: 1/8"=1'-0"

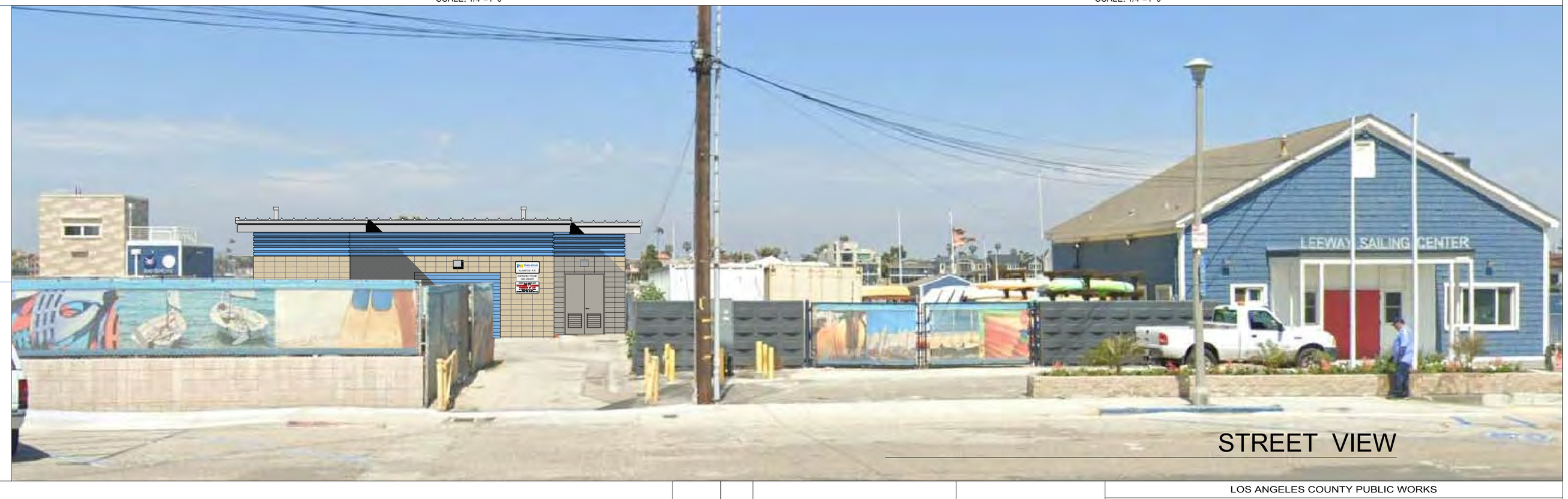

STREET VIEW

DATE	MK	DESCRIPTION

REVISIONS

LICENSED ARCHITECT JANE BECKONS C-28753 Exp. Date JAN-2021 STATE OF CALIFORNIA

PROJECT ENGINEER DATE

LOS ANGELES COUNTY PUBLIC WORKS

PROJECT NO. 450 - ALAMITOS BAY PUMP STATION, DISCHARGE LINE REPLACEMENT PROJECT

ELEVATIONS & STREET VIEW

PROJECT ID: FCC0001218

FCC0001218	PCA EF11911127	DWG 275-450-DXX. 2	SHEET 22 OF 31

08/22/19

PLAN A-1

DATE
REVIEWED BY
CADD PROJECT FILE NAME Elevation & floor plan.dwg
CHECKER -
DESIGNER JCB
DRAFTER D. TRAN

California Coastal Commission
CDP 5-98-329-I
Exhibit 3 p. 5 of 5

CALIFORNIA COASTAL COMMISSION
SOUTH COAST DISTRICT OFFICE
200 OCEANGATE, 10TH FLOOR
LONG BEACH, CALIFORNIA 90802-4416
PH (562) 590-5071 FAX (562) 590-5084
WWW.COASTAL.CA.GOV

COASTAL DEVELOPMENT PERMIT
EMERGENCY PERMIT

Issue Date: December 17, 2019
Emergency Permit No. G-5-19-0045

APPLICANT:

Los Angeles County Flood Control District
900 South Fremont Ave.
Alhambra, CA 91803

LOCATION OF EMERGENCY WORK:

WITHIN THE SHORELINE AND OPEN WATER ALONG THE SOUTH SIDE OF ALAMITOS BAY, 5437 OCEAN BLVD., LONG BEACH (LOS ANGELES COUNTY)

WORK PROPOSED:

Partial removal of the pump station associated with the stormwater discharge line structure in Alamitos Bay, including the demolition and removal of Piers 5 through 8, the lifeguard station, timber deck and railing, and removal of all discharge lines north of Pier 4. Pier pilings will be cut flush to grade. Construction equipment will include a loader and/or excavator operated from the shoreline, which will be driven approximately 3 feet into the water to complete the demolition. The existing low flow diversion pump located within the pump station would remain operational during construction. Construction staging will occur on the Los Angeles County Flood Control District (LAFCD) right-of-way within an existing kayak storage area located between the pump station and the Leeway Sailing and Aquatics Center. Kayaks will be relocated to a temporary storage area surrounded by fencing with two gates which will be utilized as the ingress/egress access point to the site. A debris containment boom and silt curtain will be installed in a horseshoe shape around the discharge line, and secured with a metal rod driven into the sand on the shoreline.

PERMIT RATIONALE:

This letter constitutes approval of the emergency work you or your representative has requested to be done at the location listed above. I understand from the information submitted that while going through the standard environmental process for the replacement of the dilapidated pump station which is planned to begin in 2021, conditions of the discharge pier have worsened to the point where it is considered a high-risk public safety hazard in an area which is heavily utilized by the public for recreational purposes.[1] Failure of the piers will result in the collapse of the discharge lines as well as the collapse of the obsolete lifeguard station located above the discharge lines.

The site was surveyed on October 29, 2019 by a qualified marine biologist for Pacific seahorses (*Hippocampus ingens*), eelgrass (*Zostera marina*), and invasive algae (*Cauerpa taxifolia*) within and around the vicinity of the site. No Pacific seahorses were located during the focused and intensive survey of habitat surrounding the pump station discharge unit, and no caulerpa was found. The total amount of vegetated eelgrass in the project area that may be indirectly impacted due to increased turbidity related to the project totaled 0.19 acre (8,221 sq. ft.).

California Coastal Commission
CDP 5-18-1259
Exhibit 4 p. 1 of 4

[1] Coastal Development Permit Application No. 5-18-1259 is still incomplete pending a local CDP from the City of Long Beach.

EMERGENCY PERMIT

As stated, repairs to the pump station require immediate action to potentially prevent or mitigate loss or damage to life, health, property or essential public services. 14 Cal. Admin. Code Section 13009. The Executive Director of the Coastal Commission hereby finds that:

(a) An emergency exists which requires action more quickly than permitted by the procedures for administrative or ordinary permits and the development can and will be completed within 30 days unless otherwise specified by the terms of this permit;
(b) Public comment on the proposed emergency action has been reviewed if time allows;
(c) As conditioned, the work proposed would be consistent with the requirements of the California Coastal Act of 1976.

The work is hereby approved, subject to conditions listed on the attached page.

Sincerely,

John Ainsworth
Executive Director

By: Steve Hudson
District Director

cc: City of Long Beach Department of Development Services
Enclosures: 1) Acceptance Form; 2) Regular Permit Application Form

CONDITIONS OF APPROVAL:

1. The enclosed Emergency Permit Acceptance form must be signed by the Los Angeles Flood Control District and returned to our office within 15 days.

2. Only that work specifically described in this permit and for the specific property listed above is authorized. Any additional work requires separate authorization from the Executive Director.

3. The work authorized by this permit must be completed within 60 days of the date of this permit (i.e., by March 17, 2020), unless additional time is granted for good cause by the Executive Director.

4. Any additional work requires separate authorization from the Executive Director. In exercising this permit, the applicant agrees to hold the California Coastal Commission harmless from any liabilities for damage to public or private properties or personal injury that may result from the project.

5. This permit does not obviate the need to obtain necessary authorizations and /or permits from the other agencies (i.e. CA Dept. of Fish & Wildlife, U.S. Fish & Wildlife, U.S. Army Corps of Engineers, State Land Commission.)

6. Per the Marine Resources Assessment 2019, during construction the following BMPs will be

EMERGENCY PERMIT

followed to minimize on-site damages to existing eelgrass bed resources:

a. Prior to the start of any construction work, the project marine biologist will mark the positions of eelgrass beds in the vicinity of the pump station discharge structure with buoys.
b. Excavator operations will minimize the impacts to eelgrass vegetation and maintain a 6-foot buffer around any eelgrass, as practical.
c. The containment boom and silt curtain shall be maintained in good working condition to ensure that eelgrass vegetation outside the proposed work zone is minimally affected by construction operations.
d. Anchoring systems for the containment boom and silt curtain shall not be placed over any eelgrass vegetation.

7. In addition to the above Best Management Practices, the project will implement the following:
   a. Before the debris containment boom and silt curtains are installed, a marine biologist will survey the area for sensitive species (such as green sea turtles, marine mammals, and seahorses). If green sea turtles or marine mammals are present onsite, the project will suspend construction activities until they leave the site on their own.
   b. If seahorses are present onsite, they will be collected by a qualified marine biologist that will collect them by hand, place in an aerated 5-gallon bucket, and move the seahorses out of the project area. Locations of the seahorse placement will be marked with a GPS.
   c. Any additional macrofauna that may be impacted during the demolition would be relocated as recommended by the qualified marine biologist.

8. Post-Construction Eelgrass Survey. Given that eelgrass has been identified within the project site and the 10m buffer area, within 30 days of completion of construction, or within the first 30 days of the next active growth period following completion of construction that occurs outside of the active growth period, the applicant shall survey the project site and the 10m buffer area to determine if any eelgrass was adversely impacted. The survey shall be prepared in full compliance with the CEMP adopted by the NMFS (except as modified by this special condition), and in consultation with the CDFW. If side-scan sonar methods are to be used, evidence of a valid permit from CSLC must also be provided prior to the commencement of each survey period. The applicant shall submit the post-construction eelgrass survey for the review and approval of the Executive Director within thirty (30) days after completion of the survey. If any eelgrass has been adversely impacted, the applicant shall replace the impacted eelgrass at a minimum final 1.38:1 (mitigation:impact) ratio on-site, or at another location, in accordance with the CEMP. Any exceptions to the required 1.38:1 minimum final mitigation ratio found within the CEMP shall not apply. Based on past performance of eelgrass mitigation efforts, in order to achieve this minimum, the appropriate regional initial planting ratio provided in the CEMP should be used. Implementation of mitigation to ensure success in achieving the minimum final mitigation ratio (1.38:1) shall require an amendment to this permit or a new coastal development permit unless the Executive Director provides a written determination that no amendment or new permit is required.

If you have any questions about the provisioning of this emergency permit, please call the Commission at the address and telephone number listed on the first page.

CALIFORNIA COASTAL COMMISSION
South Coast Area Office
301 E. Ocean Blvd., Suite 300
Long Beach, CA 90802-4302
(562) 590-5071

EMERGENCY PERMIT ACCEPTANCE FORM

TO: CALIFORNIA COASTAL COMMISISON
South Coast Area Office
301 E. Ocean Blvd., Suite 300
Long Beach, CA 90802-4416

RE: Emergency Permit No. G-5-19-0045

INSTRUCTIONS:

After reading the attached Emergency Permit, please sign this form and return to the South Coast District Office within 15 working days from the permit's date.

I hereby understand all of the conditions of the emergency permit being issued to me and agree to abide by them.

I also understand that the emergency work is TEMPORARY and that a regular Coastal Permit is necessary to make it permanent. A regular coastal development permit will be obtained for the work undertaken pursuant to this permit as part of an ongoing plan, CDP application, resolution to the violation or otherwise. A regular permit will be subject to all of the provisions of the California Coastal Act and may be conditioned accordingly.

Signature of Property Owner or
Authorized Representative

Nandini Moran
Name

900 S. Fremont Ave
Address

Alhambra, CA 91803

12/19/19
Date