CALIFORNIA COASTAL COMMISSION
South Coast Area Office
301 E. Ocean Blvd. Suite 300
Long Beach, CA 90802-4302
(562) 590-5071

F10d

5-21-0079 (VILORIA)

AUGUST 13, 2021

EXHIBITS

Exhibit 1 – Vicinity Map, Project Location

Exhibit 2 – Project Plans

Exhibit 3 – Site Plan with Canyon Edge

Exhibit 4 – Site Photo

Exhibit 5 – City of San Clemente Land Use Plan Figure 4-2-A

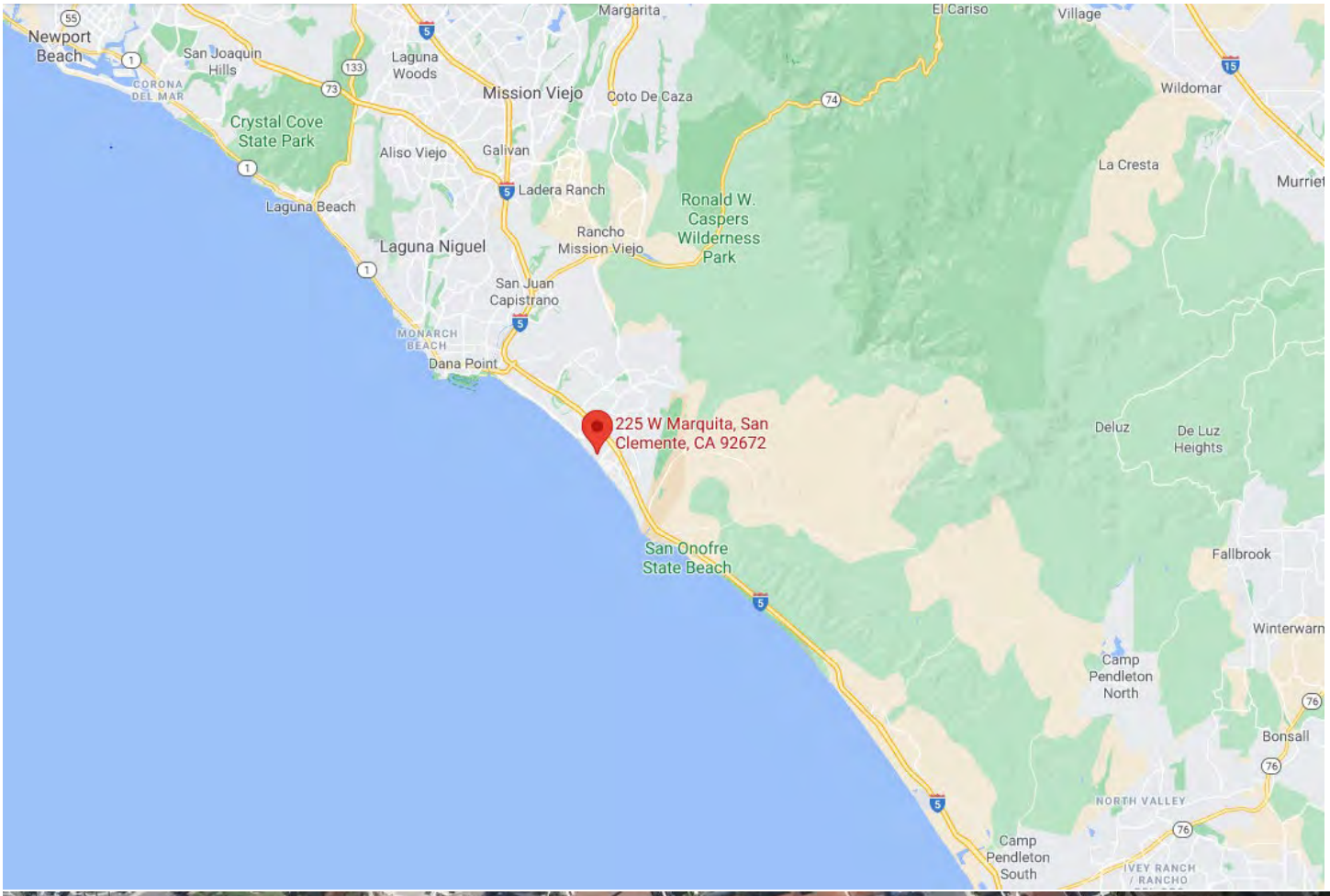

CDP o. 5-21-0079
Exhibit 1

ARTIAL SOUT! ELEVATION

1/4" = 1'-0"

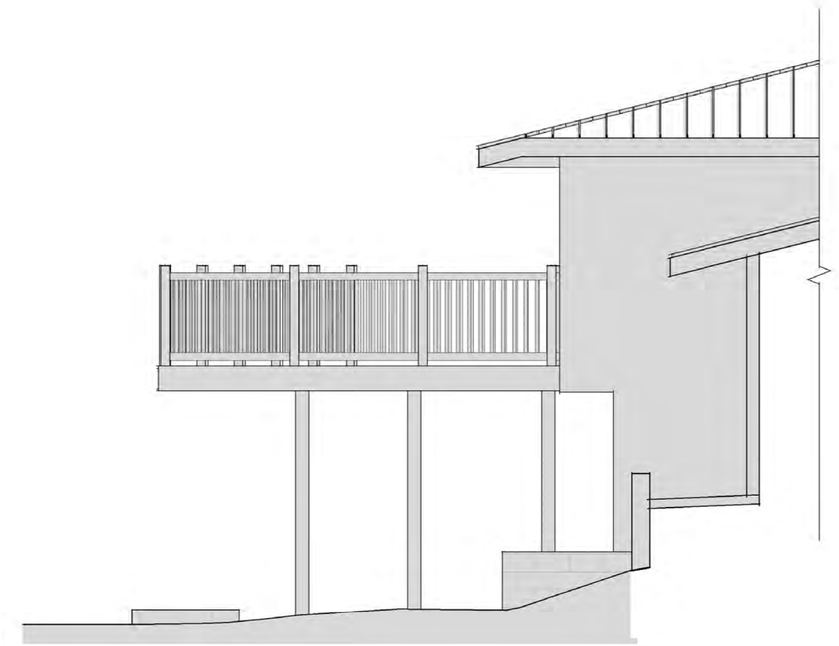

ARTIAL NORT! ELEVATION

1/4" = 1'-0"

EAST ELEVATION

1/4" = 1'-0"

California Coastal Commission
CDP 5-21-0079
Exhibit 2 p. 1 of 4

REVISION SCHEDULE

NO	DATE	DESCRIPTION

BES
BUCHAN ENGINEERING STRUCTURES INC.
142 AVENIDA SANTA MARGARITA, SAN CLEMENTE CA 92672
(949) 395 0619
IAN@BESSNCSC.COM

DRAWINGS, SPECIFICATIONS, IDEAS, DESIGNS, AND ARRANGEMENTS REPRESENTED THEREBY ARE AND SHALL REMAIN THE PROPERTY OF THE BES, INC. NO PART THEREOF SHALL BE COPIED, DISCLOSED TO THIRD PARTIES, OR DISTRIBUTED, SOLD, PUBLISHED OR USED WITHOUT PRIOR WRITTEN CONSENT OF AND APPROPRIATE COMPENSATION TO THE BES, INC. VISUAL CONTACT WITH THE ABOVE DRAWINGS OR SPECIFICATIONS SHALL CONSTITUTE CONCLUSIVE EVIDENCE OF ACCEPTANCE OF THESE RESTRICTIONS

VILORIA RESIDENCE

DEC℄ ADDITION

225 W MARQUITA
SAN CLEMENTE, CA 92672

Project No.

2020-01

Sheet Title:

E TERIOR ELEVATIONS

Sheet No.

A2

Issued Date: 9/7/20

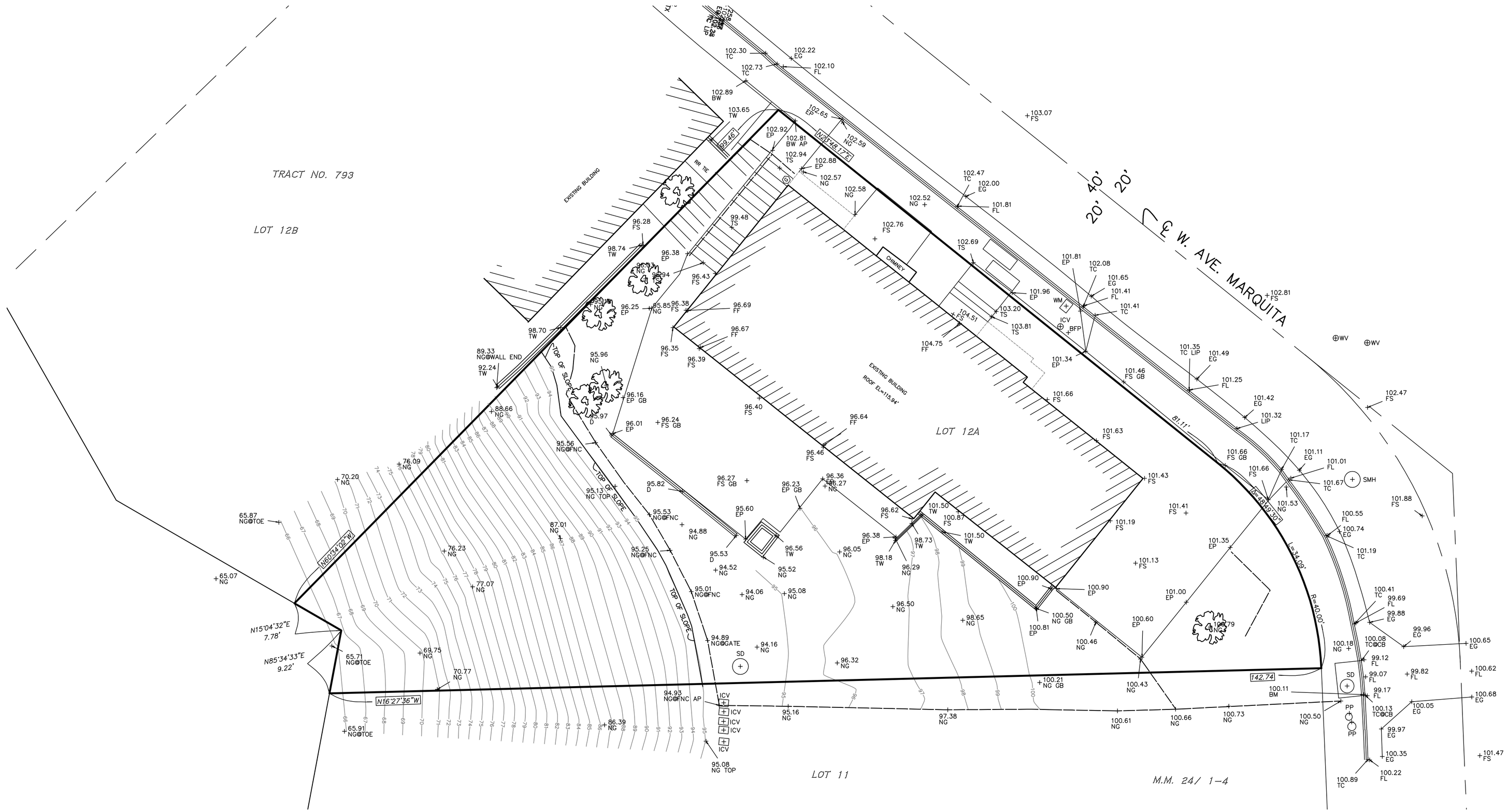

LEGEND

NG	NATURAL GROUND
FS	FINISHED SURFACE
TC	TOP OF CURB
FL	FLOW LINE
EG	EDGE OF GUTTER
EP	EDGE OF PAVEMENT
TW	TOP OF WALL
FNC	FENCE
CB	CATCH BASIN
WM	WATER METER
SMH	SEWER MAN HOLE
GB	GRADE BREAK
BM	BENCHMARK
FF	FINISH FLOOR
BW	BACK WALK
ICV	IRRIGATION CONTROL VALVE
TREE	
FENCE	
WALL	(WIDTHS VARY)

BASIS OF BEARINGS:

THE BEARINGS SHOWN HEREON ARE BASED ON THE CENTERLINE OF WEST AVE. MARQUITA BEING NORTH 55°52'47" EAST AS SHOWN ON TRACT NO. 17124 FILED WITH THE COUNTY RECORDER OF ORANGE COUNTY IN BOOK 905, PAGES 8 THROUGH 11, INCLUSIVE OF MISCELLANEOUS MAPS.

SURVEYORS NOTES:

THIS IS A TOPOGRAPHIC MAP AND NOT A BOUNDARY SURVEY! BOUNDARY INFORMATION SHOWN HEREON IS RECORD DATA AS SHOWN ON TRACT NO. 793 BOOK 24, PAGES 1 THROUGH 5, INCLUSIVE, OF MISCELLANEOUS MAPS IN THE OFFICE OF THE COUNTY RECORDER OF ORANGE COUNTY CALIFORNIA.

THIS SURVEY DOES NOT PURPORT TO DISCLOSE EASEMENTS EXCEPT THOSE SPECIFICALLY DELINEATED HEREON, IF ANY. IF UNDERGROUND UTILITIES, OTHER STRUCTURES OR ZONES, SETBACK AND STREET WIDENING DATA ARE SHOWN HEREON, IT IS FOR INFORMATION ONLY, HAVING BEEN OBTAINED FROM OTHERS SOURCES NOT CONNECTED WITH THIS COMPANY. NO REPRESENTATION IS MADE AS TO THE ACCURACY OR COMPLETENESS OF SAID INFORMATION AND ANY USER OF THIS MAP IS URGED TO CONTACT THE UTILITY OR GOVERNING AGENCY DIRECTLY.

LEGAL DESCRIPTION:

LOT 12A BLOCK 17 OF TRACT NO. 793, IN THE CITY OF SAN CLEMENTE, COUNTY OF ORANGE, STATE OF CALIFORNIA, AS PER MAP RECORDED IN BOOK 24, PAGES 1 THROUGH 4, INCLUSIVE, OF MISCELLANEOUS MAPS, EXCEPTING THERE FROM THAT PORTION OF LOT 12A DESCRIBED IN GRANT DEED RECORD 13212 PAGE 680 OF OFFICIAL RECORDS OF SAID COUNTY.

ASSESSORS PARCEL NO.:

APN#: 692-076-04

BENCHMARK:

FD. L&T STAMPED L.S. 6328 IN TOP OF CURB ON CATCH BASIN NEAR THE NORTHERLY CORNER OF LOT 12A, OF TRACT NO. 792 M.M. 24/1-4.
ELEV=100.11'

PROFESSIONAL LAND SURVEYOR
GREGORY S. BORCHARD
L.S. NO. 7705
EXP. 12-31-18
STATE OF CALIFORNIA

BORCHARD SURVEYING AND MAPPING, INC.
815 CALLE PUENTE
SAN CLEMENTE CA. 92672
(949) 439-4682

TOPOGRAPHIC SURVEY OF:
225 W. AVE. MARQUITA
SAN CLEMENTE, CA 92672

DATE OF SURVEY: 10/02/17

SHEET 1 OF 1

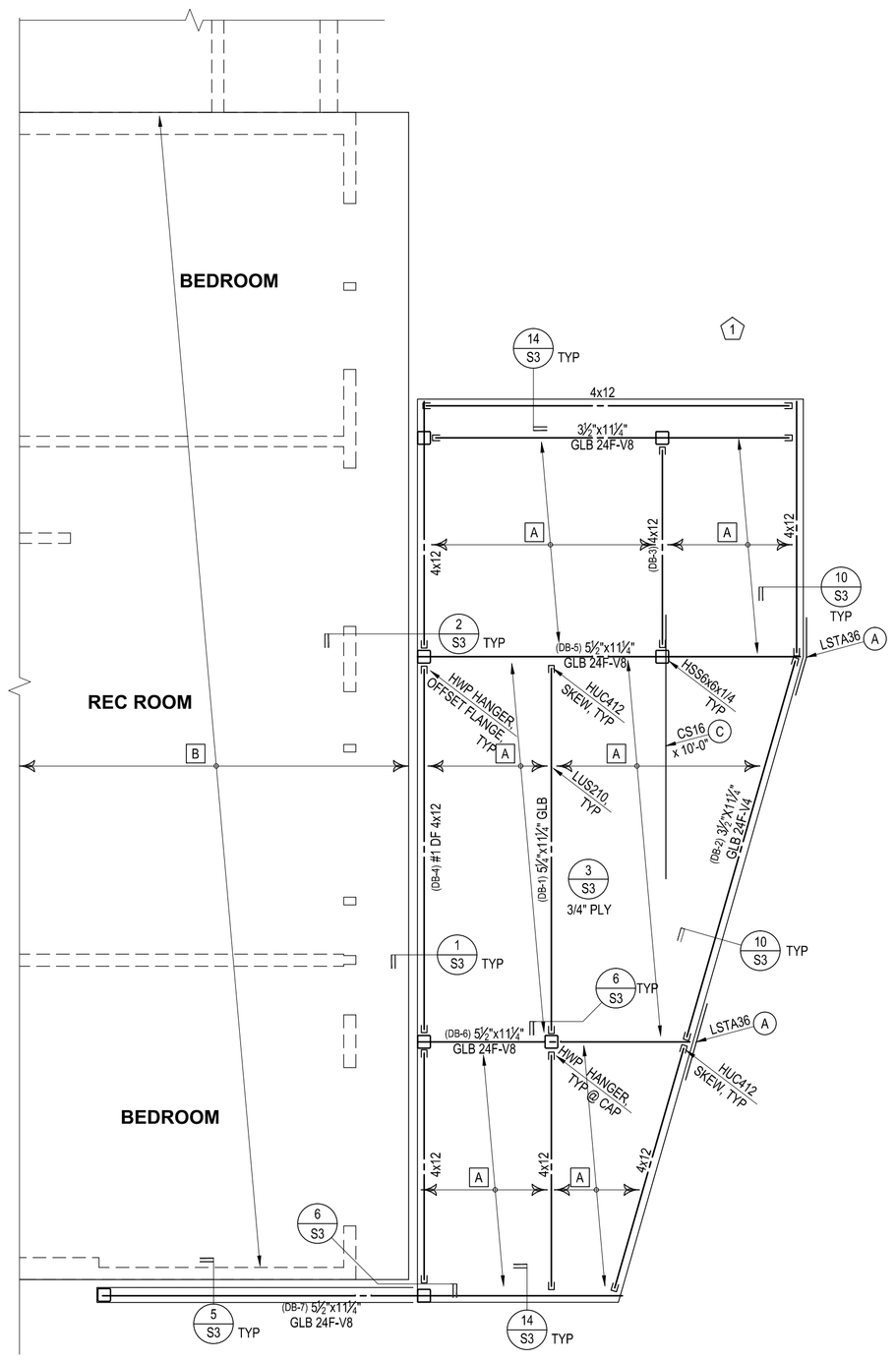

DECK / FLOOR FRAMING PLAN

SCALE 1/4" : 1'-0"

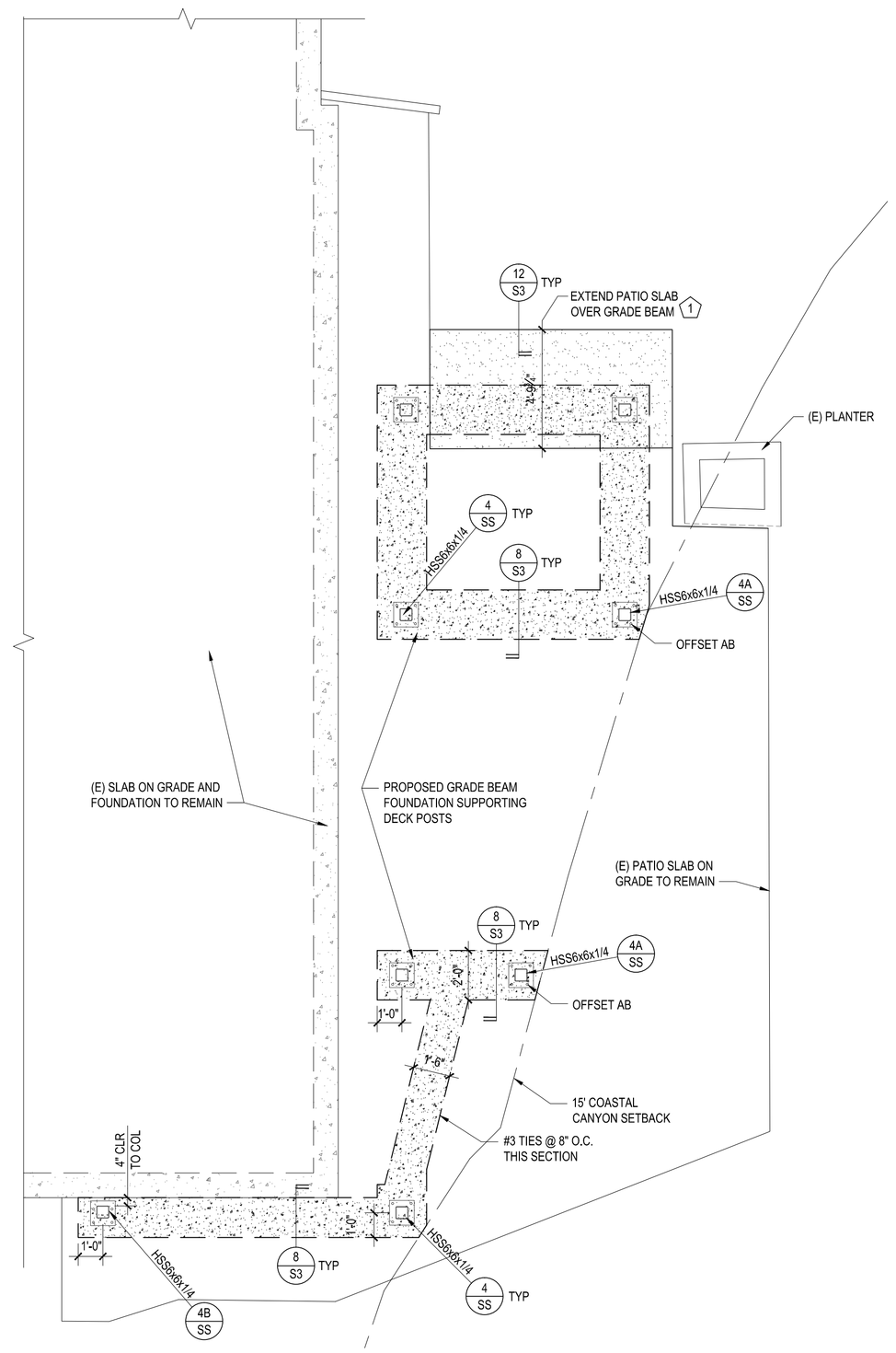

FOUNDATION PLAN

SCALE 1/4" : 1'-0"

reference

north

FOUNDATION NOTES:

1. SEE FRAMING NOTES ON SHEET S2.2
2. CONTRACTOR SHALL VERIFY ALL DIMENSIONS WITH ARCHITECTURAL DRAWINGS PRIOR TO POURING CONCRETE.
3. SEE SHEET S1 FOR GENERAL NOTES AND STRUCTURAL OBSERVATIONS REQUIREMENTS, NOTIFY ENGINEER ACCORDINGLY.
4. FOR BAR BENDS AND REINFORCING COVER SCHEDULE, SEE DETAILS 16/S3 A/S1
5. ALL ANCHOR BOLTS AND HOLDOWNS SHALL BE IN PLACE PRIOR TO FOUNDATION INSPECTION ALL STEEL IN CONTACT WITH TREATED WOOD INCLUDING ANCHOR BOLTS, THREADED RODS, NAILS AND HARDWARE SHALL BE HOT DIP ZINC COATED GALV. STL PER STRUCTURAL WOOD NOTE 16, SHEET S1.
6. WATER HEATERS AND MECHANICAL EQUIPMENT SHALL BE DESIGNED AND INSTALLED BY THE GENERAL CONTRACTOR TO BE SEISMICALLY ATTACHED TO THE STRUCTURAL SUPPORTS.
7. WHERE SPECIAL INSPECTION IS REQUIRED, THE DEPUTY INSPECTOR SHALL OBTAIN CITY BUILDING DIVISION CLEARANCE PRIOR TO ANY WORK. SPECIAL DEPUTY INSPECTION REPORT IS REQUIRED FOR STEEL PLACEMENT, CONCRETE STRENGTH, ETC. AND SHALL BE SUBMITTED TO CITY BUILDING INSPECTOR FOR APPROVAL.
8. NO TRENCHES OR EXCAVATIONS SHALL BE GREATER THAN 5'-0 " THE CONTRACTOR SHALL OBTAIN THE NECESSARY PERMITS CAL OSHA PRIOR TO THE ISSUANCE OF A BUILDING OR GRADING PERMIT.
9. PROVIDE 5% MINIMUM GRADE SLOPE AWAY FROM EXTERIOR FOOTINGS FOR MINIMUM 5'-0" & MINIMUM 2% ELSEWHERE. SEE ARCHITECTURAL DRAWINGS FOR ADDITIONAL INFORMATION.
10. NOTIFY ENGINEER PRIOR TO ANY FOUNDATION REMOVAL. LOCATE ALL UTILITIES PRIOR TO REMOVAL OF EXISTING SLAB, WHERE OCCURS.

GEOTECHNICAL REVIEW:

1. A FIELD MEMO IS REQUIRED FROM A LICENSED GEOTECHNICAL /CIVIL ENGINEER FOR SOIL INSPECTION AND VERIFICATION OF FOOTING DEPTH INTO COMPETENT SOIL. THE GEOTECHNICAL /CIVIL ENGINEER OR ENGINEERING GEOLOGIST MUST STAMP AND SIGN THE FIELD MEMO.PRIOR TO REQUESTING A BUILDING DEPARTMENT FOUNDATION INSPECTION, THE SOILS ENGINEER SHALL REVIEW AND APPROVE THE FOUNDATION EXCAVATIONS.

CONCRETE SLAB KEY:

1 FLATWORK SLAB: 5" CONC SLAB ON GRADE w/ #4 @ 12" O.C. MID DEPTH ON CHAIRS OVER 2" SAND PROVIDE EXPANSION JOINTS @ 10' O.C. EA WAY.

FRAMING NOTES:

1. ROOM NAME DENOTES ROOM BELOW THIS FLOOR LEVEL @ ELEVATION OF PLYWOOD @ THIS LEVEL.
2. SEE SHEET S1 FOR TYPICAL DETAILS AND GENERAL NOTES, SEE STRUCTURAL OBSERVATION REQUIREMENTS ON SHEET S1, NOTIFY ENGINEER ACCORDINGLY.
3. ALL FRAMING MEMBERS SHALL BE: 4x AND SMALLER- #2 D.F. /6x AND LARGER- #1 D.F.
4. ALL NAILING OF HARDWARE SHALL BE WITH COMMON NAILS. APPLY ALL STRAPS OVER PLYWOOD U.N.O. ON PLANS.
5. WHERE SPECIAL INSPECTION IS REQUIRED, THE DEPUTY INSPECTOR SHALL OBTAIN CITY OF SAN CLEMENTE BUILDING DIVISION CLEARANCE PRIOR TO ANY WORK.
6. ALL SHIMS SHALL BE GLUED WITH APA RATED GLUE.
7. CONTRACTOR SHALL VERIFY ALL DIMENSIONS.
8. SEE 3/S3 FOR PLYWOOD SPECIFICATIONS.
9. SEE 11/S3 FOR NAILED & BOLTED MULTIPLE JOISTS
10. ALL FLOOR SHEATHING SHALL BE ADHERED TO FLOOR JOISTS WITH APA RATED GLUE & NAILED U.N.O.
11. GLB REFERS TO GLU LAM BEAM, DF/DF 24F-V4 STANDARD CAMBER (INSTALL BEAM WITH CAMBER UP AT CANTLIEVER END WHERE OCCURS.
12. ANY PLUMBING DRAINPIPE OR VENT PIPE CUT THROUGH STUD WALLS SHALL BE 2x6 STUD WALLS, OR TWO (2) 2x4 STUD WALLS WITH PLYWOOD SHEAR PANEL ON NON-PLUMBING WALL.

FLOOR FRAMING KEY:

A DECK JOISTS: #2 DF 2x12 @ 16" O.C. w/ 3/4" PLY SLOPE JOIST TO DRAIN

B (E) FLOOR JOISTS: 4x @ 32" O.C. TO REMAIN

WALL LEGEND:

DASHED LINES BELOW PLY LEVEL SOLID LINES AT EDGE OF PLY AND STEPS

(E) 2x STUD WALLS TO REMAIN

(N) WALLS 2x4 STUDS @ 16" O.C., 2x6 WHERE NOTED

SEE STUD WALLS ABOVE

FRAMING LEGEND:

H = HEADER
DR = DROPPED — FL = TOP FLUSH w/ SHT'G
SL CEIL = SLOPED CEILING — FL CEIL = FLUSH @ CEILING
UP-SET = BOTTOM FLUSH, TOP VARIES
DRAG = DIAPHRAGM DRAG MEMBER BN PLY @ 4" O.C., UNO ON PLAN, ENTIRE LENGTH (2) ROWS OTHER THAN @ PLY EDGE

HARDWARE LEGEND:

A STRAP CENTERED ON BEAM SPLICE TOP, BOTTOM, OR FACE OF BM's USE ST6236 UNO. NOTE: INSTALL FACE OF BEAM STRAPS PRIOR TO HANGING PERPENDICULAR FLOOR BEAM /JOISTS

B ALIGN MEMBER WITH POST ABOVE.USE A34 EA SIDE POST TO SILL PLATE (BCO WHERE NOTED)

C COIL STRAP PER PLAN OVER PLY w/ 1/2 NAILING TO 2x FLAT OR FULL DEPTH 4x BLK'G (WHERE NOTED). AND FULL NAILING @ LAP w/ BEAM, TOP PL's OR FULL DEPTH 4x BLK'G OVER WALL MINIMUM LAP LENGTHS: CS16 = 18" CMSTC16 = 25" / CMST14 = 34" /CMST12= 45"

D COIL STRAP PER PLAN TO BOTTOM OF FRAMING w/ 1/2 NAILING TO FULL DEPTH BLK'G (BN PLY TO BLK'G). AND FULL NAILING @ LAP w/ BEAM OR TOP PL's MINIMUM LAP LENGTHS: CS16 = 18" CMSTC16 = 25" / CMST14 = 34" / CMST12 = 45"

California Coastal Commission
CDP 5-21-0079
Exhibit 2 p. 3 of 4

Issuance / Revisions

No.	Date	Description

BES
BUCHAN ENGINEERING STRUCTURES INC.
142 AVENIDA SANTA MARGARITA, SAN CLEMENTE CA 92672
(949) 395-0619
IAN@BESSSC.COM

DRAWINGS, SPECIFICATIONS, IDEAS, DESIGNS, AND ARRANGEMENTS REPRESENTED THEREIN ARE AND SHALL REMAIN THE PROPERTY OF THE BES, INC. NO PART THEREOF SHALL BE REPRODUCED, COPIED, ADAPTED, DISCLOSED, DISTRIBUTED, SOLD, PUBLISHED OR USED WITHOUT PRIOR WRITTEN CONSENT OF AND APPROPRIATE COMPENSATION TO THE BES, INC. VISUAL CONTACT WITH THE SHOP DRAWINGS OR SPECIFICATIONS SHALL CONSTITUTE CONCLUSIVE EVIDENCE OF ACCEPTANCE OF THESE RESTRICTIONS

VILORIA RESIDENCE
DECK ADDITION
225 W. MARQUITA
SAN CLEMENTE, CA

Project No.

Sheet Title:
FOUNDATION AND DECK/FLOOR FRAMING PLANS

Sheet No.
S2

Issued Date: November 14, 2020

California Coastal Commission
CDP 5-21-0079
Exhibit 2 p. 4 of 4

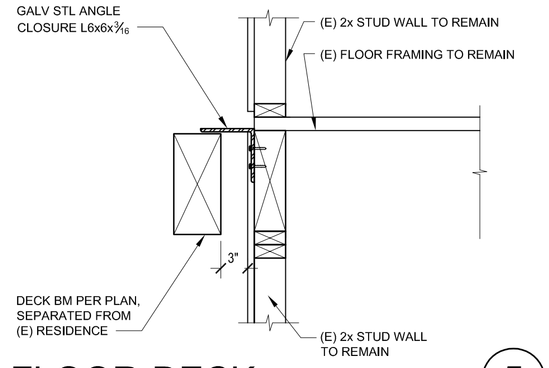

FLOOR-DECK (5)

N.T.S.

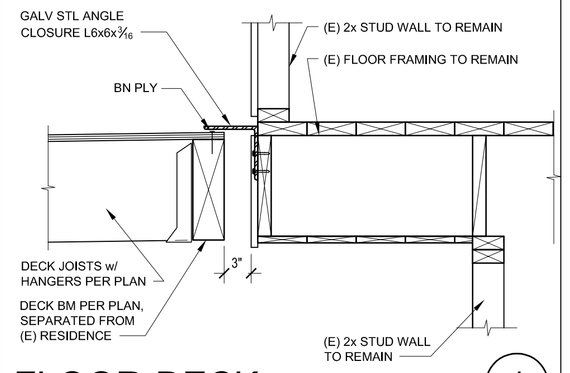

FLOOR-DECK (1)

N.T.S.

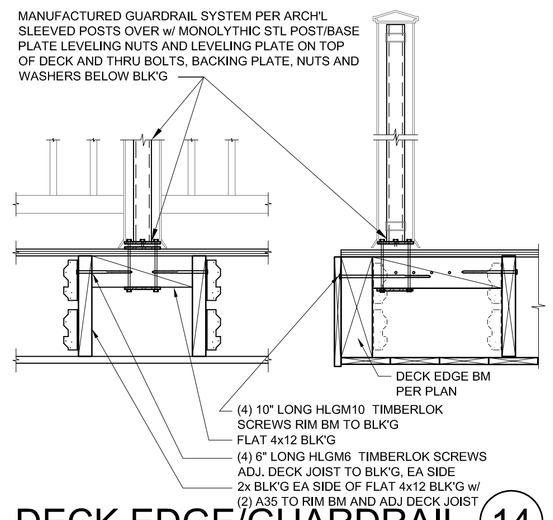

DECK EDGE/GUARDRAIL (14)

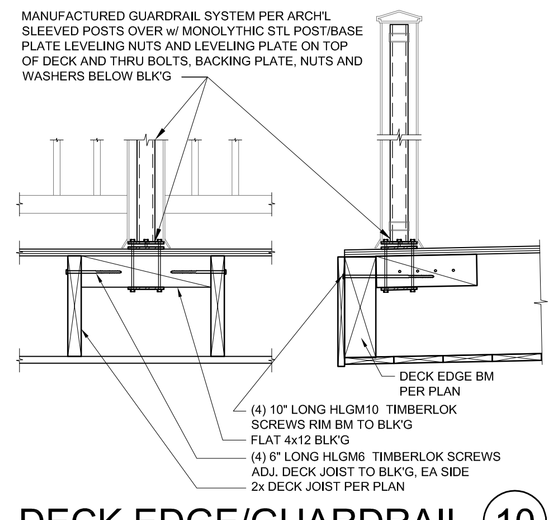

DECK EDGE/GUARDRAIL (10)

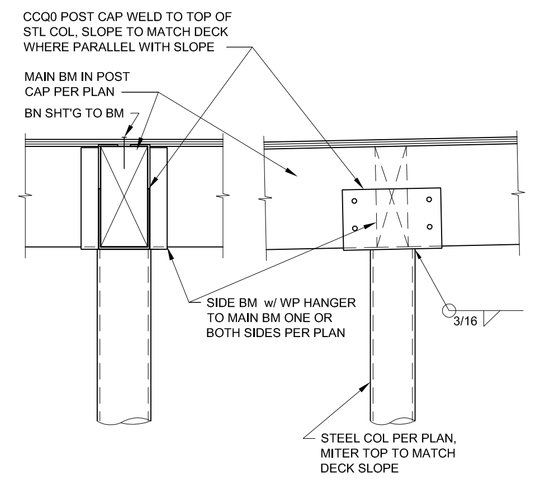

STL BM. @ STL COL (6)

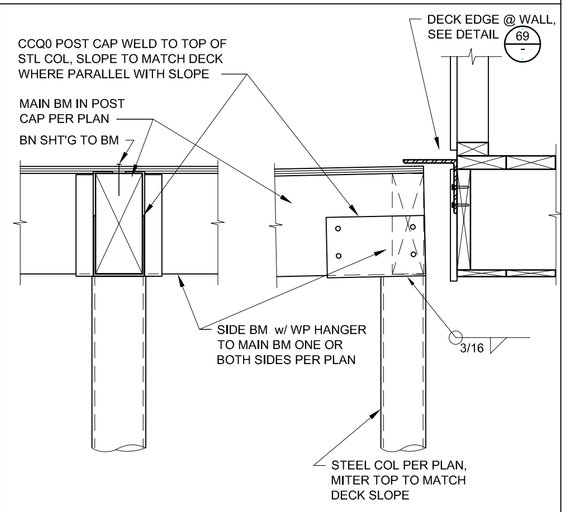

STL BM. @ STL COL (2)

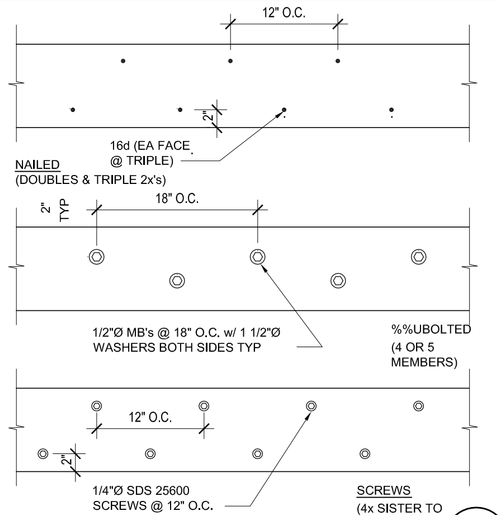

MULTIPLE MEMBER (11)

N.T.S. WT11

PLYWOOD SPECIFICATIONS:
ROOF PLYWOOD - 1/2" CDX P.I. 24/0, EXPOSURE 1 APA RATED PS1-07
DECK/ATTIC FLOOR PLYWOOD - 3/4" CDX T&G UNDERLAYMENT P.I. 40/20, STRUCT 1 APA RATED PS1-07
FLOOR PLYWOOD - 1⅛" CDX T&G UNDERLAYMENT P.I. 40/20, STRUCT 1 APA RATED PS1-07

OSB SPECIFICATIONS:
ROOF OSB - 1/2" EXPOSURE 1 P.I. 24/0 APA RATED PS2-07
DECK/ATTIC FLOOR OSB - 3/4" EXPOSURE 1 T&G P.I. 40/20 APA RATED PS2-07
FLOOR OSB - 3/4" EXPOSURE 1 T&G P.I. 40/20 APA RATED PS2-07

NAIL SPACING:
BN - 4" O.C. UNO ON PLAN
EN - 6" O.C. UNO ON PLAN
FN - 12" O.C. @ ROOF
- 10" O.C. @ FLOOR

NAILS:
8d NAILS 1/2" PLY
10d AT 3/4" PLY/ 16d @ 1 1/8" PLY FLOORS (RING SHANK) w/ APA RATED GLUE
MIN. EDGE DISTANCE TO PANEL & FRAMING:
2x MEMBERS - 3/8"
3x MEMBERS - 1/2"
PROVIDE 3x FRAMING WHERE NAIL SPACING @ PANEL JOINTS IS LESS THAN:
3" O.C. FOR 8d NAILS
4" O.C. FOR 10d NAILS
2x T&G DECKING w/ ½" PLY TOP:
PLY TO DK'G 8d NAILS @ 6/612
DK'G TO JOIST (2) 10d NAILS EA BD w/ ½" EDGE DIST

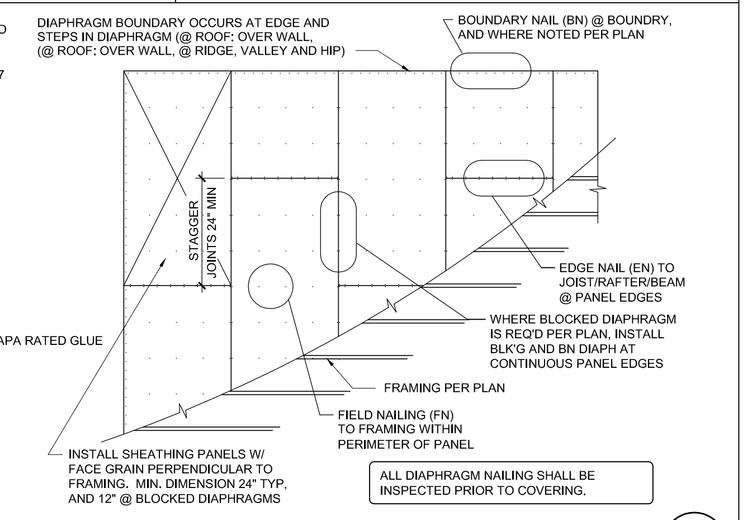

HORIZONTAL DIAPHRAGM SPECIFICATIONS (3)

WT1

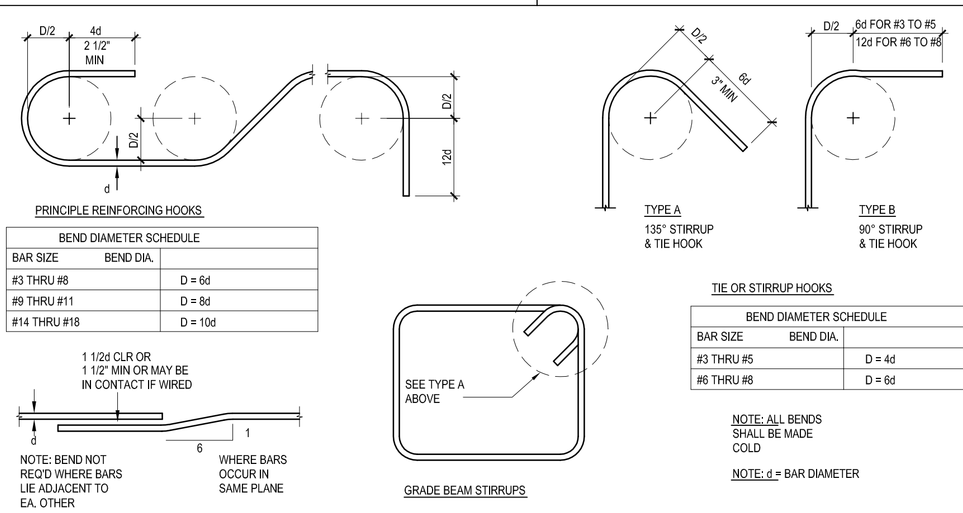

BEND DIAMETER SCHEDULE	
BAR SIZE BEND DIA.	
#3 THRU #8	D = 6d
#9 THRU #11	D = 8d
#14 THRU #18	D = 10d

TIE OR STIRRUP HOOKS

BEND DIAMETER SCHEDULE	
BAR SIZE BEND DIA.	
#3 THRU #5	D = 4d
#6 THRU #8	D = 6d

NOTE: ALL BENDS SHALL BE MADE COLD

NOTE: d = BAR DIAMETER

TYPICAL REINFORCEMENT BAR BENDS (16)

N.T.S. FT

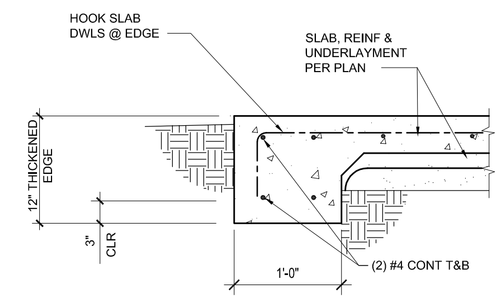

AT GRADE PATIO EDGE (12)

FS6

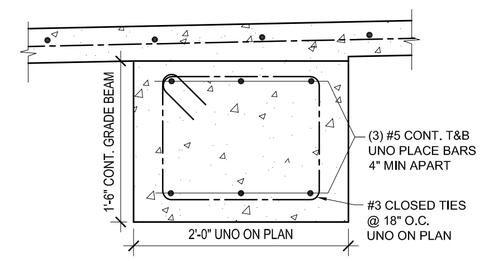

STL COL @ FTG (8)

NTS

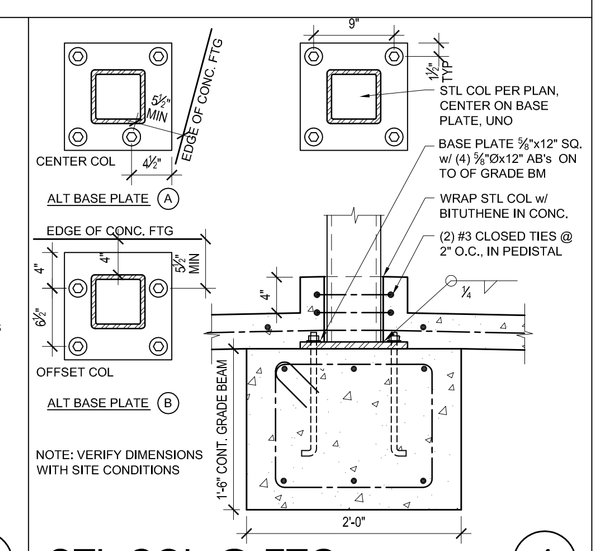

STL COL @ FTG (4)

NTS

Issuance / Revisions

No.	Date	Description

BES
BUCHAN ENGINEERING STRUCTURES INC.
2340 South El Camino Real STE 18 SAN CLEMENTE CA 92672
(949) 489-9786
IAINBUCHAN@COX.NET

DRAWINGS, SPECIFICATIONS, IDEAS, DESIGNS, AND ARRANGEMENTS REPRESENTED THEREBY ARE AND SHALL RMAIN THE PROPERTY OF THE BES, INC. NO PART THEREOF SHALL BE REPRODUCED, COPIED, ADAPTED: DISCLOSED, DISTRIBUTED, SOLD, PUBLISHED OR USED WITHOUT PRIOR WRITTEN CONSENT OF AND APPROPRIATE COMPENSATION TO THE BES, INC. VISUAL CONTACT WITH THE ABOVE DRAWINGS OR SPECIFICATIONS SHALL CONSTITUTE CONCLUSIVE EVIDENCE OF ACCEPTANCE OF THESE RESTRICTIONS

VILORIA RESIDENCE
DECK ADDITION
225 W. MARQUITA
SAN CLEMENTE, CA

Project No.

Sheet Title:
FOUNDATION & FRAMING DETAILS

Sheet No.
S3

Issued Date: November 14, 2020

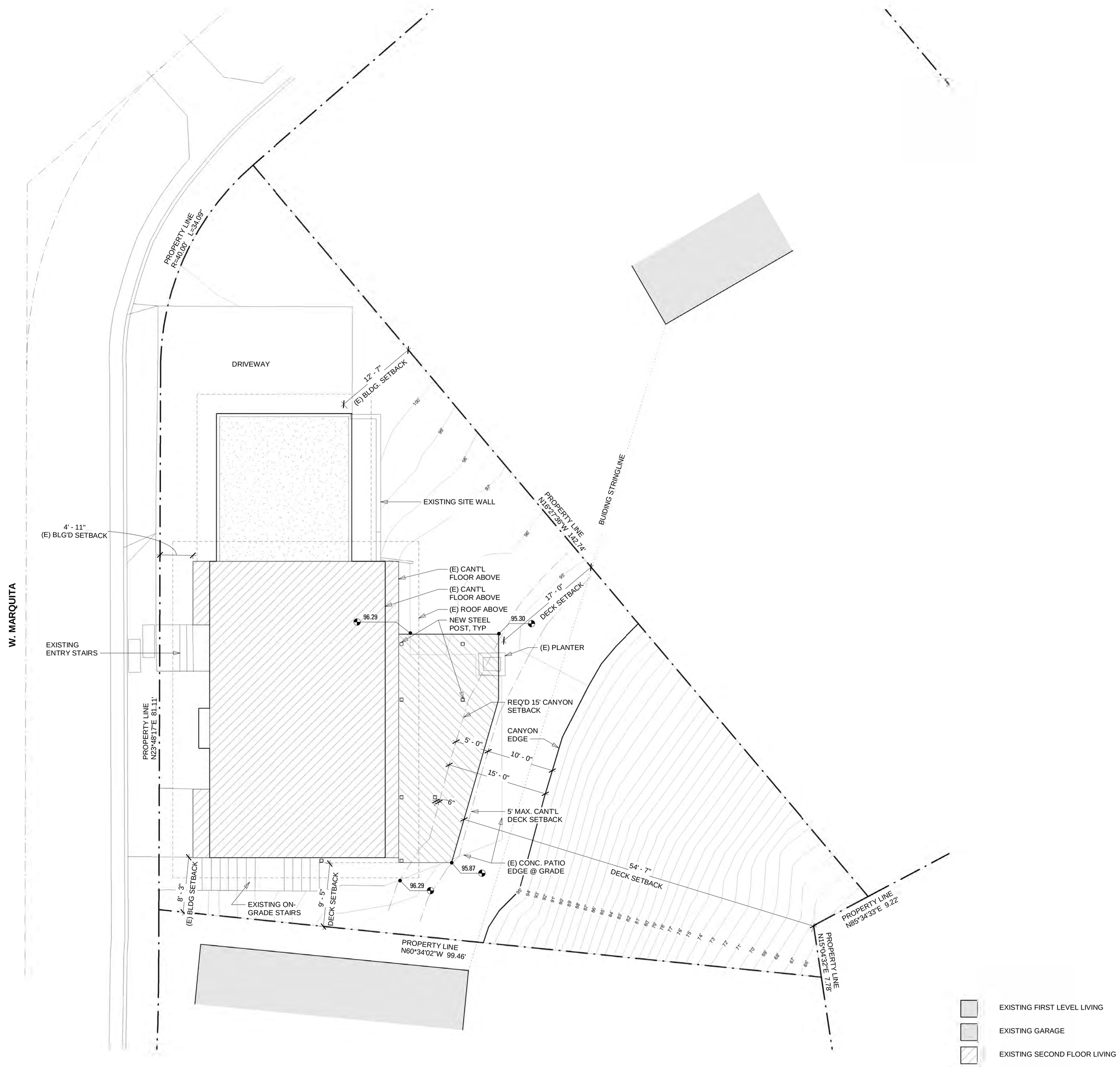

SITE LAN

1/8" = 1'-0"

California Coastal Commission
CDP 5-21-0079
Exhibit 3

S! EET INDE :

TS	PROJECT DATA/ SITE PLAN
A1	FLOOR PLANS
A2	EXTERIOR ELEVATIONS
1 OF 1	TOPOGRAPHIC SURVEY
S2.1	PRELIMINARY FOUNDATION PLAN

RO"ECT DATA:

#UILDIN$ ADDRESS:

EXISTING FIRST FLOOR LIVING	1,087 SF
EXISTING SECOND FLOOR LIVING	1,265 SF
TOTAL EXISTING LIVING AREA	2,352 SF
EXISTING GARAGE AREA	800 SF
PROPOSED SECOND FLOOR DECK	424 SF
LOT AREA	7,104 SF
EXISTING LOT COVERAGE **(22.8%)**	1,616 SF
LOT COVERAGE ADDITION	424 SF
TOTAL PROPOSED LOT COVERAGE **(28.6%)**	2,040 SF

#UILDIN$ ADDRESS:

225 W. MARQUITA
SAN CLEMENTE, CA 92672
APN: 692-076-04

OWNER:

OWNER: BEN VILORIA
ADDRESS: 225 W MARQUITA
SAN CLEMENTE, CA 92672
PH: (949) 463-2443
EMAIL: BEN@VILORIACONSTRUCTION.COM

#UILDIN$ CODES:

RESIDENTIAL	2019 CALIFORNIA RESIDENTIAL CODE (CRC)
FIRE	2019 CALIFORNIA FIRE CODE
PLUMBING	2019 CALIFORNIA PLUMBING CODE (CPC)
MECHANICAL	2019 CALIFORNIA MECHANICAL CODE (CMC)
ELECTRICAL	2019 CALIFORNIA ELECTRICAL CODE (CEC)
ENERGY	T24 - 2019 BUILDING ENERGY EFFICIENCY STANDARDS
CALGREEN	2019 CALIFORNIA GREEN BUILDING STANDARD CODE

THIS PROJECT SHALL COMPLY WITH ALL OTHER REGULATIONS AND ORDINANCES ADOPTED BY THE STATE GOVERNING AGENCIES.

RO"ECT CODE DATA:

TYPE OF CONSTRUCTION:	V-B **NON-SPRINKLERED**
EXISTING OCCUPANCY CLASSIFICATION:	R-3/U
NUMBER OF STORIES:	TWO

CONSULTANTS:

#UILDIN$ DESI$ NER/ STRUCTURAL EN$ INEER:

B.E.S., INC.
2340 SOUTH EL CAMINO REAL, SUITE 18
SAN CLEMENTE, CALIFORNIA 92672
CONTACT: IAIN BUCHAN
TEL. 949.489.9786

SURVEYOR:

BORCHARD SURVEYING AND MAPPING, INC
815 CALLE PUENTE
SAN CLEMENTE, CALIFORNIA 92672
TEL. 949.439.4682

SCO E O WOR/ :

SECOND LEVEL DECK ADDITION TO EXISTING TWO-STORY SINGLE FAMILY RESIDENCE

VICINITY MA :

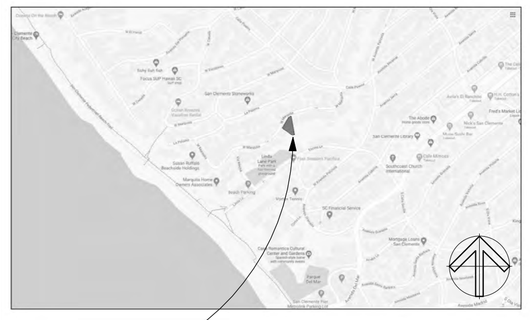

RO"ECT SITE

REVISION SCHEDULE

NO	DATE	DESCRIPTION

BES
BUCHAN ENGINEERING STRUCTURES INC.
142 AVENIDA SANTA MARGARITA, SAN CLEMENTE CA 92672
(949) 395 0619
IAIN@BESSCSC.COM

DRAWINGS, SPECIFICATIONS, IDEAS, DESIGNS, AND ARRANGEMENTS REPRESENTED THEREBY ARE AND SHALL REMAIN THE PROPERTY OF BES, INC. NO PART THEREOF SHALL BE DISCLOSED TO OTHERS, AND NOT DISCLOSED, DISTRIBUTED, SOLD, PUBLISHED OR USED WITHOUT PRIOR WRITTEN CONSENT OF AND APPROPRIATE COMPENSATION TO THE BES, INC. VISUAL CONTACT WITH THE ABOVE DRAWINGS OR SPECIFICATIONS SHALL CONSTITUTE CONCLUSIVE EVIDENCE OF ACCEPTANCE OF THESE RESTRICTIONS

VILORIA RESIDENCE
DEC/ ADDITION
225 W MARQUITA
SAN CLEMENTE, CA 92672

Project No.
2020-01

Sheet Title:
RO"ECT IN O
SITE LAN

Sheet No.
TS

Issued Date: 9/7/20

California Coastal Commission
CDP 5-21-0079
Exhibit 4

Figure 4-2-A Potential Habitat Study Areas

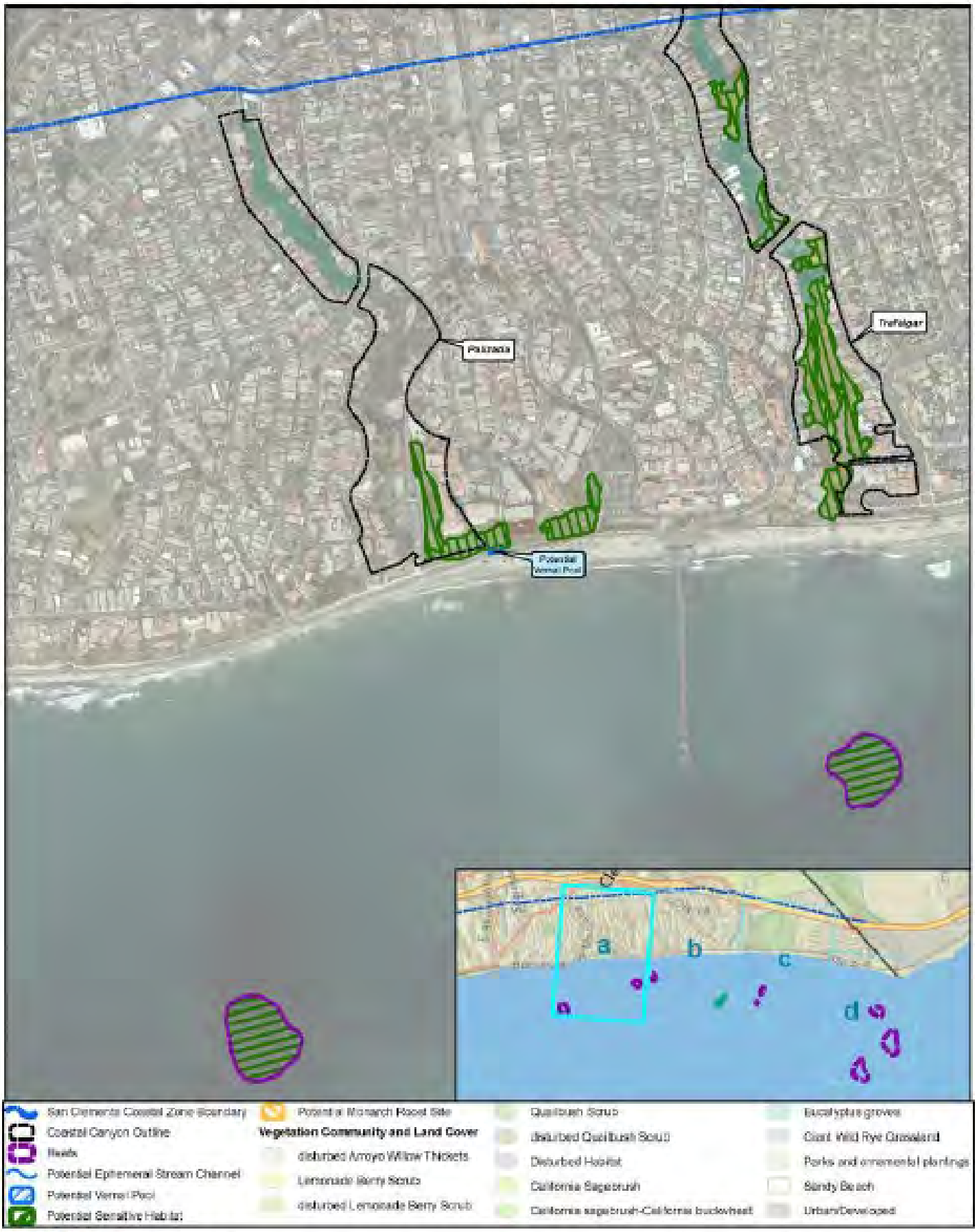

FIGURE 4-2-A

Potential Habitat Study Areas - Map A

0 0.04 0.08 0.16 0.24 Miles

Local Coastal Program - Land Use Plan
March 2018

SOURCE: Google Earth Maps 2015

Biological Inventory Report for San Clemente LCP

CDP 5-21-0079
Exhibit 5