CALIFORNIA COASTAL COMMISSION
CENTRAL COAST DISTRICT
725 FRONT STREET, SUITE 300
SANTA CRUZ, CA 95060
PHONE: (831) 427-4863
FAX: (831) 427-4877
WEB: WWW.COASTAL.CA.GOV

F19a

3-22-0165 (MURRAY STREET BRIDGE IMPROVEMENTS)
DECEMBER 16, 2022 HEARING
EXHIBITS

Table of Contents

Exhibit 1: Regional Vicinity Map
Exhibit 2: Project Location Map
Exhibit 3: Project Plans
Exhibit 4: Proposed Mitigation Measures and BMPs

Exhibit 1
3-22-0165
Page 1 of 1

Exhibit 2
3-22-0165
Page 1 of 1

SEISMIC RETROFIT
CONTRACT NO. 3

CITY OF SANTA CRUZ
PUBLIC WORKS DEPARTMENT

PROJECT PLANS FOR

THE CONSTRUCTION OF THE
MURRAY STREET BRIDGE AT SANTA CRUZ HARBOR SEISMIC RETROFIT/BARRIER REPLACEMENT (BR. NO. 36C0108)
FEDERAL AID PROJECT NO. STPLZ-5025(048)

PREPARED BY

TRC

SACRAMENTO, CALIFORNIA

SHEET INDEX

SHEET No.	SHEET DESCRIPTION
1	TITLE SHEET
2	SURVEY CONTROL
3-4	TYPICAL SECTIONS
5-7	PLAN AND PROFILES
8-9	CONSTRUCTION DETAILS - REMOVAL PLANS
10-18	CONSTRUCTION DETAILS
19-20	TEMPORARY WATER POLLUTION CONTROL PLANS
21-22	CONTOUR GRADING PLANS
23-24	DRAINAGE PLANS
25-26	DRAINAGE PROFILES
27	DRAINAGE QUANTITIES
28-30	UTILITY PLANS
31	WATERLINE STANDARD CONSTRUCTION NOTES
32-35	WATERLINE PLAN AND PROFILES
36-55	SANITARY SEWER FORCE MAIN PLANS
56-80	STAGE CONSTRUCTION/TRAFFIC HANDLING PLANS
81-84	PAVEMENT DELINEATION AND SIGN PLANS
85	PAVEMENT DELINEATION & SIGN QUANTITIES
86-87	SUMMARY OF QUANTITIES
88-94	PLANTING PLANS
95-97	ELECTRICAL PLANS
98-112	RETAINING WALL PLANS
113-167	STRUCTURE PLANS

CITY OF SANTA CRUZ STANDARD DETAILS STANDARD MANHOLE; MANHOLE FRAME & COVER; CATCH BASIN (TYPE B); CURB, GUTTER & SIDEWALK; CURB AND BERM; SIGN INSTALLATION
DATE: CURRENT

ABREVIATIONS

SC.....CITY OF SANTA CRUZ
Co. SC.....COUNTY OF SANTA CRUZ
C,G,&SW.....CURB, GUTTER, AND SIDEWALK
Std.....STANDARD
Det.....DETAIL
BVCS.....BEGIN VERTICAL CURVE STATION
BVCE.....BEGIN VERTICAL CURVE ELEVATION
EVCS.....END VERTICAL CURVE STATION
EVCE.....END VERTICAL CURVE ELEVATION
RL.....RESTRAINED LENGTH

CALTRANS STANDARD PLAN SHEET NUMBER
DETAIL NUMBER

REGISTERED PROFESSIONAL ENGINEER
MARK A. IMBRIANI
No. 36634
Exp. 6/30/22
CIVIL
STATE OF CALIFORNIA

PROJECT MANAGER
TRC

APPROVED: _____
ASSISTANT DIRECTOR OF PUBLIC WORKS
CITY ENGINEER RCE XXXXXXX
CITY OF SANTA CRUZ

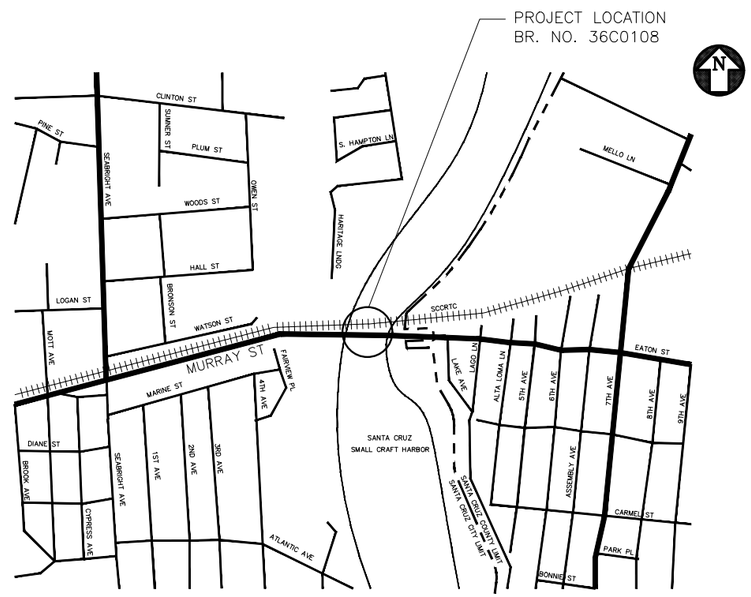

VICINITY MAP

LEGEND

UTILITY	SYMBOL	OWNER
Exist WATER	—w—	CITY OF SANTA CRUZ WATER DEPARTMENT
Exist NATURAL GAS	—g—	PACIFIC GAS AND ELECTRIC COMPANY
Exist SANITARY SEWER	—s—	CITY OF SANTA CRUZ PUBLIC WORKS DEPARTMENT
Exist ELECTRICAL	—e—	PACIFIC GAS AND ELECTRIC COMPANY
Exist OVERHEAD ELECTRICAL	—e—(oh)—	AT&T
Exist TELEPHONE	—t—	AT&T BROADBAND
Exist TELEVISION	—tv—	
Exist STORM DRAIN	—sd—	CITY OF SANTA CRUZ PUBLIC WORKS DEPARTMENT
Exist FIRE HYDRANT		CITY OF SANTA CRUZ WATER DEPARTMENT
Exist CATCH BASIN		
Exist SEWER/STORM MANHOLE		

CONSTRUCTION NOTES:

1. THE CONTRACTOR IS RESPONSIBLE FOR THE INTENT OF THESE PLANS AND SHALL REPORT ANY DISCREPANCIES FOUND IN THEM TO THE ENGINEER PRIOR TO CONSTRUCTION.
2. UNDERGROUND UTILITY LOCATIONS AND DEPTHS, WHERE SHOWN ON PLANS, ARE BASED ON UTILITY COMPANY RECORDS AND ARE FOR GENERAL INFORMATION. ALL CONTRACTORS ARE RESPONSIBLE FOR VERIFICATION OF LOCATIONS FOR ALL EXISTING UTILITIES IN THE FIELD.
3. EMERGENCY TELEPHONE NUMBERS:

POLICE DEPARTMENT	911
FIRE DEPARTMENT	911
CITY ENGINEER'S OFFICE	(831) 420-5160
CITY PARKS & REC. DEPARTMENT	(831) 420-5270
COUNTY SEWER DEPARTMENT	(831) 420-6036
CITY TRAFFIC MAINTENANCE	(831) 420-5520
CITY WATER DEPARTMENT	(831) 420-5210
PG&E	1-800-743-5000
AT&T	611
U.S.A.	(800) 642-2444
AT&T BROADBAND	(831) 425-1739

4. CITY INSPECTOR SHALL BE NOTIFIED 24 HOURS IN ADVANCE OF ANY CONSTRUCTION.
5. THE CONTRACTOR SHALL BE RESPONSIBLE FOR PRESERVATION OF STREET TREES. SHOULD A STREET TREE BECOME DAMAGED DURING CONSTRUCTION, THE ENGINEER SHALL DETERMINE IF THE TREE IS TO BE REPLACED BY THE CONTRACTOR. REPLACEMENT TREE(S) SHALL BE 24-INCH WIDE BOX TREE, THE SPECIES TO BE DETERMINED BY THE ENGINEER.
6. THE CONTRACTOR SHALL COMPLY WITH ALL ENVIRONMENTAL PERMITS ISSUED FOR THIS PROJECT.
7. A 72 HOUR ADVANCE NOTICE SHALL BE GIVEN TO THE SANTA CRUZ WATER DEPARTMENT BEFORE CONSTRUCTION ON WATER SYSTEM, AND BEFORE SCHEDULING CONNECTIONS TO THE EXISTING SYSTEM AT (831) 420-5210.
8. PROVIDE 5 WORKING DAYS ADVANCE NOTICE TO SANTA CRUZ WATER DEPARTMENT TO ADJUST EXISTING WATER METER BOXES AND GATE VALVE BOXES AT (831) 420-5210

100% SUBMITTAL
NOT FOR CONSTRUCTION

SEISMIC RETROFIT
CONTRACT NO. 3

DATE:
08-27-21

DRAWING NO:
1

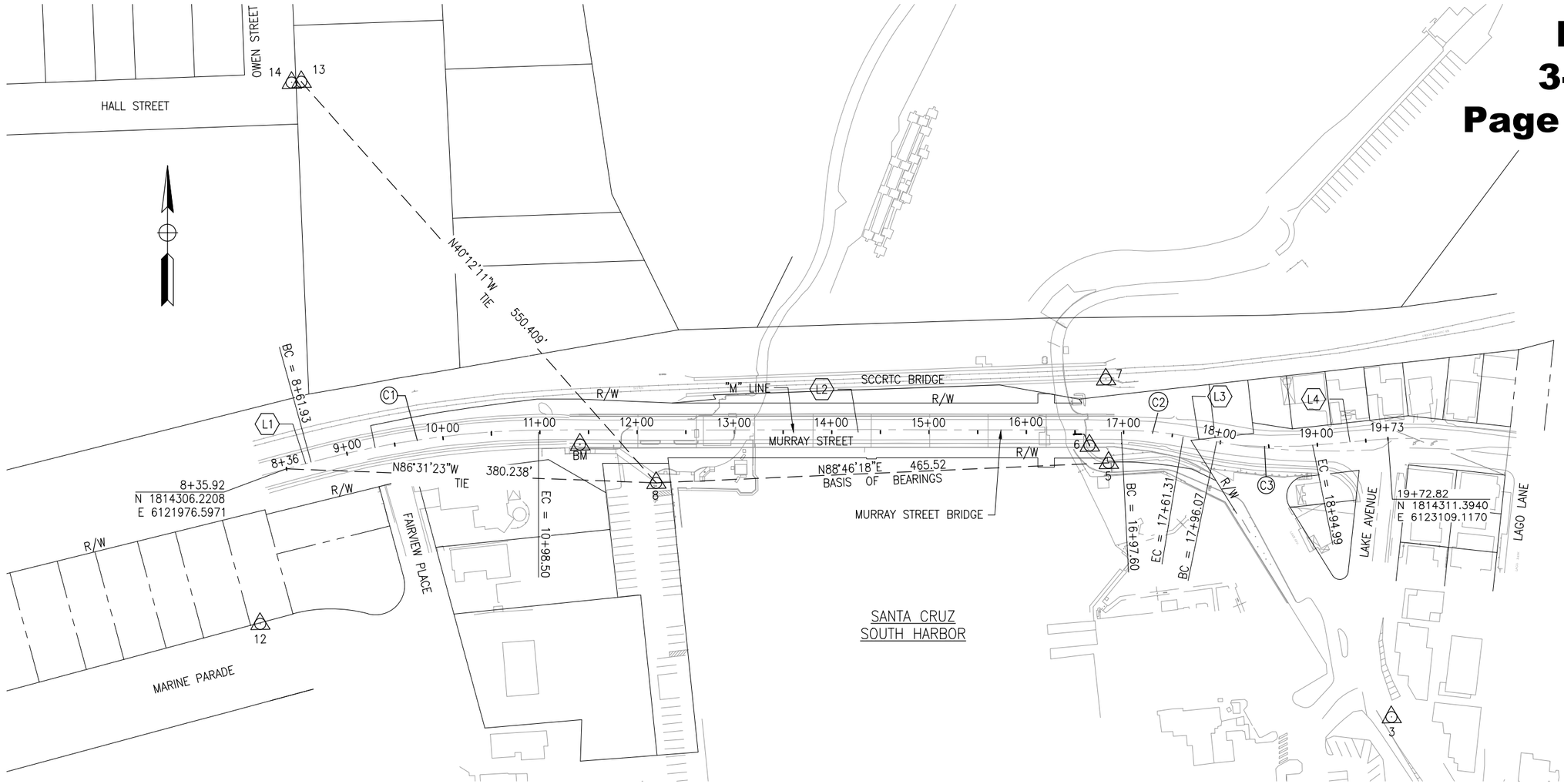

LEGEND

R/W — RIGHT-OF-WAY LINE

— — — — PROPERTY LINE

△ CONTROL POINT

THE HORIZONTAL DATUM IS NAD83.

THE VERTICAL DATUM IS THE CITY OF SANTA CRUZ DATUM WHICH IS BASED ON NGVD29.

FOR COMPLETE RIGHT-OF-WAY AND ACCURATE ACCESS DATA, SEE RIGHT-OF-WAY RECORD MAPS AT CITY OF SANTA CRUZ OFFICE.

BASIS OF BEARINGS

N 88°46'18"E L=465.52 BETWEEN CONTROL POINTS #5 AND #8. SAID BEARING BEING A CALIFORNIA COORDINATE SYSTEM (NAD 83) ZONE 3 GRID BEARING DETERMINED BY GPS MEASUREMENTS.

BENCHMARK

PT. #13 – SANTA CRUZ CITY BENCHMARK F6-16, A LEAD PLUG AND TAG IN THE TOP OF THE CONCRETE CURB AT THE EASTERN SIDE OF OWEN STREET AT ITS INTERSECTION WITH HALL STREET. ELEVATION 50.85 FEET (NGVD 29).

NOTE:

ALL SURVEY MONUMENTS TO BE SALVAGED TO THE CITY. PLACE SURVEY MONUMENT IN WIDENED BRIDGE SIDEWALK.

CONTROL POINTS

PT#	NORTH	EAST	ELEV
3	1814025.2030	6123106.2900	23.07
5	1814293.1390	6122821.5470	11.26
6	1814311.3530	6122802.3950	22.80
7	1814379.1030	6122820.6670	28.44
8	1814283.1600	6122356.1350	6.16
10	1814616.9070	6123477.7190	52.56
12	1814147.4180	6121945.9200	48.53
13	1814703.5410	6122000.8370	50.85
14	1814703.0360	6121990.8330	50.90
BM	1814324.2195	6122278.6151	30.95

LINE DATA

LINE	DISTANCE	BEARING
L1	26.01'	N76°14'17"E
L2	599.10'	S88°42'04"E
L3	34.76'	S80°06'44"E
L4	77.83'	N86°33'11"E

CURVE DATA

CURVE	R	Δ	T	L
C1	900.00'	15°03'39"	118.97'	236.57'
C2	425.00'	08°35'20"	31.91'	63.71'
C3	425.00'	13°20'06"	49.68'	98.91'

100% SUBMITTAL NOT FOR CONSTRUCTION

NOTE:
THE CONTRACTOR SHALL VERIFY ALL CONTROLLING FIELD DIMENSIONS BEFORE ORDERING OR FABRICATING ANY MATERIAL.

SC-1

APPROVED FOR PROJECT CONTROL INFORMATION ONLY

REGISTERED PROFESSIONAL ENGINEER JUSTIN L. CONKLIN No. [illegible] 30-23 CIVIL STATE OF CALIFORNIA — REGISTERED ENGINEER – CIVIL

TRC Engineers or its officers or agents shall not be responsible for the accuracy or completeness of electronic copies of this plan sheet

CITY OF SANTA CRUZ

PREPARED FOR THE
CITY OF SANTA CRUZ
PUBLIC WORKS DEPARTMENT

	BY	CHECKED
DESIGN	A. BEDAL	J. CONKLIN
DETAILS	A. BEDAL	J. CONKLIN
QUANTITIES		

ORIGINAL SCALE IN INCHES FOR REDUCED PLANS 0 1 2 3

TRC
MARK IMBRIANI
PROJECT MANAGER

BRIDGE NO. 36C0108
CONTRACT NO.
EA NO.

MURRAY STREET BRIDGE
SEISMIC RETROFIT AND BARRIER REPLACEMEN
SURVEY CONTROL

DISREGARD PRINTS BEARING EARLIER REVISION DATES
REVISION DATES (PRELIMINARY STAGE ONLY)

SCALE 1"=60'
SHEET 2 OF 167
VAULT NO. XXXXXXX

Drawing name: H:\1161 – Santa Cruz\Road\Sheets\002-SCTL01.dwg Layout Tab: Survey Control Aug 26,2021 – 12:13pm MBeem

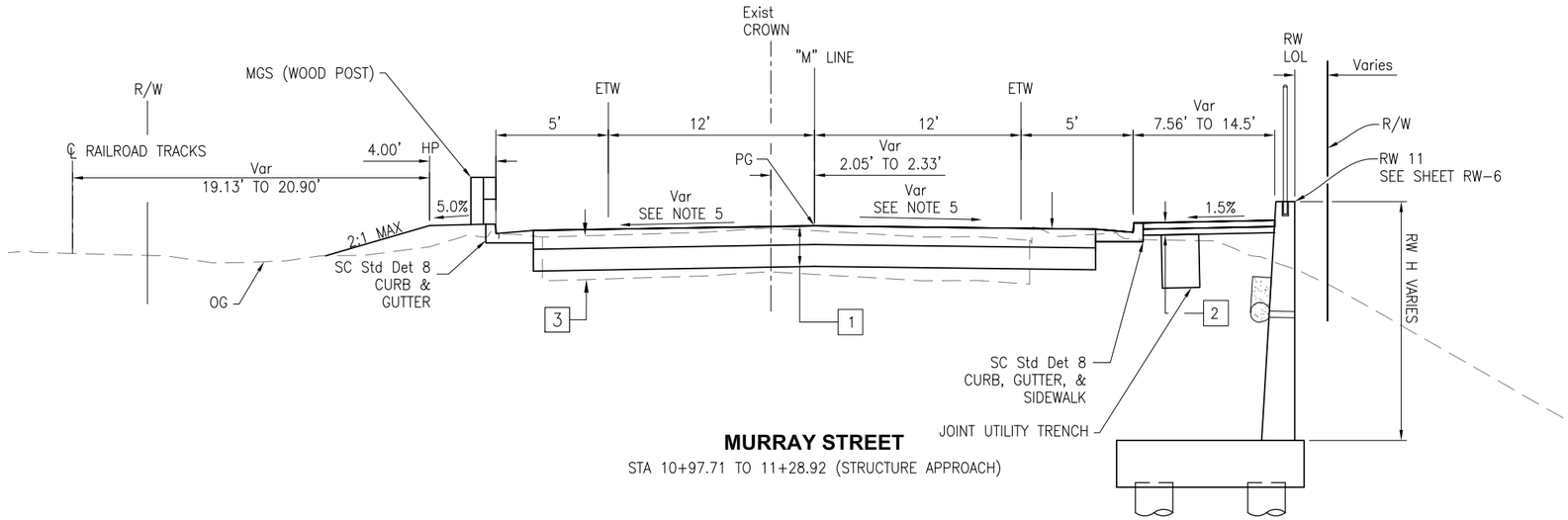

MURRAY STREET
STA 10+97.71 TO 11+28.92 (STRUCTURE APPROACH)

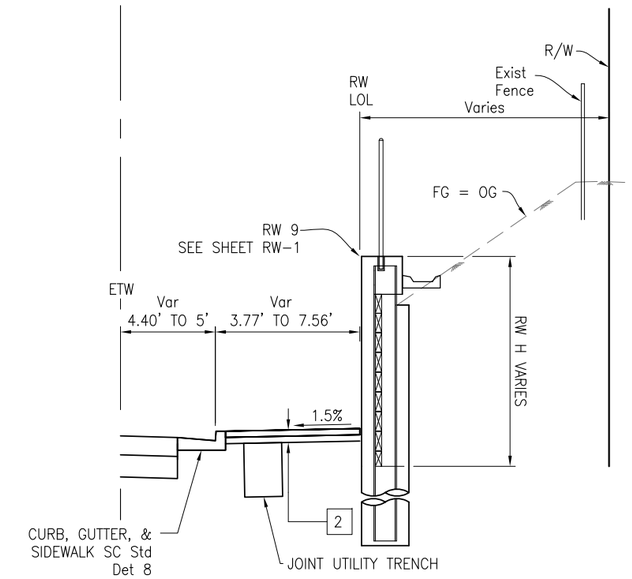

STA 9+70.63 TO 10+97.71

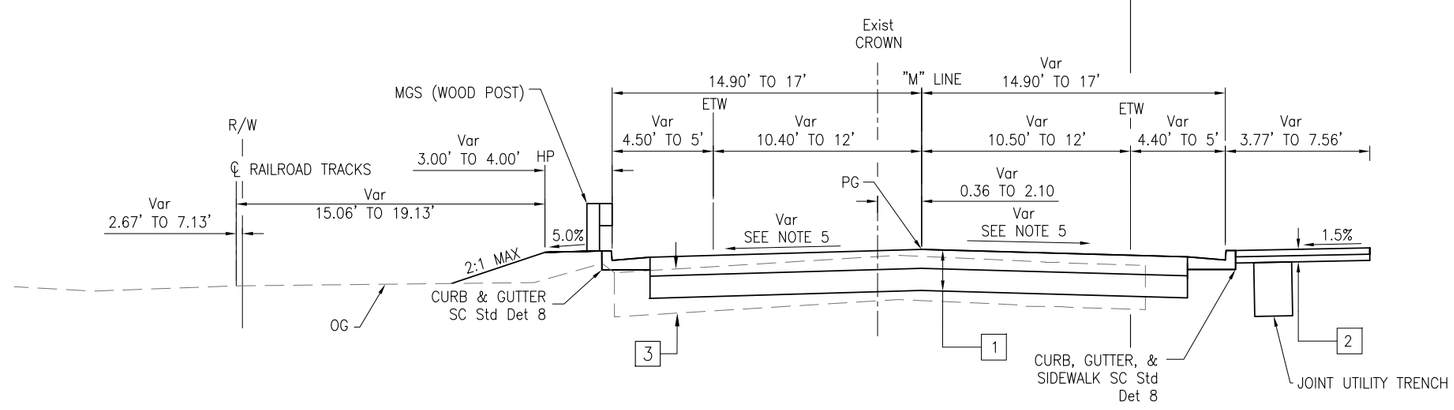

MURRAY STREET
STA 9+39.99 TO 9+70.63

PAVEMENT STRUCTURAL SECTIONS

1 — 0.50' HOT MIX ASPHALT (TYPE A)
0.58' AB (CLASS 2)

2 — 0.33' PCC CONCRETE
0.33' AB (CLASS 2)

3 — Exist
0.20' AC
0.30' AB

NOTES

1. DIMENSIONS OF THE PAVEMENT STRUCTURES (STRUCTURAL SECTIONS) ARE SUBJECT TO THE TOLERANCES SPECIFIED IN THE STANDARD SPECIFICATIONS.

2. EXACT LOCATIONS AND TYPES OF DIKES, CURBS, AND GUARD RAILING ARE SHOWN ON THE PLAN AND PROFILE SHEETS AND THE SUMMARY OF QUANTITIES SHEETS

3. REMOVE EXISTING STRUCTURAL SECTION.

4. DIMENSIONS MEASURED FROM THE EDGE SHOULDER ARE TO THE FLOW LINE OF THE GUTTER.

5. SEE SHEETS C-1 AND C-2 FOR SUPERELEVATION AND PAVEMENT ELEVATION DETAILS.

100% SUBMITTAL
NOT FOR CONSTRUCTION

NOTE:
THE CONTRACTOR SHALL VERIFY ALL CONTROLLING FIELD DIMENSIONS BEFORE ORDERING OR FABRICATING ANY MATERIAL.

X-1

REGISTERED PROFESSIONAL ENGINEER
JUSTIN L. CONKLIN
No. 5[illegible]
CIVIL
STATE OF CALIFORNIA

REGISTERED ENGINEER – CIVIL

TRC Engineers or its officers or agents shall not be responsible for the accuracy or completeness of electronic copies of this plan sheet

CITY OF SANTA CRUZ

PREPARED FOR THE
CITY OF SANTA CRUZ
PUBLIC WORKS DEPARTMENT

DESIGN	BY A. BEDAL	CHECKED J. CONKLIN
DETAILS	BY A. BEDAL	CHECKED J. CONKLIN
QUANTITIES	BY	CHECKED

ORIGINAL SCALE IN INCHES FOR REDUCED PLANS 0 1 2 3

TRC
MARK IMBRIANI
PROJECT MANAGER

BRIDGE NO. 36C0108
CONTRACT NO.
EA NO.

MURRAY STREET BRIDGE
SEISMIC RETROFIT AND BARRIER REPLACEMENT
TYPICAL SECTIONS

DISREGARD PRINTS BEARING EARLIER REVISION DATES
REVISION DATES (PRELIMINARY STAGE ONLY)

SCALE NTS
SHEET 3 OF 167
VAULT NO. XXXXXXX

Drawing name: H:\1161 – Santa Cruz\Road\Sheets\003-TS01.dwg Layout Tab: X-1 Oct 11,2021 – 3:07pm ABedal

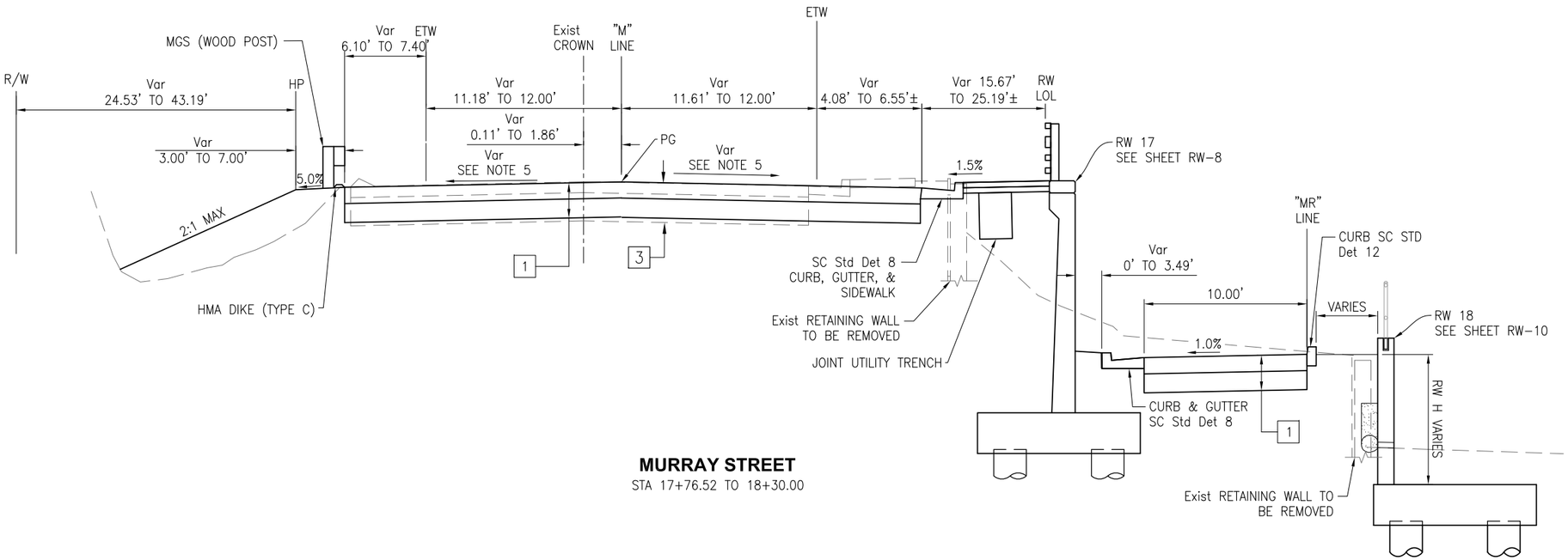

MURRAY STREET
STA 17+76.52 TO 18+30.00

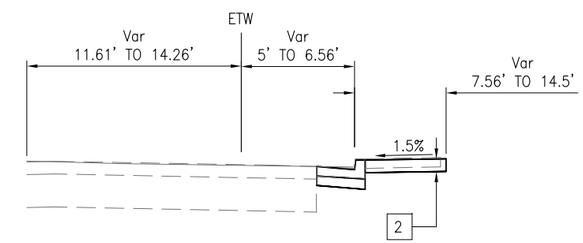

MURRAY STREET
STA 18+30.00 TO 18+65.00

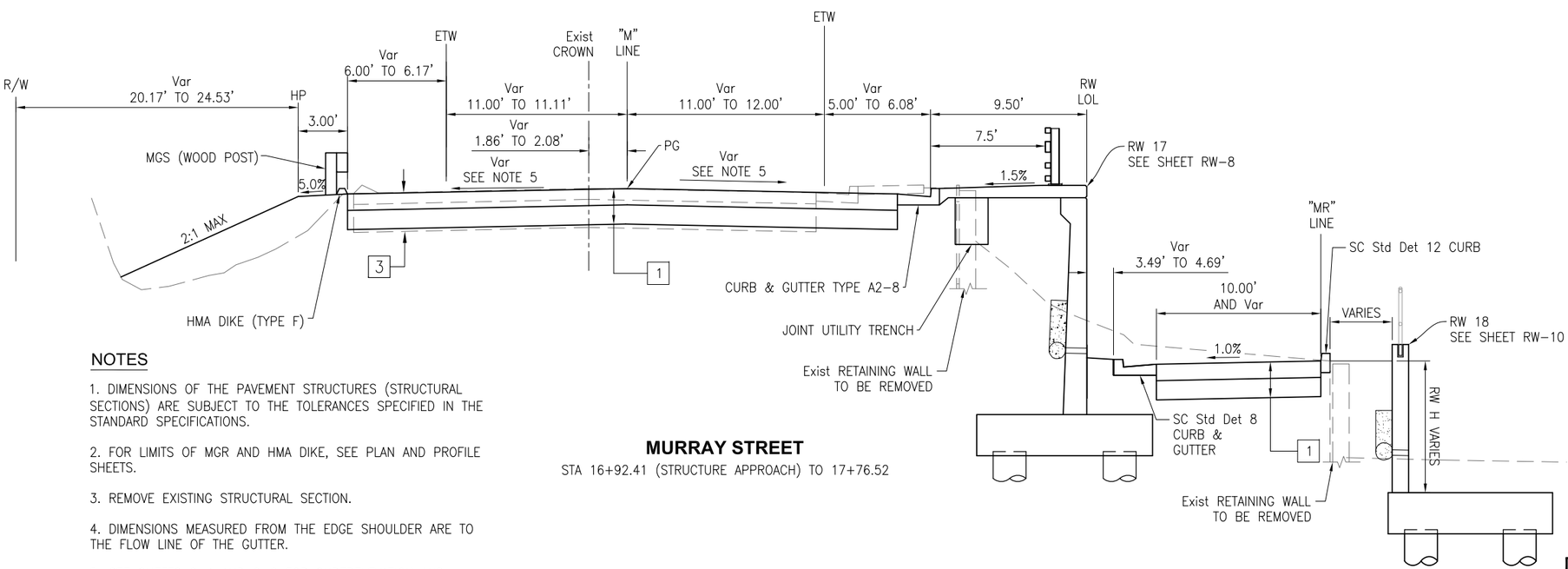

MURRAY STREET
STA 16+92.41 (STRUCTURE APPROACH) TO 17+76.52

NOTES

1. DIMENSIONS OF THE PAVEMENT STRUCTURES (STRUCTURAL SECTIONS) ARE SUBJECT TO THE TOLERANCES SPECIFIED IN THE STANDARD SPECIFICATIONS.

2. FOR LIMITS OF MGR AND HMA DIKE, SEE PLAN AND PROFILE SHEETS.

3. REMOVE EXISTING STRUCTURAL SECTION.

4. DIMENSIONS MEASURED FROM THE EDGE SHOULDER ARE TO THE FLOW LINE OF THE GUTTER.

5. SEE SHEETS C-1 AND C-2 FOR SUPERELEVATION AND PAVEMENT DETAILS.

100% SUBMITTAL NOT FOR CONSTRUCTION

NOTE:
THE CONTRACTOR SHALL VERIFY ALL CONTROLLING FIELD DIMENSIONS BEFORE ORDERING OR FABRICATING ANY MATERIAL.

X-2

REGISTERED PROFESSIONAL ENGINEER JUSTIN L. CONKLIN No. 5[illegible] 30-23 CIVIL STATE OF CALIFORNIA
REGISTERED ENGINEER – CIVIL
TRC Engineers or its officers or agents shall not be responsible for the accuracy or completeness of electronic copies of this plan sheet

CITY OF SANTA CRUZ

PREPARED FOR THE
CITY OF SANTA CRUZ
PUBLIC WORKS DEPARTMENT

DESIGN	BY A. BEDAL	CHECKED J. CONKLIN
DETAILS	BY A. BEDAL	CHECKED J. CONKLIN
QUANTITIES	BY	CHECKED

ORIGINAL SCALE IN INCHES FOR REDUCED PLANS 0 1 2 3

TRC
MARK IMBRIANI
PROJECT MANAGER

BRIDGE NO. 36C0108
CONTRACT NO.
EA NO.

MURRAY STREET BRIDGE
SEISMIC RETROFIT AND BARRIER REPLACEMENT
TYPICAL SECTIONS

DISREGARD PRINTS BEARING EARLIER REVISION DATES
REVISION DATES (PRELIMINARY STAGE ONLY)

SCALE NTS
SHEET 4 OF 167
VAULT NO. XXXXXXX

Drawing name: H:\1161 – Santa Cruz\Road\Sheets\003-TS01.dwg Layout Tab: X-2 Oct 11,2021 – 3:08pm ABedal

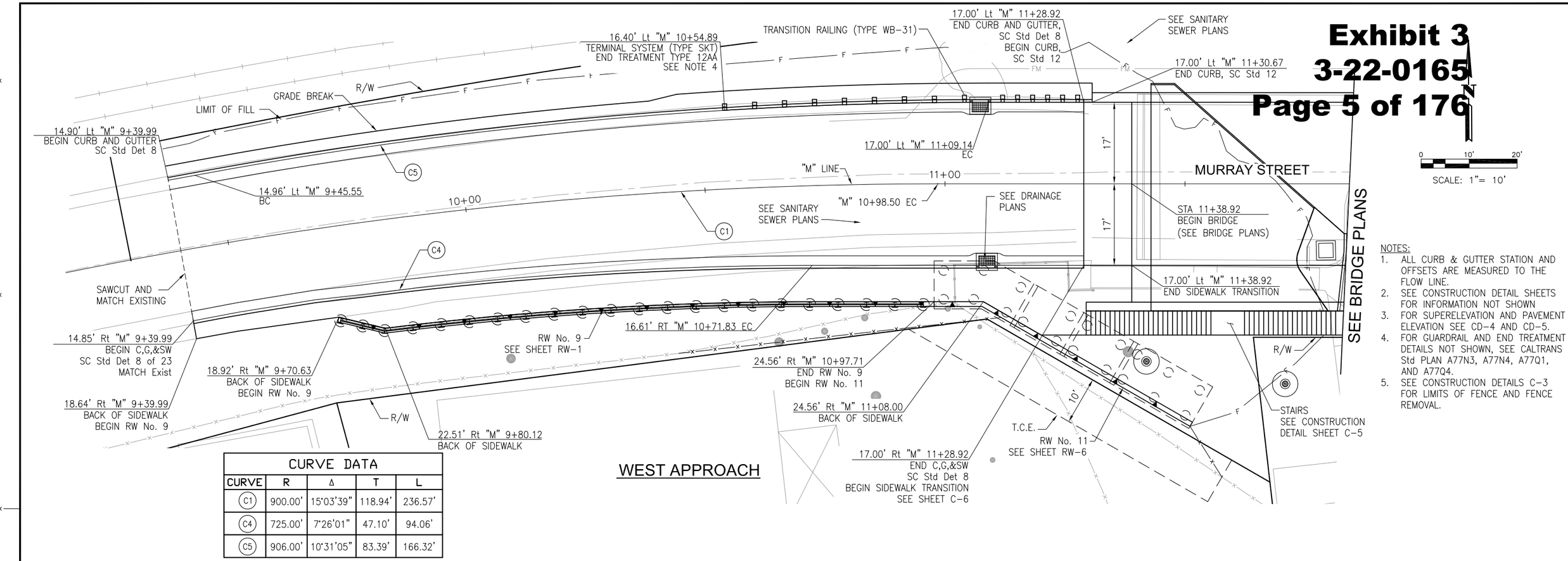

NOTES:
1. ALL CURB & GUTTER STATION AND OFFSETS ARE MEASURED TO THE FLOW LINE.
2. SEE CONSTRUCTION DETAIL SHEETS FOR INFORMATION NOT SHOWN
3. FOR SUPERELEVATION AND PAVEMENT ELEVATION SEE CD-4 AND CD-5.
4. FOR GUARDRAIL AND END TREATMENT DETAILS NOT SHOWN, SEE CALTRANS Std PLAN A77N3, A77N4, A77Q1, AND A77Q4.
5. SEE CONSTRUCTION DETAILS C-3 FOR LIMITS OF FENCE AND FENCE REMOVAL.

CURVE DATA

CURVE	R	Δ	T	L
C1	900.00'	15°03'39"	118.94'	236.57'
C4	725.00'	7°26'01"	47.10'	94.06'
C5	906.00'	10°31'05"	83.39'	166.32'

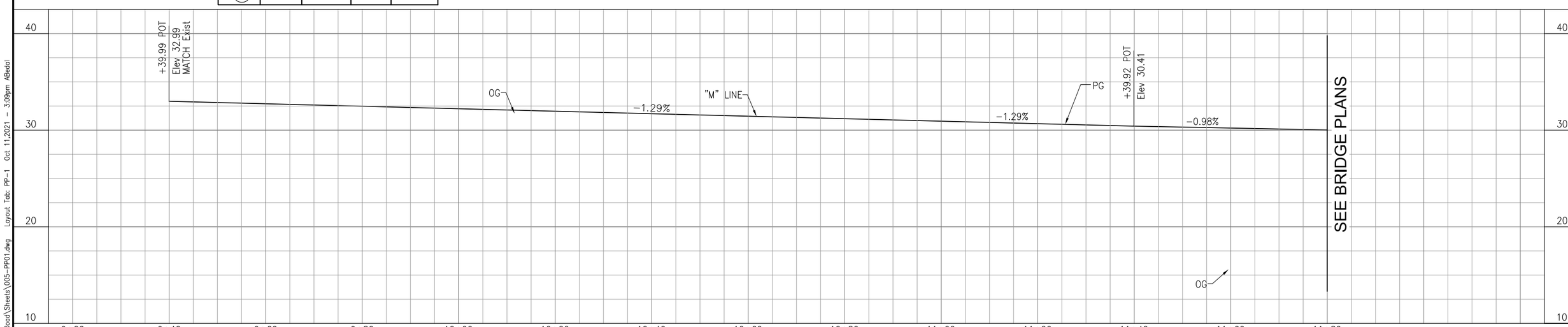

PROFILE
Horiz: 1"=10'
Vert: 1"=5'

100% SUBMITTAL
NOT FOR CONSTRUCTION

NOTE:
THE CONTRACTOR SHALL VERIFY ALL CONTROLLING FIELD DIMENSIONS BEFORE ORDERING OR FABRICATING ANY MATERIAL.

PP-1

REGISTERED ENGINEER – CIVIL
TRC Engineers or its officers or agents shall not be responsible for the accuracy or completeness of electronic copies of this plan sheet

PREPARED FOR THE
CITY OF SANTA CRUZ
PUBLIC WORKS DEPARTMENT

	BY	CHECKED
DESIGN	A. BEDAL	J. CONKLIN
DETAILS	A. BEDAL	J. CONKLIN
QUANTITIES		

ORIGINAL SCALE IN INCHES FOR REDUCED PLANS 0 1 2 3

TRC
MARK IMBRIANI
PROJECT MANAGER

BRIDGE NO. 36C0108
CONTRACT NO.
EA NO.

MURRAY STREET BRIDGE
SEISMIC RETROFIT AND BARRIER REPLACEMENT
PLAN AND PROFILE

DISREGARD PRINTS BEARING EARLIER REVISION DATES
REVISION DATES (PRELIMINARY STAGE ONLY)

SCALE 1"=10'
SHEET 5 OF 167
VAULT NO. XXXXXXX

Drawing name: H:\1161 – Santa Cruz\Road\Sheets\005-PP01.dwg Layout Tab: PP-1 Oct 11,2021 – 3:09pm ABedal

CURVE DATA				
CURVE	R	Δ	T	L
C2	425.00'	08°35'20"	31.91'	63.71'
C3	425.00'	13°20'06"	49.68'	98.91'
C6	550.00'	9°51'29"	47.43'	94.63'
C7	400.00'	10°32'59"	36.93'	73.65'

Exhibit 3
3-22-0165
Page 6 of 176

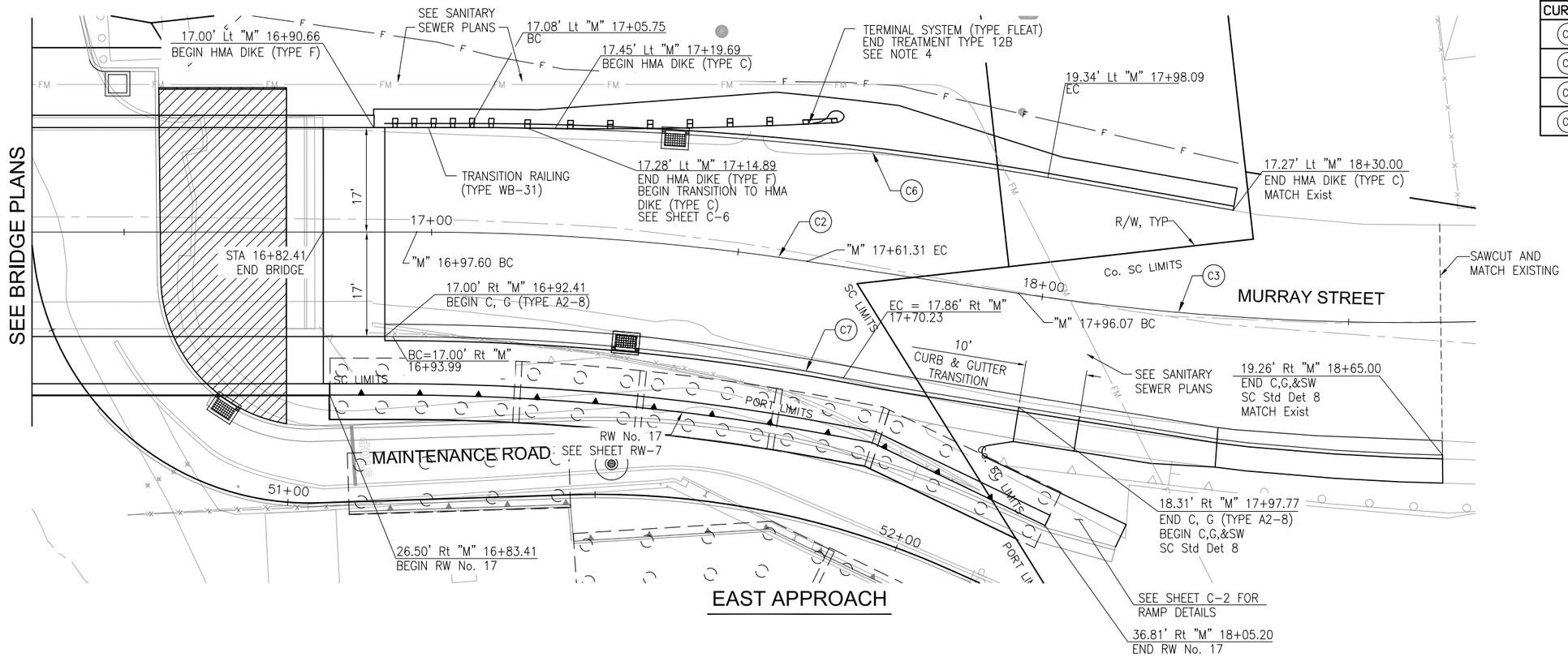

SCALE: 1"= 10'

NOTES:
1. ALL CURB & GUTTER OFFSETS ARE MEASURED TO THE FLOW LINE.
2. SEE CONSTRUCTION DETAIL SHEETS FOR INFORMATION NOT SHOWN.
3. SEE PP-3 FOR MAINTENANCE ROAD DETAIL.
4. FOR GUARDRAIL AND END TREATMENT DETAILS NOT SHOWN, SEE CALTRANS Std PLAN A77N3, A77N4, A77Q1, AND A77Q4.

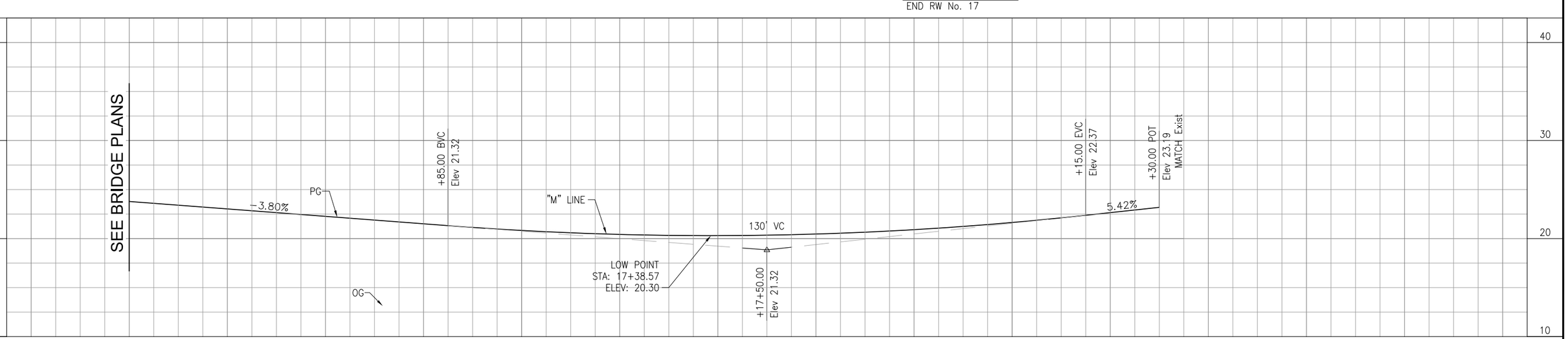

PROFILE
Horiz: 1"=10'
Vert: 1"=5'

100% SUBMITTAL
NOT FOR CONSTRUCTION

NOTE:
THE CONTRACTOR SHALL VERIFY ALL CONTROLLING FIELD DIMENSIONS BEFORE ORDERING OR FABRICATING ANY MATERIAL.

PP-2

REGISTERED ENGINEER – CIVIL
TRC Engineers or its officers or agents shall not be responsible for the accuracy or completeness of electronic copies of this plan sheet

PREPARED FOR THE
CITY OF SANTA CRUZ
PUBLIC WORKS DEPARTMENT

DESIGN	BY A. BEDAL	CHECKED J. CONKLIN
DETAILS	BY A. BEDAL	CHECKED J. CONKLIN
QUANTITIES	BY	CHECKED

ORIGINAL SCALE IN INCHES FOR REDUCED PLANS 0 1 2 3

TRC
MARK IMBRIANI
PROJECT MANAGER

BRIDGE NO. 36C0108
CONTRACT NO.
EA NO.

MURRAY STREET BRIDGE
SEISMIC RETROFIT AND BARRIER REPLACEMENT
PLAN AND PROFILE

DISREGARD PRINTS BEARING EARLIER REVISION DATES
REVISION DATES (PRELIMINARY STAGE ONLY)

SCALE 1"=10'
SHEET 6 OF 167
VAULT NO. XXXXXXX

Drawing name: H:\1161 – Santa Cruz\Road\Sheets\005-PP01.dwg Layout Tab: PP-2 Oct 11,2021 – 3:10pm ABedal

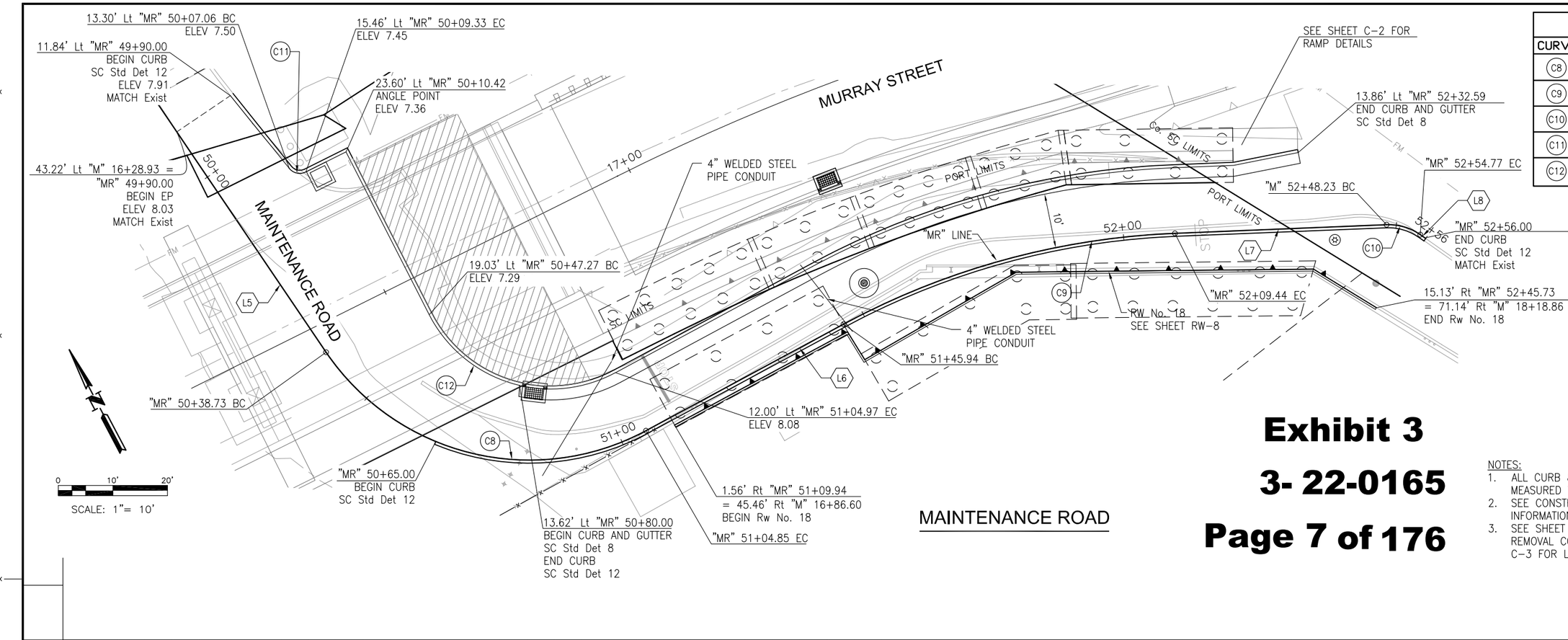

CURVE DATA				
CURVE	R	Δ	T	L
C8	45.00'	84°11'17"	40.65'	66.12'
C9	140.00'	25°59'04"	32.30'	63.49'
C10	10.00'	37°26'56"	3.39'	6.54'
C11	2.50'	77°28'18"	2.01'	3.38'
C12	25.00'	91°14'47"	25.55'	39.81'

LINE DATA		
LINE	DISTANCE	BEARING
L5	58.73'	S06°21'07"E
L6	41.09'	N89°27'36"E
L7	38.80'	S64°33'21"E
L8	1.23'	S27°06'25"E

Exhibit 3

3- 22-0165

Page 7 of 176

NOTES:
1. ALL CURB & GUTTER OFFSETS ARE MEASURED TO THE FLOW LINE.
2. SEE CONSTRUCTION DETAIL SHEETS FOR INFORMATION NOT SHOWN HEREON
3. SEE SHEET DEM-2 FOR LIMITS OF FENCE REMOVAL CONSTRUCTION DETAILS SHEET C-3 FOR LIMITS OF NEW FENCE.

MAINTENANCE ROAD

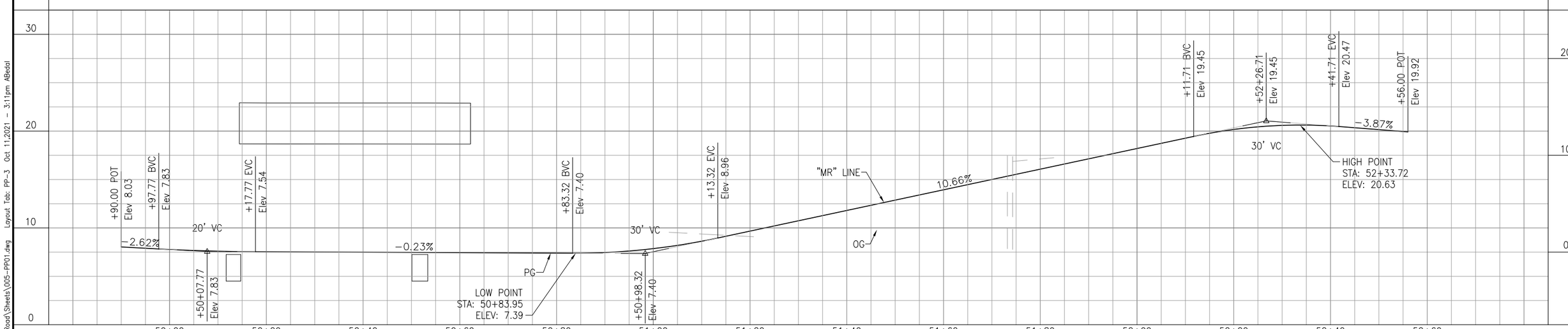

PROFILE
Horiz: 1"=10'
Vert: 1"=5'

100% SUBMITTAL NOT FOR CONSTRUCTION

NOTE:
THE CONTRACTOR SHALL VERIFY ALL CONTROLLING FIELD DIMENSIONS BEFORE ORDERING OR FABRICATING ANY MATERIAL.

PP-3

REGISTERED PROFESSIONAL ENGINEER JUSTIN L. CONKLIN No. 5-50-23 CIVIL STATE OF CALIFORNIA
REGISTERED ENGINEER – CIVIL
TRC Engineers or its officers or agents shall not be responsible for the accuracy or completeness of electronic copies of this plan sheet

CITY OF SANTA CRUZ

PREPARED FOR THE
CITY OF SANTA CRUZ
PUBLIC WORKS DEPARTMENT

DESIGN	BY A. BEDAL	CHECKED J. CONKLIN	
DETAILS	BY A. BEDAL	CHECKED J. CONKLIN	
QUANTITIES	BY	CHECKED	
ORIGINAL SCALE IN INCHES FOR REDUCED PLANS	0 1 2 3		

TRC
MARK IMBRIANI
PROJECT MANAGER

BRIDGE NO. 36C0108
CONTRACT NO.
EA NO.

MURRAY STREET BRIDGE
SEISMIC RETROFIT AND BARRIER REPLACEMENT
PLAN AND PROFILE

DISREGARD PRINTS BEARING EARLIER REVISION DATES
REVISION DATES (PRELIMINARY STAGE ONLY)

SCALE 1"=10'
SHEET 7 OF 167
VAULT NO. XXXXXXX

Drawing name: H:\1161 – Santa Cruz\Road\Sheets\005-PP01.dwg Layout Tab: PP-3 Oct 11,2021 – 3:11pm ABedal

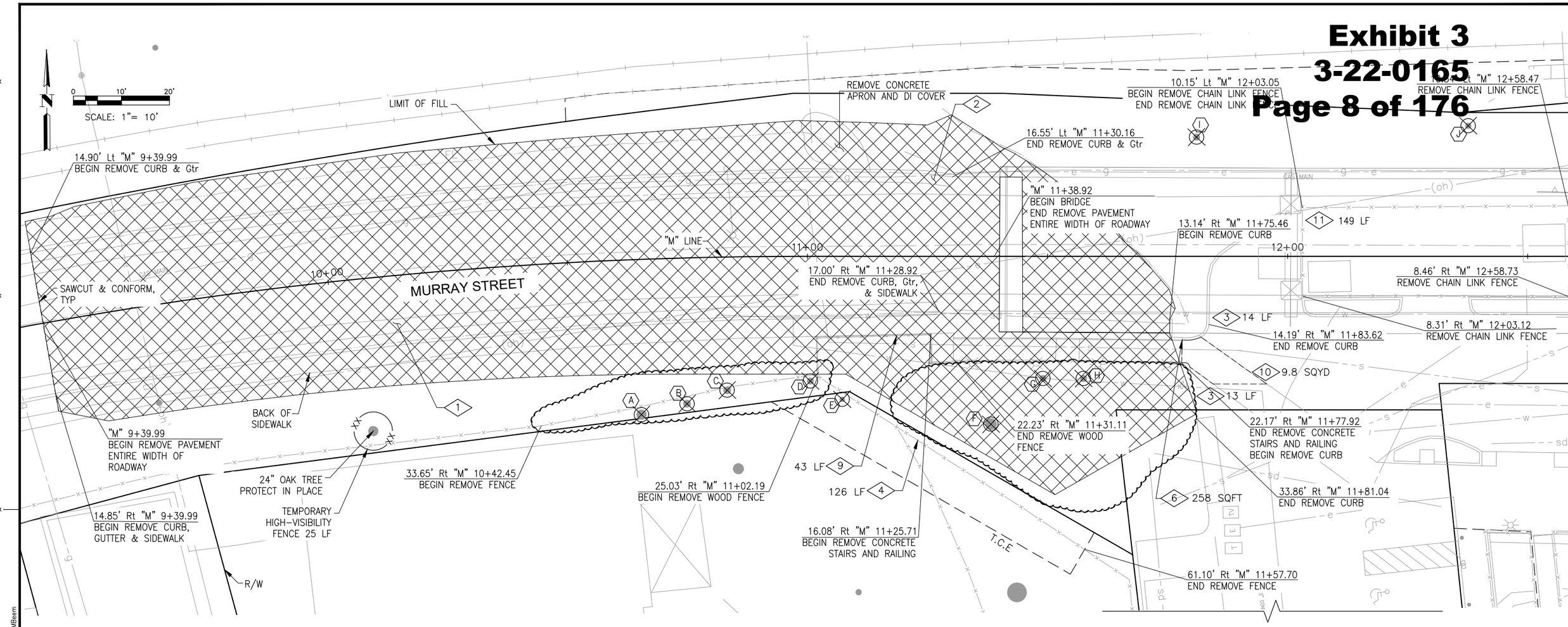

LEGEND:

- ROADWAY EXCAVATION
- SHRUBS/GROUND COVER REMOVAL
- REMOVE TREE

SYMBOL	DESCRIPTION
1	REMOVE CONCRETE CURB, GUTTER, & SIDEWALK
2	REMOVE CONCRETE CURB & GUTTER
3	REMOVE CONCRETE CURB
4	REMOVE FENCE
5	REMOVE AC DIKE
6	REMOVE CONCRETE STAIRS
7	REMOVE RETAINING WALL
8	REMOVE WOOD RETAINING WALL
9	REMOVE WOOD FENCE
10	REMOVE (CONCRETE) EXPOSED AGGREGATE
11	REMOVE CHAIN LINK FENCE
A	REMOVE TREE – SEE TABLE

NOTES:
1. FOR REMOVAL OF ELECTRICAL FACILITIES SEE ELECTRICAL PLANS
2. FOR REMOVAL OF DRAINAGE FACILITIES SEE DRAINAGE PLANS
3. FOR REMOVAL OF WATER FACILITIES SEE WATERLINE PLANS
4. SEE CONSTRUCTION DETAILS C-3 FOR LIMITS OF TEMPORARY FENCE AND FENCE REMOVAL.

TREE REMOVAL		
	SIZE	TYPE
A	30"	CANARY ISLAND PINE (HERITAGE)
B	30"	CANARY ISLAND PINE (HERITAGE)
C	18"	CANARY ISLAND PINE
D	30"	CANARY ISLAND PINE (HERITAGE)
E	12"	MONTEREY PINE (HERITAGE)
F	38"	MONTEREY PINE (HERITAGE)
G	12"	DECIDUOUS
H	12"	DECIDUOUS
I	14"	DECIDUOUS
J	2 STEMS – 14" & 16"	OAK (HERITAGE)

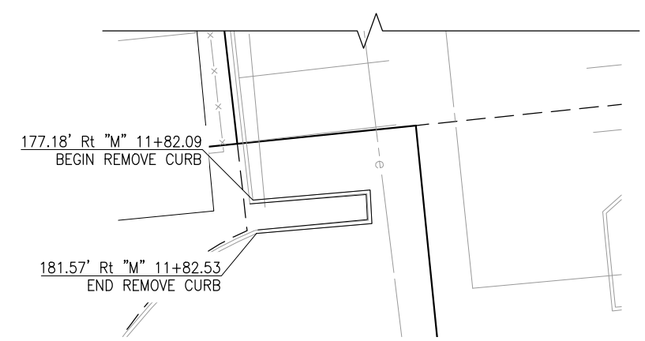

100% SUBMITTAL NOT FOR CONSTRUCTION

NOTE:
THE CONTRACTOR SHALL VERIFY ALL CONTROLLING FIELD DIMENSIONS BEFORE ORDERING OR FABRICATING ANY MATERIAL.

DEM-1

REGISTERED PROFESSIONAL ENGINEER JUSTIN L. CONKLIN No. 81159 Exp. 30-23 CIVIL STATE OF CALIFORNIA
REGISTERED ENGINEER – CIVIL
TRC Engineers or its officers or agents shall not be responsible for the accuracy or completeness of electronic copies of this plan sheet

CITY OF SANTA CRUZ
PREPARED FOR THE CITY OF SANTA CRUZ PUBLIC WORKS DEPARTMENT

	BY	CHECKED
DESIGN	A. BEDAL	J. CONKLIN
DETAILS	A. BEDAL	J. CONKLIN
QUANTITIES		

ORIGINAL SCALE IN INCHES FOR REDUCED PLANS 0 1 2 3

TRC
MARK IMBRIANI
PROJECT MANAGER

BRIDGE NO. 36C0108
CONTRACT NO.
EA NO.

MURRAY STREET BRIDGE
SEISMIC RETROFIT AND BARRIER REPLACEMEN
DEMOLITION PLAN

DISREGARD PRINTS BEARING EARLIER REVISION DATES
REVISION DATES (PRELIMINARY STAGE ONLY)

SCALE 1"=10'
SHEET 8 OF 167
VAULT NO. XXXXXXX

Drawing name: H:\1161 – Santa Cruz\Road\Sheets\008-DEM.dwg Layout Tab: DEM-1 Aug 26,2021 – 12:19pm MBeem

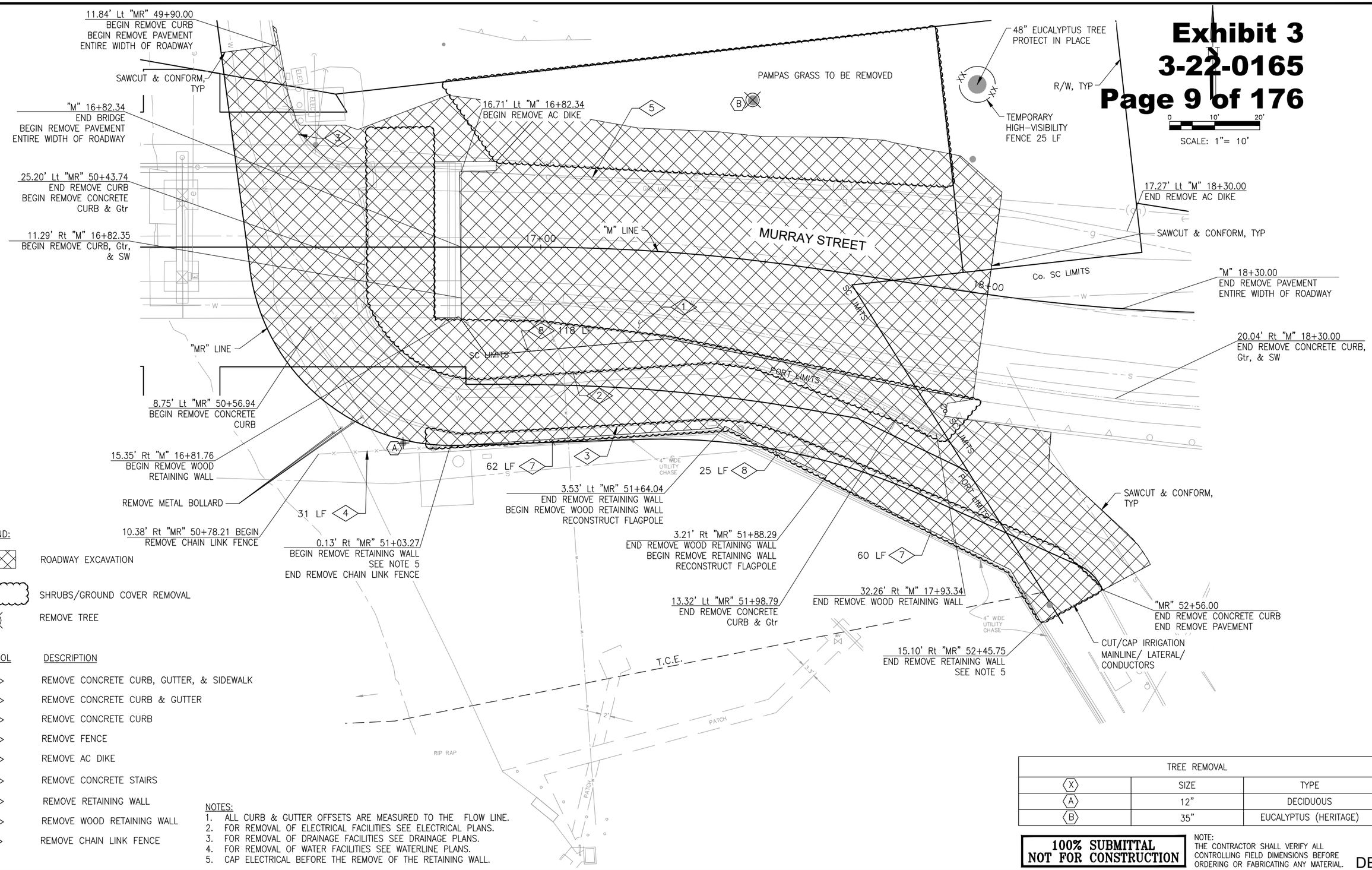

LEGEND:

- ROADWAY EXCAVATION
- SHRUBS/GROUND COVER REMOVAL
- REMOVE TREE

SYMBOL	DESCRIPTION
1	REMOVE CONCRETE CURB, GUTTER, & SIDEWALK
2	REMOVE CONCRETE CURB & GUTTER
3	REMOVE CONCRETE CURB
4	REMOVE FENCE
5	REMOVE AC DIKE
6	REMOVE CONCRETE STAIRS
7	REMOVE RETAINING WALL
8	REMOVE WOOD RETAINING WALL
9	REMOVE CHAIN LINK FENCE

NOTES:
1. ALL CURB & GUTTER OFFSETS ARE MEASURED TO THE FLOW LINE.
2. FOR REMOVAL OF ELECTRICAL FACILITIES SEE ELECTRICAL PLANS.
3. FOR REMOVAL OF DRAINAGE FACILITIES SEE DRAINAGE PLANS.
4. FOR REMOVAL OF WATER FACILITIES SEE WATERLINE PLANS.
5. CAP ELECTRICAL BEFORE THE REMOVE OF THE RETAINING WALL.

TREE REMOVAL		
X	SIZE	TYPE
A	12"	DECIDUOUS
B	35"	EUCALYPTUS (HERITAGE)

100% SUBMITTAL NOT FOR CONSTRUCTION

NOTE:
THE CONTRACTOR SHALL VERIFY ALL CONTROLLING FIELD DIMENSIONS BEFORE ORDERING OR FABRICATING ANY MATERIAL.

DEM-2

REGISTERED PROFESSIONAL ENGINEER JUSTIN L. CONKLIN No. 6-30-23 CIVIL STATE OF CALIFORNIA

REGISTERED ENGINEER – CIVIL

TRC Engineers or its officers or agents shall not be responsible for the accuracy or completeness of electronic copies of this plan sheet

CITY OF SANTA CRUZ

PREPARED FOR THE
CITY OF SANTA CRUZ
PUBLIC WORKS DEPARTMENT

	BY	CHECKED
DESIGN	A. BEDAL	J. CONKLIN
DETAILS	A. BEDAL	J. CONKLIN
QUANTITIES		

ORIGINAL SCALE IN INCHES FOR REDUCED PLANS 0 1 2 3

TRC
MARK IMBRIANI
PROJECT MANAGER

BRIDGE NO. 36C0108
CONTRACT NO.
EA NO.

MURRAY STREET BRIDGE
SEISMIC RETROFIT AND BARRIER REPLACEMEN
DEMOLITION PLAN

DISREGARD PRINTS BEARING EARLIER REVISION DATES
REVISION DATES (PRELIMINARY STAGE ONLY)

SCALE 1"=10'
SHEET 9 OF 167
VAULT NO. XXXXXXX

Drawing name: H:\1161 – Santa Cruz\Road\Sheets\008-DEM.dwg Layout Tab: DEM-2 Aug 26,2021 – 12:20pm MBeem

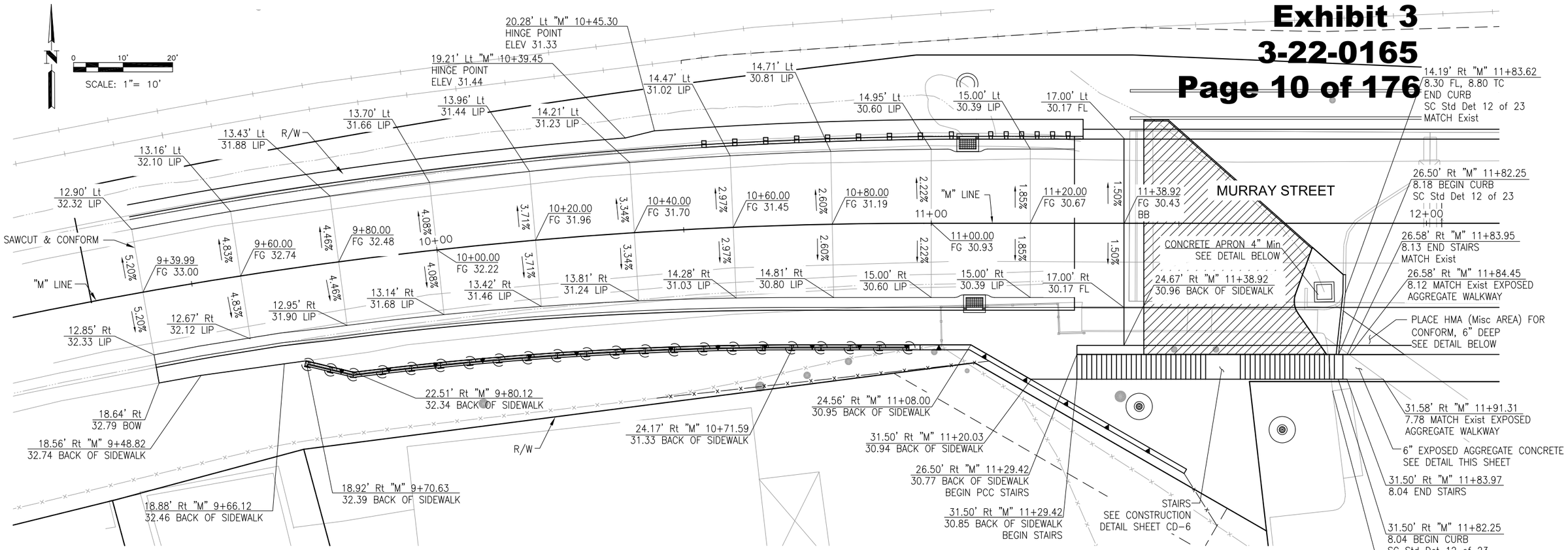

NOTES:
1. ALL CURB & GUTTER OFFSETS ARE MEASURED TO THE FLOW LINE.
2. FOR REMOVAL OF ELECTRICAL FACILITIES SEE ELECTRICAL PLANS
3. FOR REMOVAL OF DRAINAGE FACILITIES SEE DRAINAGE PLANS

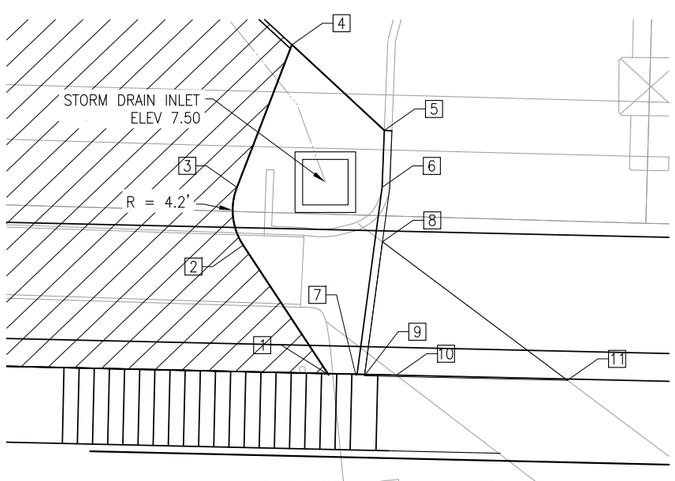

CONCRETE APRON/CONFORM

1"=5'

CONCRETE APRON		
No. #	LOCATION	ELEVATION
1	26.58' Rt "M" 11+79.88	8.87±
2	18.16' Rt "M" 11+74.04	8.75±
3	14.35' Rt "M" 11+73.54	8.75±
4	4.86' Rt "M" 11+76.95	9.15±
5	10.37' Rt "M" 11+83.18	8.83±
6	14.16' Rt "M" 11+83.12	8.80±
7	26.50' Rt "M" 11+81.75	8.63±

PLACE HMA (Misc AREA)		
No. #	LOCATION	ELEVATION
8	17.72' Rt "M" 11+83.23	8.22±
9	25.09' Rt "M" 11+82.41	8.13±
10	26.58' Rt "M" 11+84.85	8.12±
11	26.58' Rt "M" 11+95.64	7.67±

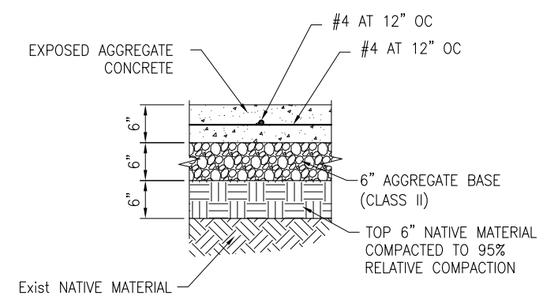

EXPOSED AGGREGATE CONCRETE

1"=1'

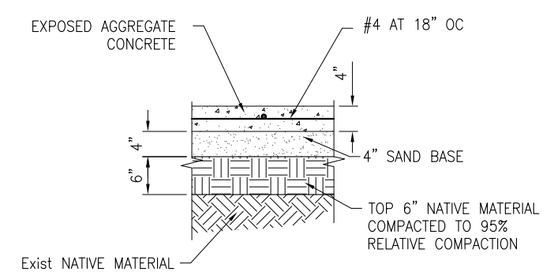

EXPOSED AGGREGATE CONCRETE (PEDESTRIAN AREAS ONLY)

1"=1'

100% SUBMITTAL NOT FOR CONSTRUCTION

NOTE:
THE CONTRACTOR SHALL VERIFY ALL CONTROLLING FIELD DIMENSIONS BEFORE ORDERING OR FABRICATING ANY MATERIAL.

C-1

REGISTERED PROFESSIONAL ENGINEER JUSTIN L. CONKLIN No. 50-23 CIVIL STATE OF CALIFORNIA

REGISTERED ENGINEER – CIVIL

TRC Engineers or its officers or agents shall not be responsible for the accuracy or completeness of electronic copies of this plan sheet

CITY OF SANTA CRUZ

PREPARED FOR THE
CITY OF SANTA CRUZ
PUBLIC WORKS DEPARTMENT

	BY	CHECKED
DESIGN	A. BEDAL	J. CONKLIN
DETAILS	A. BEDAL	J. CONKLIN
QUANTITIES		

ORIGINAL SCALE IN INCHES FOR REDUCED PLANS 0 1 2 3

TRC
MARK IMBRIANI
PROJECT MANAGER

BRIDGE NO. 36C0108
CONTRACT NO.
EA NO.

MURRAY STREET BRIDGE
SEISMIC RETROFIT AND BARRIER REPLACEMENT
CONSTRUCTION DETAILS

DISREGARD PRINTS BEARING EARLIER REVISION DATES
REVISION DATES (PRELIMINARY STAGE ONLY)

SCALE 1"=10'
SHEET 10 OF 167
VAULT NO. XXXXXXX

Drawing name: H:\1161 – Santa Cruz\Road\Sheets\010-C1 & C2.dwg Layout Tab: CD-1 West Elev Oct 11,2021 – 1:53pm ABedal

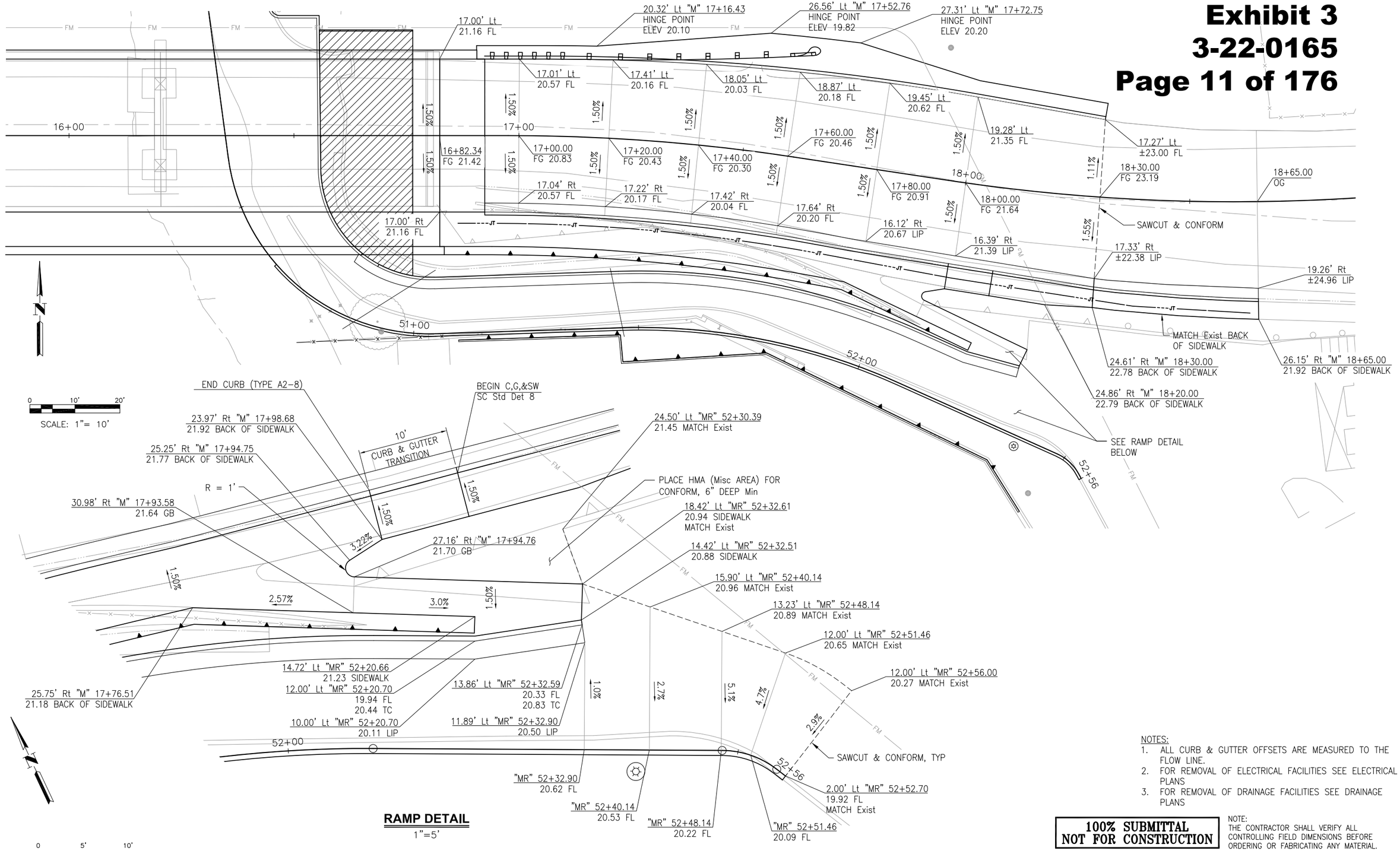

RAMP DETAIL
1"=5'

NOTES:
1. ALL CURB & GUTTER OFFSETS ARE MEASURED TO THE FLOW LINE.
2. FOR REMOVAL OF ELECTRICAL FACILITIES SEE ELECTRICAL PLANS
3. FOR REMOVAL OF DRAINAGE FACILITIES SEE DRAINAGE PLANS

100% SUBMITTAL
NOT FOR CONSTRUCTION

NOTE:
THE CONTRACTOR SHALL VERIFY ALL CONTROLLING FIELD DIMENSIONS BEFORE ORDERING OR FABRICATING ANY MATERIAL.

C-2

REGISTERED PROFESSIONAL ENGINEER
JUSTIN L. CONKLIN
No. 81109
Exp. 30-23
CIVIL
STATE OF CALIFORNIA

REGISTERED ENGINEER – CIVIL

TRC Engineers or its officers or agents shall not be responsible for the accuracy or completeness of electronic copies of this plan sheet

CITY OF SANTA CRUZ

PREPARED FOR THE
CITY OF SANTA CRUZ
PUBLIC WORKS DEPARTMENT

DESIGN	BY A. BEDAL	CHECKED J. CONKLIN
DETAILS	BY A. BEDAL	CHECKED J. CONKLIN
QUANTITIES	BY	CHECKED

ORIGINAL SCALE IN INCHES FOR REDUCED PLANS 0 1 2 3

TRC
MARK IMBRIANI
PROJECT MANAGER

BRIDGE NO. 36C0108
CONTRACT NO.
EA NO.

MURRAY STREET BRIDGE
SEISMIC RETROFIT AND BARRIER REPLACEMENT
CONSTRUCTION DETAILS

DISREGARD PRINTS BEARING EARLIER REVISION DATES
REVISION DATES (PRELIMINARY STAGE ONLY)

SCALE 1"=10'
SHEET 11 OF 167
VAULT NO. XXXXXXX

Drawing name: H:\1161 – Santa Cruz\Road\Sheets\010-C1 & C2.dwg Layout Tab: CD-2 East Elev Oct 11,2021 – 1:54pm ABedal

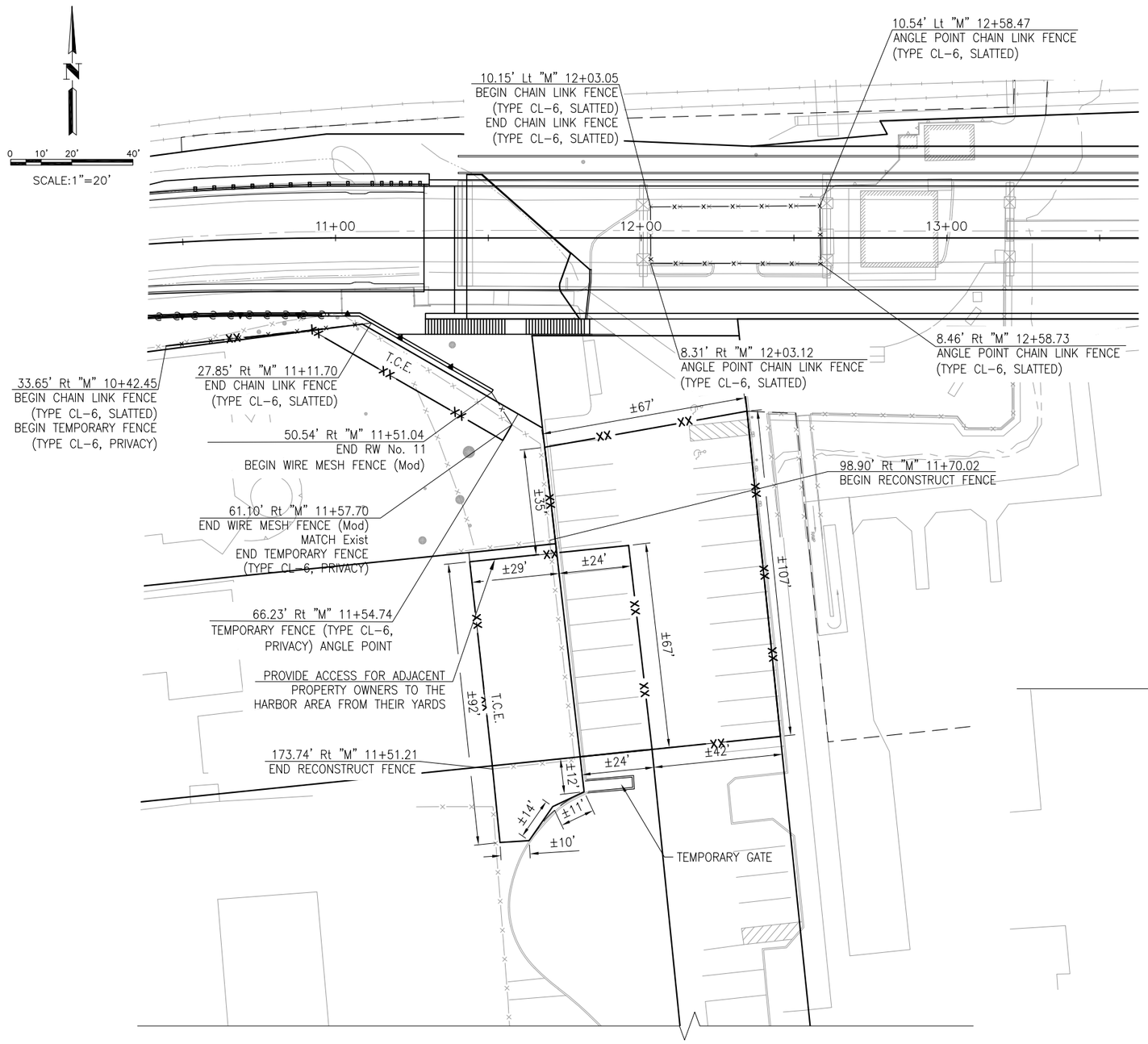

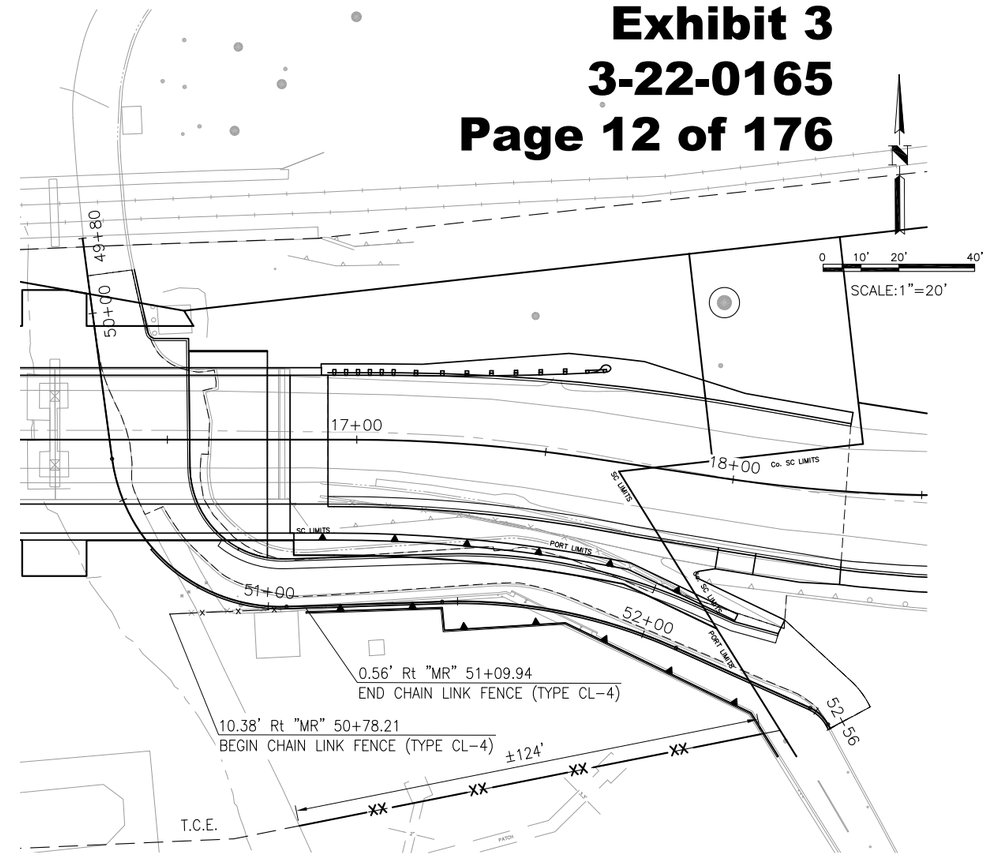

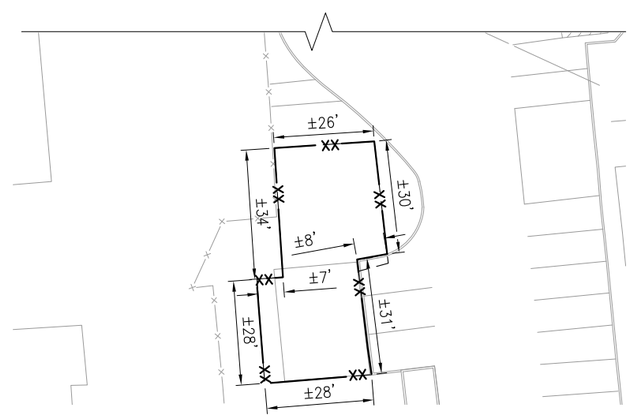

NOTES:

1. CHAIN LINKED FENCE TYPE CL-4 AND CL-6 PER CALTRANS Std PLAN A85 AND A85A.

LEGEND:

——xx—— TEMPORARY FENCE

——x——x—— FENCE/CHAIN LINK FENCE

FENCE DETAILS

100% SUBMITTAL
NOT FOR CONSTRUCTION

NOTE:
THE CONTRACTOR SHALL VERIFY ALL CONTROLLING FIELD DIMENSIONS BEFORE ORDERING OR FABRICATING ANY MATERIAL.

C-3

REGISTERED PROFESSIONAL ENGINEER JUSTIN L. CONKLIN No. 51109 CIVIL STATE OF CALIFORNIA
REGISTERED ENGINEER – CIVIL
TRC Engineers or its officers or agents shall not be responsible for the accuracy or completeness of electronic copies of this plan sheet

CITY OF SANTA CRUZ

PREPARED FOR THE
CITY OF SANTA CRUZ
PUBLIC WORKS DEPARTMENT

DESIGN	BY A. BEDAL	CHECKED J. CONKLIN	
DETAILS	BY A. BEDAL	CHECKED J. CONKLIN	
QUANTITIES	BY	CHECKED	
ORIGINAL SCALE IN INCHES FOR REDUCED PLANS	0 1 2 3		

TRC
MARK IMBRIANI
PROJECT MANAGER

BRIDGE NO. 36C0108
CONTRACT NO.
EA NO.

MURRAY STREET BRIDGE
SEISMIC RETROFIT AND BARRIER REPLACEMENT
CONSTRUCTION DETAILS - FENCE DETAILS

DISREGARD PRINTS BEARING EARLIER REVISION DATES
REVISION DATES (PRELIMINARY STAGE ONLY)

SCALE 1"=10'
SHEET 12 OF 167
VAULT NO. XXXXXXX

Drawing name: H:\1161 – Santa Cruz\Road\Sheets\010-C3.dwg Layout Tab: CD-3 Fence Details Oct 11,2021 – 1:37pm ABedal

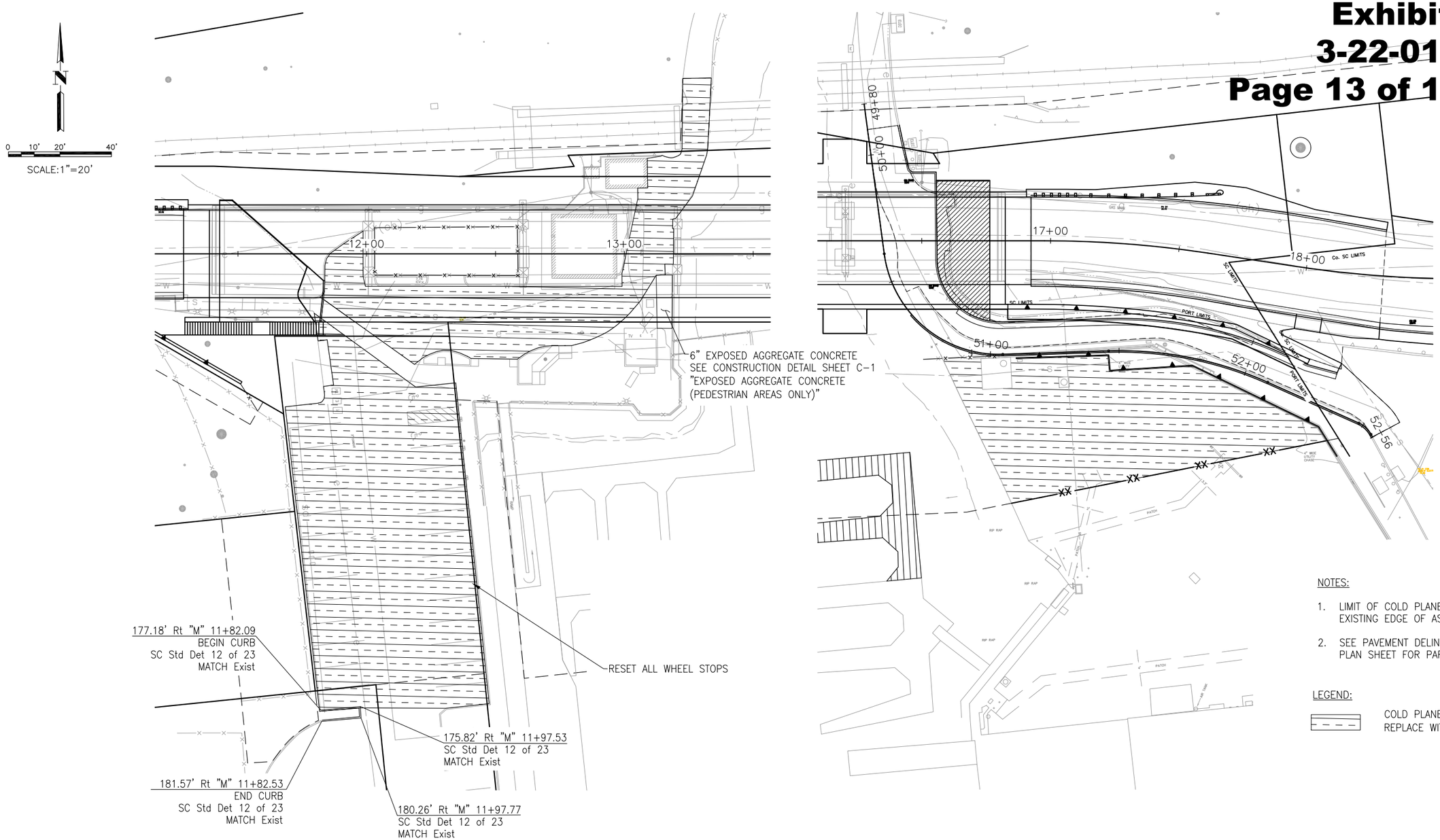

NOTES:

1. LIMIT OF COLD PLANE IS DEFINED BY EXISTING EDGE OF ASPHALT PAVEMENT.
2. SEE PAVEMENT DELINEATION AND SIGN PLAN SHEET FOR PARKING LOT STRIPING.

LEGEND:

COLD PLANE ASPHALT CONCRETE PAVEMENT REPLACE WITH 2" HMA (TYPE A)

100% SUBMITTAL
NOT FOR CONSTRUCTION

NOTE:
THE CONTRACTOR SHALL VERIFY ALL CONTROLLING FIELD DIMENSIONS BEFORE ORDERING OR FABRICATING ANY MATERIAL.

C-4

REGISTERED PROFESSIONAL ENGINEER
JUSTIN L. CONKLIN
No. 5[illegible]
CIVIL
STATE OF CALIFORNIA

REGISTERED ENGINEER – CIVIL

TRC Engineers or its officers or agents shall not be responsible for the accuracy or completeness of electronic copies of this plan sheet

CITY OF SANTA CRUZ

PREPARED FOR THE
CITY OF SANTA CRUZ
PUBLIC WORKS DEPARTMENT

DESIGN	BY A. BEDAL	CHECKED J. CONKLIN
DETAILS	BY A. BEDAL	CHECKED J. CONKLIN
QUANTITIES	BY	CHECKED

ORIGINAL SCALE IN INCHES FOR REDUCED PLANS 0 1 2 3

TRC
MARK IMBRIANI
PROJECT MANAGER

BRIDGE NO. 36C0108
CONTRACT NO.
EA NO.

MURRAY STREET BRIDGE
SEISMIC RETROFIT AND BARRIER REPLACEMENT
CONSTRUCTION DETAILS

DISREGARD PRINTS BEARING EARLIER REVISION DATES
REVISION DATES (PRELIMINARY STAGE ONLY)

SCALE 1"=10'
SHEET 13 OF 167
VAULT NO. XXXXXXX

Drawing name: H:\1161 – Santa Cruz\Road\Sheets\010-C4.dwg Layout Tab: CD-4 West Plaza Oct 11,2021 – 1:39pm ABedal

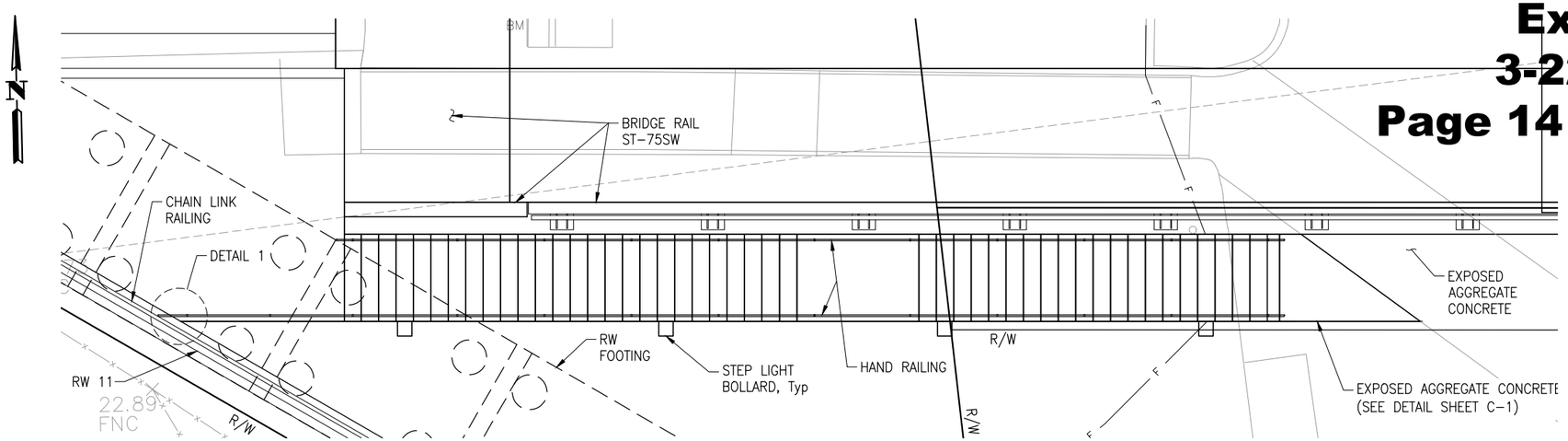

PLAN
1/4"=1'-0"

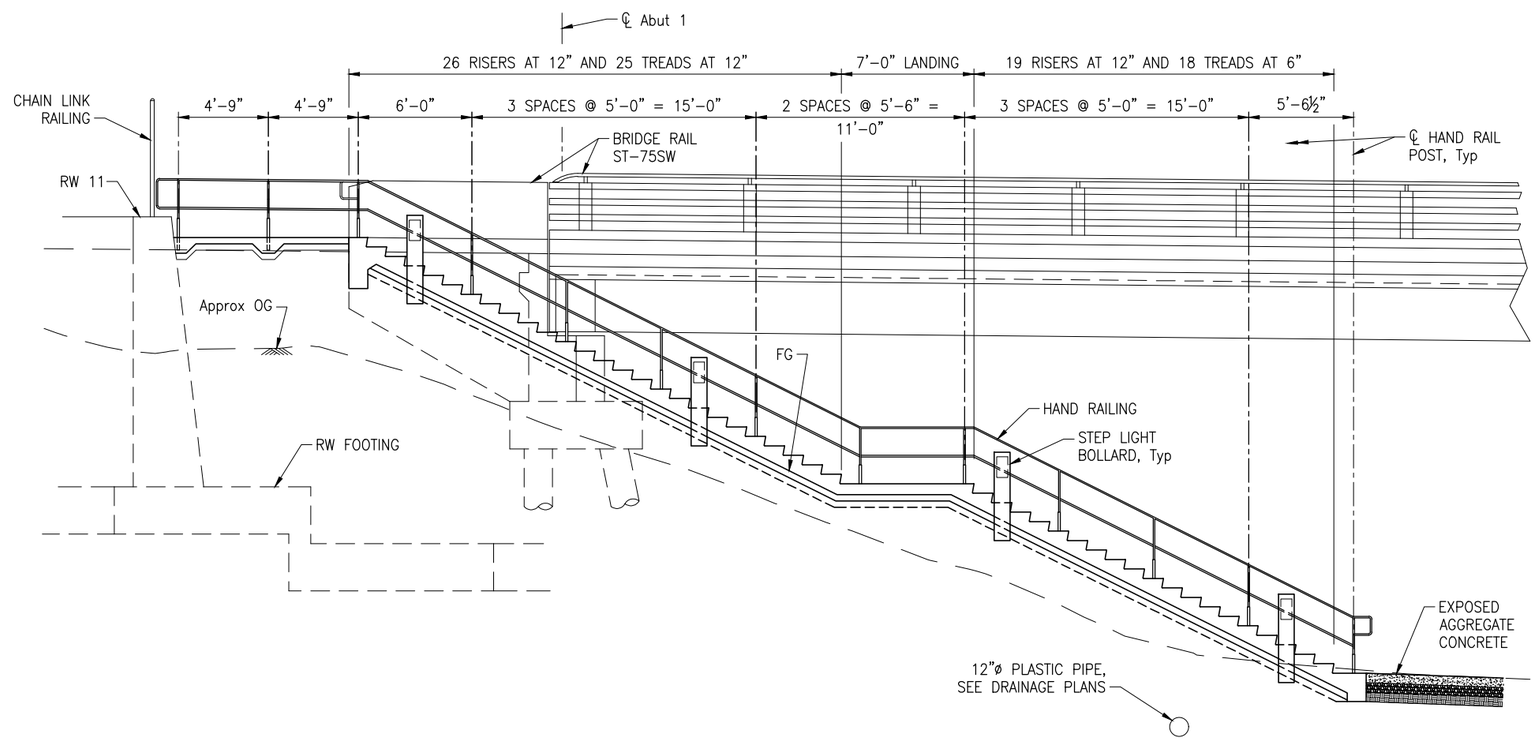

ELEVATION
1/4"=1'-0"

NOTES:
1. WET SET NON-SLIP DETECTABLE WARNING INTO STEP.

NOTE: THE CONTRACTOR SHALL VERIFY ALL CONTROLLING FIELD DIMENSIONS BEFORE ORDERING OR FABRICATING ANY MATERIAL.

100% SUBMITTAL
NOT FOR CONSTRUCTION

C-5

REGISTERED PROFESSIONAL ENGINEER JUSTIN L. CONKLIN No. 81300 Exp. 30-23 CIVIL STATE OF CALIFORNIA

REGISTERED ENGINEER – CIVIL

TRC Engineers or its officers or agents shall not be responsible for the accuracy or completeness of electronic copies of this plan sheet

CITY OF SANTA CRUZ

PREPARED FOR THE
CITY OF SANTA CRUZ
PUBLIC WORKS DEPARTMENT

DESIGN	BY A. BEDAL	CHECKED C. PINKERTON	
DETAILS	BY A. BEDAL	CHECKED C. PINKERTON	
QUANTITIES	BY	CHECKED	
ORIGINAL SCALE IN INCHES FOR REDUCED PLANS	0 1 2 3		

TRC
MARK IMBRIANI
PROJECT MANAGER

BRIDGE NO. 36C0108
CONTRACT NO.
EA NO.

MURRAY STREET BRIDGE
SEISMIC RETROFIT AND BARRIER REPLACEMEN
CONSTRUCTION DETAILS

DISREGARD PRINTS BEARING EARLIER REVISION DATES → 09-09-21

REVISION DATES (PRELIMINARY STAGE ONLY)

SCALE AS SHOWN
SHEET 13 OF 167
VAULT NO. XXXXXXX

Drawing name: H:\1161 - Santa Cruz\Road\Sheets\010-C5.dwg Layout Tab: CD-5 STAIRS Oct 11,2021 - 1:42pm ABedal

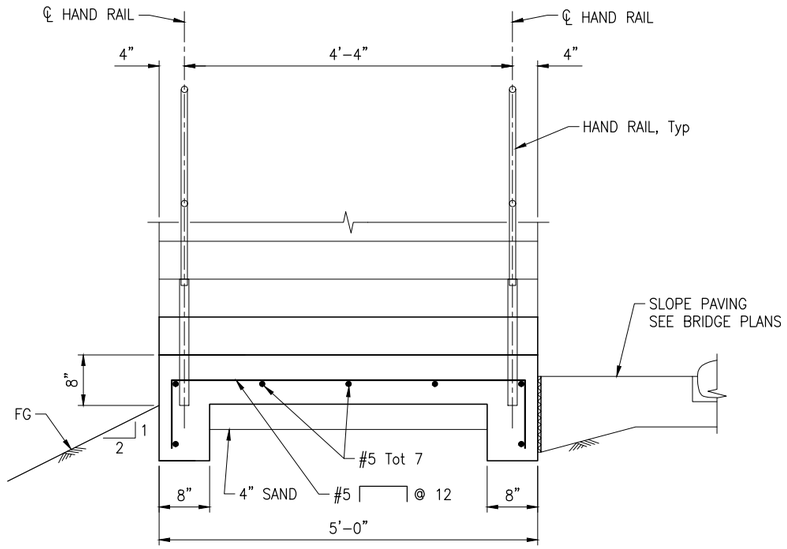

TYPICAL SECTION
1"=1'-0"

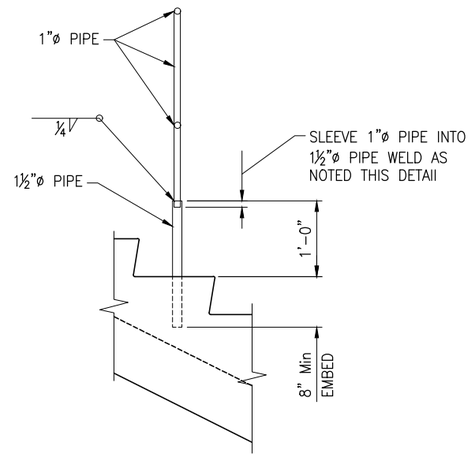

HAND RAIL POST DETAIL
1"=1'-0"

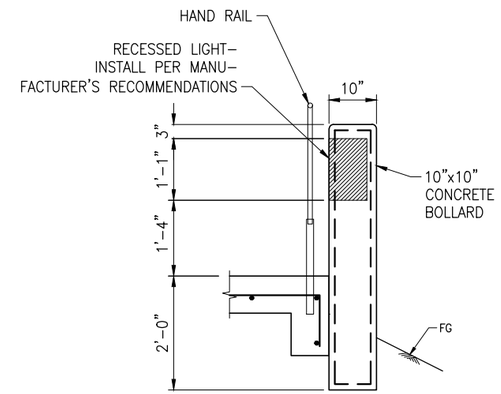

STEP LIGHT BOLLARD
3/4"=1'-0"

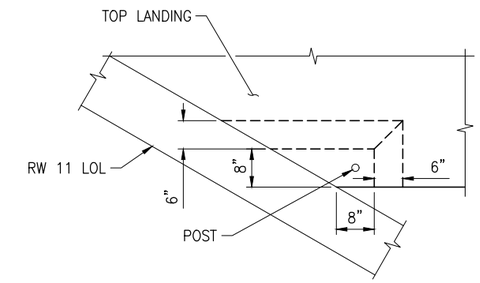

DETAIL 1
3/4"=1'-0"

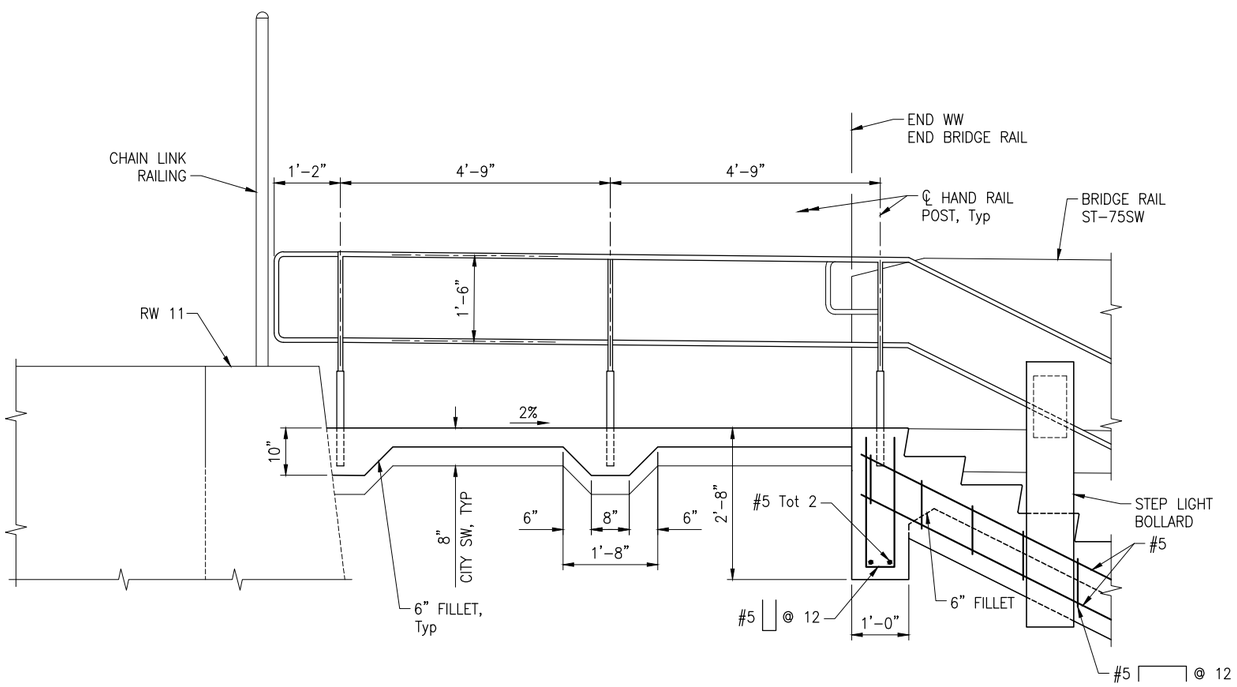

TOP LANDING DETAIL
3/4"=1'-0"

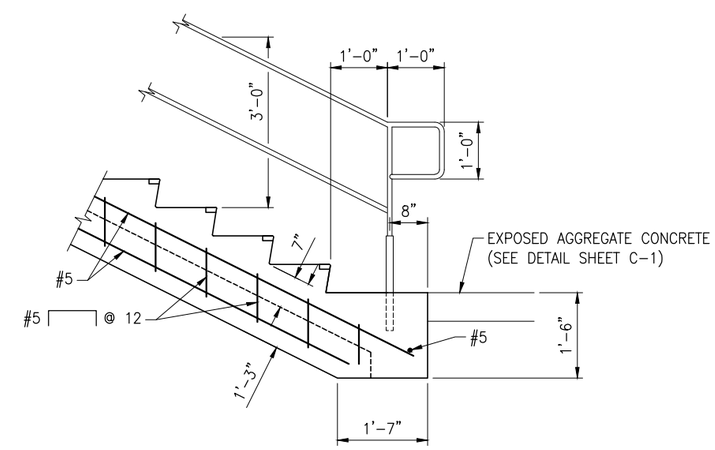

BOTTOM LANDING DETAIL
3/4"=1'-0"

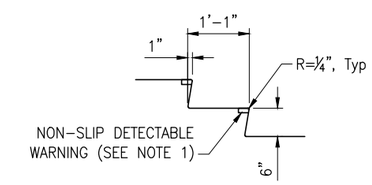

TYPICAL TREAD
3/4"=1'-0"

NOTE:

1. WET SET NON-SLIP DETECTABLE WARNING INTO STEP.

100% SUBMITTAL
NOT FOR CONSTRUCTION

NOTE:
THE CONTRACTOR SHALL VERIFY ALL CONTROLLING FIELD DIMENSIONS BEFORE ORDERING OR FABRICATING ANY MATERIAL.

C-6

REGISTERED PROFESSIONAL ENGINEER — JUSTIN L. CONKLIN — No. [illegible] — 30-23 — CIVIL — STATE OF CALIFORNIA — REGISTERED ENGINEER – CIVIL

TRC Engineers or its officers or agents shall not be responsible for the accuracy or completeness of electronic copies of this plan sheet

CITY OF SANTA CRUZ

PREPARED FOR THE
CITY OF SANTA CRUZ
PUBLIC WORKS DEPARTMENT

	BY	CHECKED
DESIGN	A. BEDAL	C. PINKERTON
DETAILS	A. BEDAL	C. PINKERTON
QUANTITIES		

ORIGINAL SCALE IN INCHES FOR REDUCED PLANS 0 1 2 3

TRC
MARK IMBRIANI
PROJECT MANAGER

BRIDGE NO. 36C0108
CONTRACT NO.
EA NO.

MURRAY STREET BRIDGE
SEISMIC RETROFIT AND BARRIER REPLACEMEN
CONSTRUCTION DETAILS

DISREGARD PRINTS BEARING EARLIER REVISION DATES
REVISION DATES (PRELIMINARY STAGE ONLY) 09-09-21

SCALE AS SHOWN
SHEET 14 OF 167
VAULT NO. XXXXXXX

Drawing name: H:\1161 – Santa Cruz\Road\Sheets\010-C5.dwg Layout Tab: CD-6 STAIRS Oct 11,2021 – 1:42pm ABedal

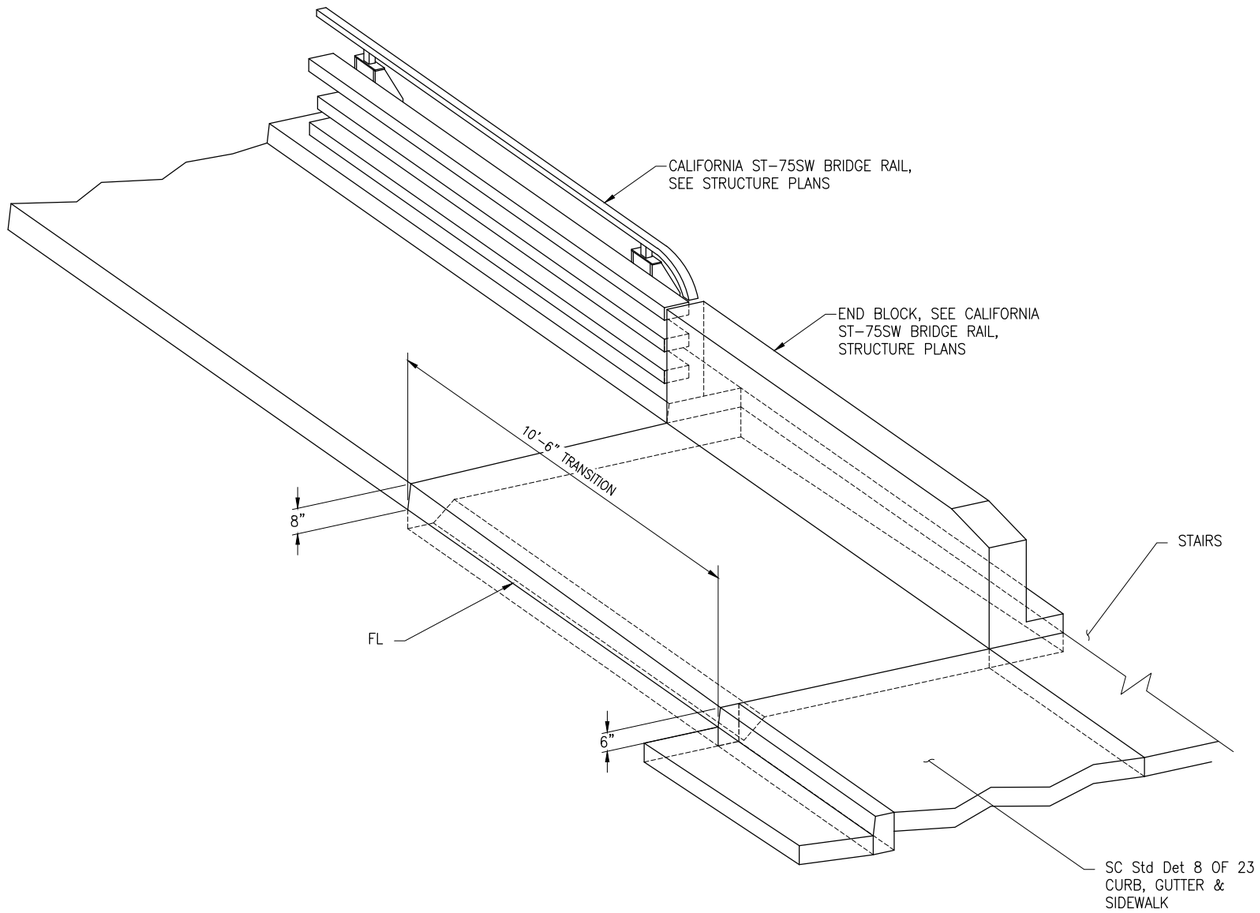

SIDEWALK TRANSITION
1/2"=1'

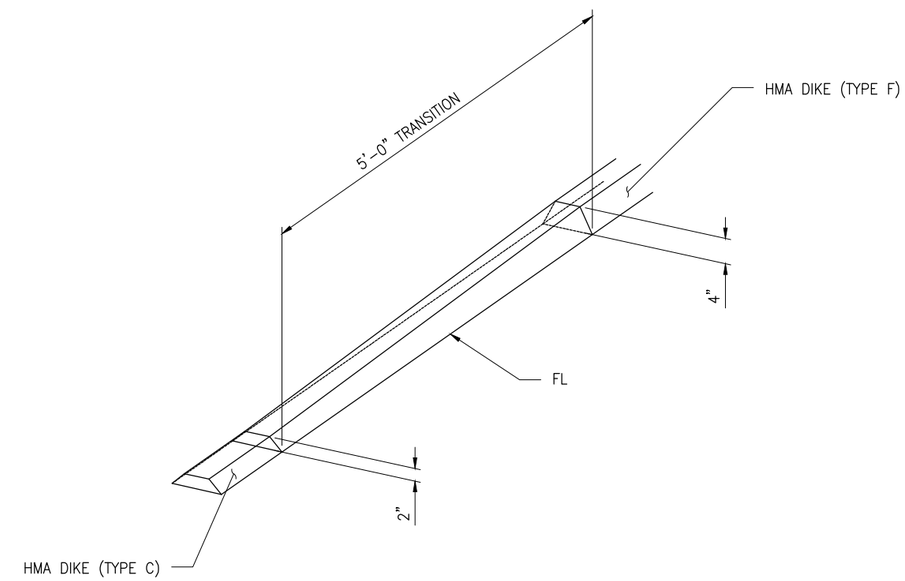

HMA DIKE TRANSITION
1"=1'

100% SUBMITTAL
NOT FOR CONSTRUCTION

NOTE:
THE CONTRACTOR SHALL VERIFY ALL CONTROLLING FIELD DIMENSIONS BEFORE ORDERING OR FABRICATING ANY MATERIAL.

C-7

REGISTERED PROFESSIONAL ENGINEER JUSTIN L. CONKLIN No. 50-23 CIVIL STATE OF CALIFORNIA
REGISTERED ENGINEER – CIVIL
TRC Engineers or its officers or agents shall not be responsible for the accuracy or completeness of electronic copies of this plan sheet

CITY OF SANTA CRUZ

PREPARED FOR THE
CITY OF SANTA CRUZ
PUBLIC WORKS DEPARTMENT

DESIGN	BY A. BEDAL	CHECKED J. CONKLIN	
DETAILS	BY A. BEDAL	CHECKED J. CONKLIN	
QUANTITIES	BY	CHECKED	
ORIGINAL SCALE IN INCHES FOR REDUCED PLANS	0 1 2 3		

TRC
MARK IMBRIANI
PROJECT MANAGER

BRIDGE NO. 36C0108
CONTRACT NO.
EA NO.

MURRAY STREET BRIDGE
SEISMIC RETROFIT AND BARRIER REPLACEMEN
CONSTRUCTION DETAILS

DISREGARD PRINTS BEARING EARLIER REVISION DATES
REVISION DATES (PRELIMINARY STAGE ONLY)

SCALE AS SHOWN
SHEET 15 OF 167
VAULT NO. XXXXXXX

Drawing name: H:\1161 – Santa Cruz\Road\Sheets\010-C6.dwg Layout Tab: CD-7 Transition Details Oct 11,2021 – 1:43pm ABedal

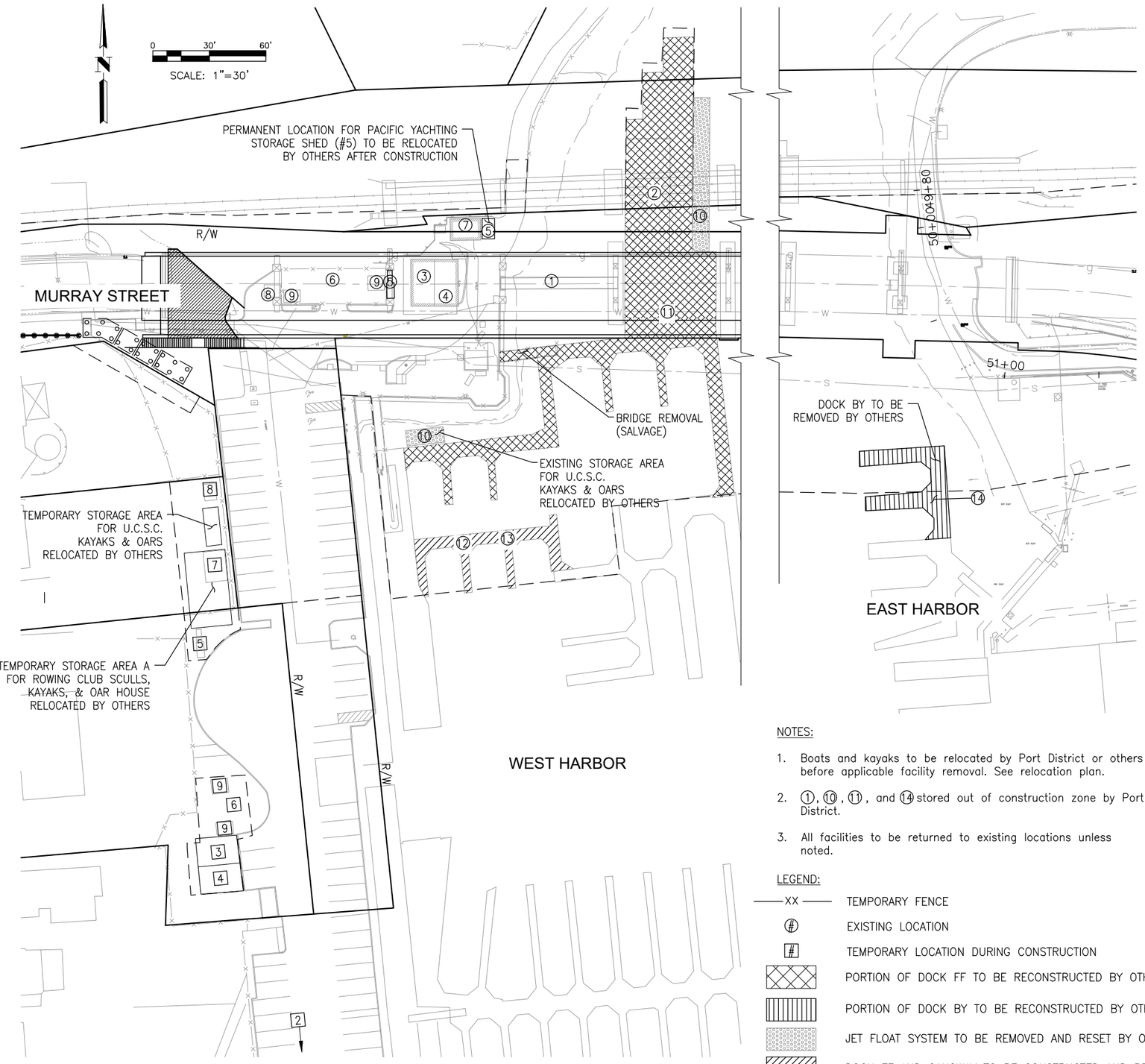

PORT RELOCATION TABLE

ITEM	DESCRIPTION (OWNER)	ACTION	PAYMENT	WORK TYPE
1	PEDESTRIAN BRIDGE (PORT DISTRICT)	EXISTING PED BRIDGE TO BE REMOVED PERMANENTLY BETWEEN BENT 4&5. SHOWN ON CONTRACT BRIDGE PLANS AS BRIDGE REMOVAL (PORTION)	OTHERS	CONSTRUCTION
2	TEMPORARY AND PERMANENT ROWING RACKS – KAYAK/ROWING STORAGE UNITS (PORT DISTRICT)	4680 SQFT+ROOF RELOCATE 60 BOATS TO TEMPORARY STORAGE LOCATIONS A, B, AND C CONSTRUCT TEMPORARY STORAGE RACKS AT LOCATION A, B, AND C.	OTHERS	RIGHT OF WAY
3	CHARDONNAY (PORT DISTRICT)	PROVIDE TEMPORARY BUILDING INCLUDING UTILITY CONNECTIONS AND PROTECT EXISTING BUILDING IN PLACE	CONTRACTOR	CONSTRUCTION
4	PACIFIC YACHTING (PORT DISTRICT)	PROVIDE TEMPORARY BUILDING INCLUDING UTILITY CONNECTIONS AND PROTECT EXISTING BUILDING IN PLACE	CONTRACTOR	CONSTRUCTION
5	PACIFIC YACHTING STORAGE SHED BENEATH SPAN 3 (PORT DISTRICT)	PURCHASE MATERIALS FOR A TEMPORARY SHED 8'X4'X8', CONSTRUCT IT AT TEMORARY LOCATION AND RELOCATE TO A NEW LOCATION ADJACENT TO THE SC ROWING CLUB OAR HOUSE AFTER CONSTRUCTION	CONTRACTOR	CONSTRUCTION
6	UCSC STORAGE SPACE BENEATH SPAN 2 (PORT DISTRICT)	ON BID ITEM LIST THIS WILL BE TWO ITEMS (REMOVE FENCE) AND CHAIN LINK FENCE (WITH WOOD SLATES– 6' HIGH) REMOVE FENCING FOR TEMPORARY STORAGE AREA (FENCED YARD) AND RECONSTRUCT AFTER CONSTRUCTION	CONTRACTOR	CONSTRUCTION
7	SANTA CRUZ ROWING CLUB OAR HOUSE (PORT DISTRICT)	PURCHASE MATERIALS FOR A TEMPORARY SHED 8'X12', CONSTRUCT IT AT TEMPORARY LOCATION AND RELOCATE TO ORIGINAL LOCATION UNDER THE BRIDGE	CONTRACTOR	CONSTRUCTION
8	WASTE OIL SHED (PORT DISTRICT)	PURCHASE MATERIALS FOR A TEMPORARY SHED 3'X6'X6', CONSTRUCT IT AT TEMPORARY LOCATION AND RELOCATE TO ORIGINAL LOCATION UNDER THE BRIDGE	CONTRACTOR	CONSTRUCTION
9	UCSC STORAGE SHEDS BUILDINGS/SHOP BENEATH SPANS 2 & 3 (PORT DISTRICT)	PURCHASE MATERIALS FOR TWO TEMPORARY SHED 8'X12', CONSTRUCT IT AT TEMPORARY LOCATION AND RELOCATE TO ORIGINAL LOCATION UNDER THE BRIDGE	CONTRACTOR	CONSTRUCTION
10	JET FLOAT/REMOVE/STORAGE/ REPLACE (PORT DISTRICT)	REMOVE JET FLOAT OUT OF CONSTRUCTION ZONE, STORE IT, AND RECONSTRUCT IT AFTER CONSTRUCTION PLACE TEMPORARY JETFLOAT AT DOCK C SLIP 23 SLIP C23 LOSS OF USE $537.60/MO. X 30 MONTHS DOLLIES (3)	OTHERS	RIGHT OF WAY
11	DOCK FF AND PEDESTRIAN ENCLOSURE (PORT DISTRICT)	REMOVE PORTION OF DOCK F–F, INCLUDING BRIDGE REMOVAL OF ADJOINING PEDESTRIAN WALKWAY RELOCATE 20 BOATS TO VISITOR DOCKS AND BACK TO DOCK FF USE OF VISITOR DOCKS TO RELOCATE 20 BOATS PILE REPLACEMENT RECONSTRUCT DOCK F–F. PERMANENT ELECTRICAL SERVICE FOR DOCKS FF &BY	OTHERS	RIGHT OF WAY
12	DOCK FF GANGWAY CONSTRUCTION (1000 SF) (PORT DISTRICT)	CONSTRUCT TEMPORARY NEW WEST HARBOR GUEST DOCK.	OTHERS	RIGHT OF WAY
13	DOCK FF GANGWAY DEMOLITION (1000 SF) (PORT DISTRICT)	DEMOLITION OF DOCK, AFTER BRIDGE CONSTRUCTION IS COMPLETE	OTHERS	RIGHT OF WAY
14	RECONSTRUCT DOCK BY (PORT DISTRICT)	REMOVE TWO NORTHERN MOST SLIPS FROM DOCK BY, RECONSTRUCT THEM AFTER BRIDGE CONSTRUCTION IS COMPLETE	OTHERS	RIGHT OF WAY

NOTES:

1. Boats and kayaks to be relocated by Port District or others before applicable facility removal. See relocation plan.
2. (1), (10), (11), and (14) stored out of construction zone by Port District.
3. All facilities to be returned to existing locations unless noted.

LEGEND:

- —XX— TEMPORARY FENCE
- (#) EXISTING LOCATION
- [#] TEMPORARY LOCATION DURING CONSTRUCTION
- PORTION OF DOCK FF TO BE RECONSTRUCTED BY OTHERS
- PORTION OF DOCK BY TO BE RECONSTRUCTED BY OTHERS
- JET FLOAT SYSTEM TO BE REMOVED AND RESET BY OTHERS
- DOCK FF AND GANGWAY TO BE CONSTRUCTED AND REMOVED BY OTHERS

100% SUBMITTAL NOT FOR CONSTRUCTION

NOTE:
THE CONTRACTOR SHALL VERIFY ALL CONTROLLING FIELD DIMENSIONS BEFORE ORDERING OR FABRICATING ANY MATERIAL.

C-8

REGISTERED PROFESSIONAL ENGINEER JUSTIN L. CONKLIN No. 50-23 CIVIL STATE OF CALIFORNIA

REGISTERED ENGINEER – CIVIL

TRC Engineers or its officers or agents shall not be responsible for the accuracy or completeness of electronic copies of this plan sheet

CITY OF SANTA CRUZ

PREPARED FOR THE
CITY OF SANTA CRUZ
PUBLIC WORKS DEPARTMENT

DESIGN	BY A. BEDAL	CHECKED J. CONKLIN	
DETAILS	BY A. BEDAL	CHECKED J. CONKLIN	
QUANTITIES	BY	CHECKED	

ORIGINAL SCALE IN INCHES FOR REDUCED PLANS 0 1 2 3

TRC
MARK IMBRIANI
PROJECT MANAGER

BRIDGE NO. 36C0108
CONTRACT NO.
EA NO.

MURRAY STREET BRIDGE
SEISMIC RETROFIT AND BARRIER REPLACEMEN
CONSTRUCTION DETAILS - PORT FACILITIES

DISREGARD PRINTS BEARING EARLIER REVISION DATES
REVISION DATES (PRELIMINARY STAGE ONLY) 7/24/15 3/9/21 3/29/21 4/09/21

SCALE 1"=10'
SHEET 16 OF 167
VAULT NO. XXXXXXX

Drawing name: H:\1161 – Santa Cruz\Road\Sheets\010-C8.dwg Layout Tab: CD-8 Port Facilities Oct 11,2021 – 1:51pm ABedal

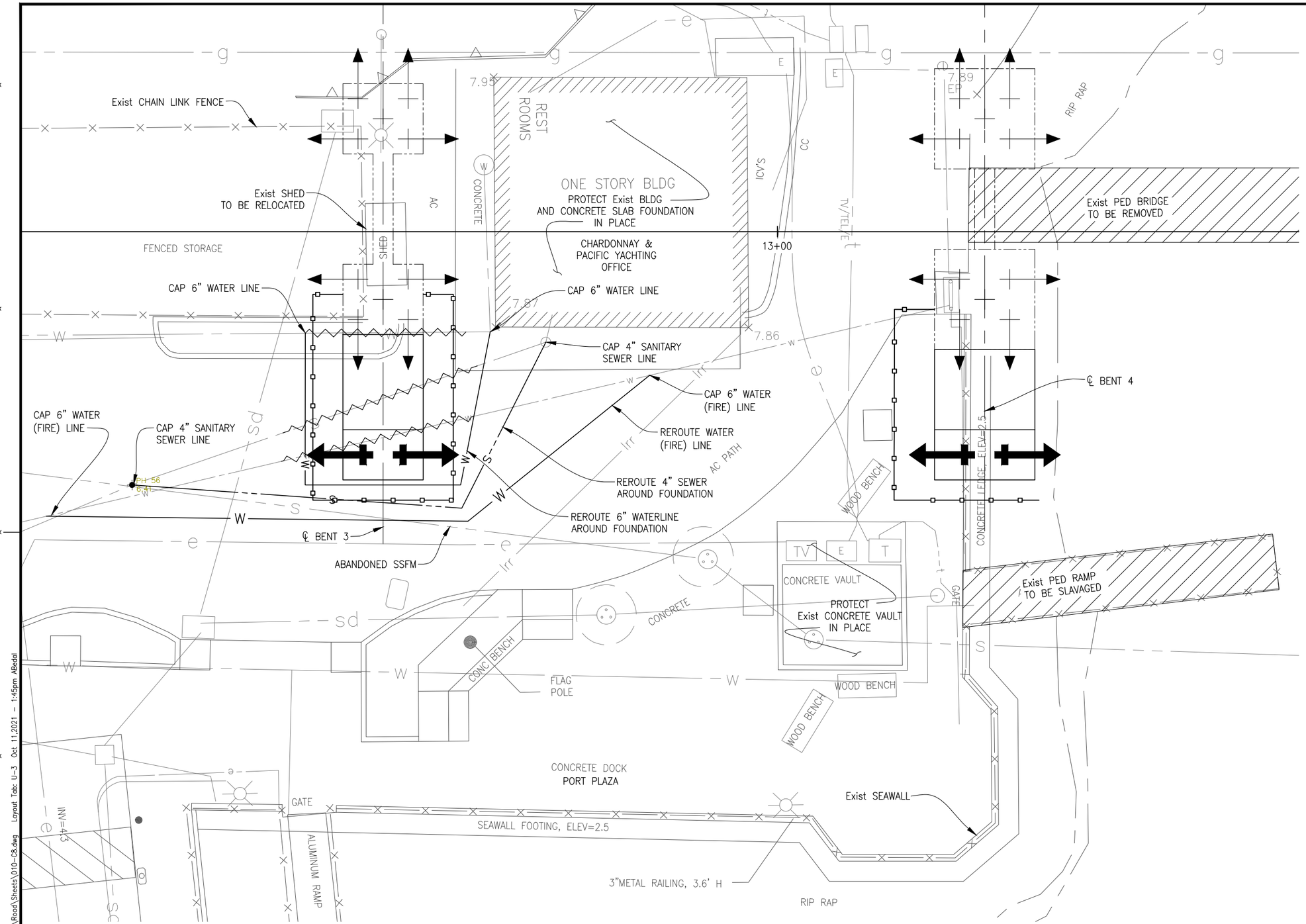

PLAN
1"=5'

LEGEND:

- Exist BATTERED PILE
- NEW BATTERED PILE
- Exist STRUCTURE
- NEW STRUCTURE
- PROPOSED SHORING
- BRIDGE/RAMP REMOVAL
- UTILITY REMOVAL

UTILITY NOTES:

1. CONTRACTOR TO RE-ROUTE WATER (FIRE) LINE BEFORE CONSTRUCTION OF BENT 3.
2. CONTRACTOR TO CAP AND ABANDON SEWER AND WATERLINE THAT FEEDS THE BUILDING DURING CONSTRUCTION AND RE-ROUTE THE SEWER AND WATER AROUND THE NEW FOUNDATION WHEN CONSTRUCTION IS COMPLETE, TO RESTORE UTILITIES TO BUILDING.
3. ELEVATIONS OF SEWER AND WATER TO BUILDING ARE NOT KNOWN, FIELD VERIFY.

NOTES:

1. BASED ON TEST BORINGS, UNDERLYING FILL MATERIALS IN PORT PLAZA APPEAR TO BE CAPABLE OF NO MORE THAN LIGHT STRUCTURE/FILL LOADINGS.
2. LOCATION OF UTILITY FACILITIES SHOWN ON THE PLANS ARE APPROXIMATE AND SHALL BE VERIFIED BY THE CONTRACTOR PRIOR TO CONSTRUCTION.
3. UTILITY OWNERSHIP ON THIS PROJECT:

   AT&T – AMERICAN TELEPHONE & TELEGRAPH (TELEPHONE)
   Co. SC – COUNTY OF SANTA CRUZ
   SC SD – CITY OF SANTA CRUZ (STORM DRAIN)
   SC SEWER – CITY OF SANTA CRUZ (SEWER)
   SC WATER – CITY OF SANTA CRUZ (WATER)
   PG&E – PACIFIC GAS & ELECTRIC (GAS & ELECTRIC)
   PAC BELL – PACIFIC BELL (TELEPHONE)
   COMCAST – (CABLE)
   PORT – SANTA CRUZ PORT DISTRICT

4. SHORING SHOWN IS CONCEPTUAL AND IS INTENDED TO PROTECT EXISTING FACILITIES, INCLUDING THE CHARDONNAY & PACIFIC YACHTING BUILDINGS ADJACENT TO BENTS AND THE CONCRETE WAULTS ADJACENT TO BENT 4. ACTUAL MEANS OF EXCAVATION AND ALL RELATED DESIGN IS THE RESPONSIBILITY OF THE CONTRACTOR. ALL DAMAGED FACILITIES MUST BE RESTORED TO THEIR ORIGINAL CONDITION.

100% SUBMITTAL
NOT FOR CONSTRUCTION

NOTE:
THE CONTRACTOR SHALL VERIFY ALL CONTROLLING FIELD DIMENSIONS BEFORE ORDERING OR FABRICATING ANY MATERIAL.

C-9

Drawing name: H:\1161 – Santa Cruz\Road\Sheets\010-C8.dwg Layout Tab: U-3 Oct 11,2021 – 1:45pm ABedal

REGISTERED PROFESSIONAL ENGINEER
JUSTIN L. CONKLIN
No. 81069
Exp. 12-30-23
CIVIL
STATE OF CALIFORNIA
REGISTERED ENGINEER – CIVIL
TRC Engineers or its officers or agents shall not be responsible for the accuracy or completeness of electronic copies of this plan sheet

CITY OF SANTA CRUZ

PREPARED FOR THE
CITY OF SANTA CRUZ
PUBLIC WORKS DEPARTMENT

DESIGN	BY	CHECKED
DETAILS	BY	CHECKED
QUANTITIES	BY	CHECKED

ORIGINAL SCALE IN INCHES FOR REDUCED PLANS 0 1 2 3

TRC
MARK IMBRIANI
PROJECT MANAGER

BRIDGE NO. 36C0108
CONTRACT NO.
EA NO.

MURRAY STREET BRIDGE
SEISMIC RETROFIT AND BARRIER REPLACEMEN
WEST HARBOR CONCEPTUAL SHORING

DISREGARD PRINTS BEARING EARLIER REVISION DATES
REVISION DATES (PRELIMINARY STAGE ONLY) 09-17-21

SCALE AS SHOWN
SHEET 17 OF 167
VAULT NO. XXXXXXX

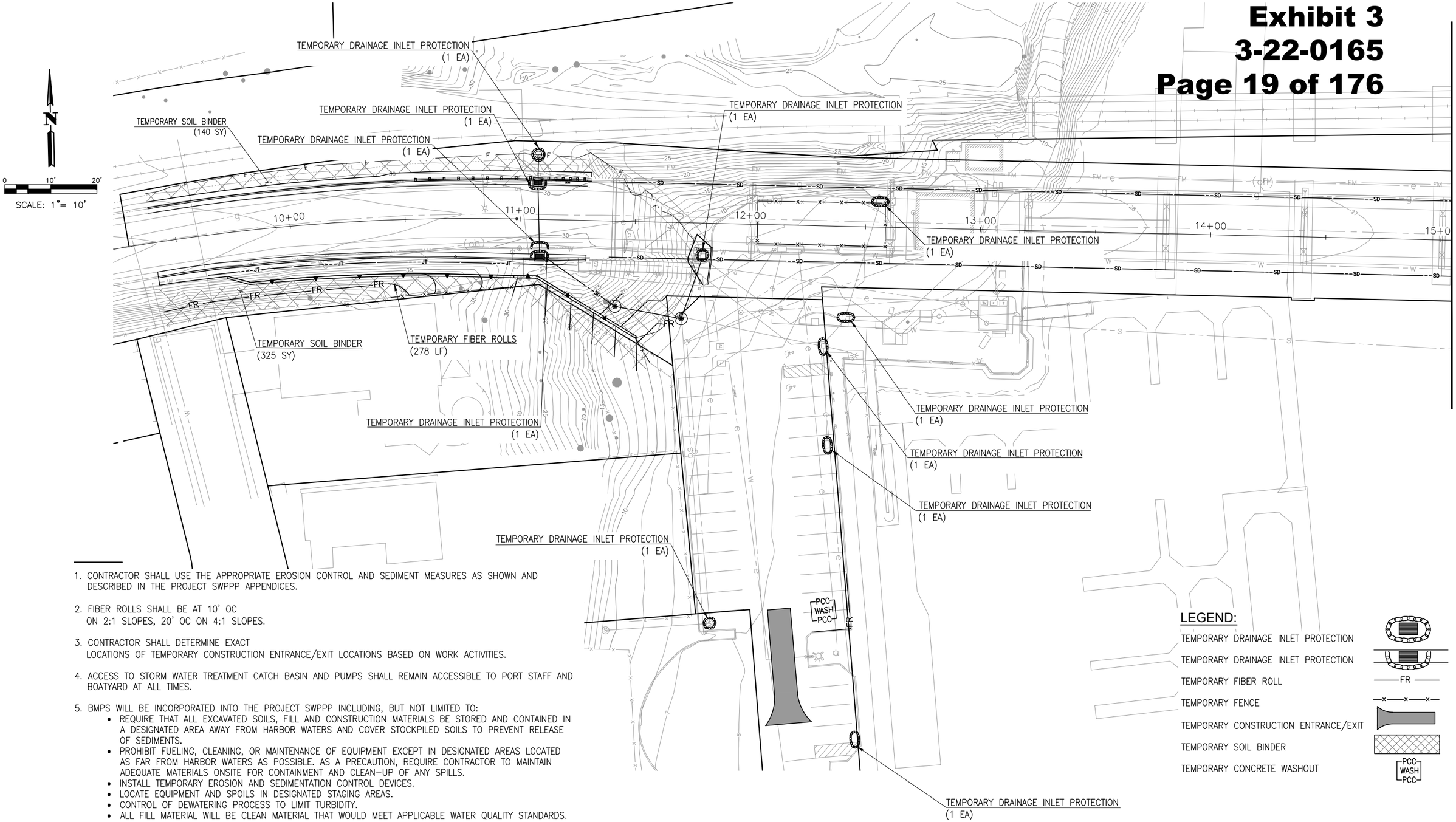

1. CONTRACTOR SHALL USE THE APPROPRIATE EROSION CONTROL AND SEDIMENT MEASURES AS SHOWN AND DESCRIBED IN THE PROJECT SWPPP APPENDICES.

2. FIBER ROLLS SHALL BE AT 10' OC ON 2:1 SLOPES, 20' OC ON 4:1 SLOPES.

3. CONTRACTOR SHALL DETERMINE EXACT LOCATIONS OF TEMPORARY CONSTRUCTION ENTRANCE/EXIT LOCATIONS BASED ON WORK ACTIVITIES.

4. ACCESS TO STORM WATER TREATMENT CATCH BASIN AND PUMPS SHALL REMAIN ACCESSIBLE TO PORT STAFF AND BOATYARD AT ALL TIMES.

5. BMPS WILL BE INCORPORATED INTO THE PROJECT SWPPP INCLUDING, BUT NOT LIMITED TO:
   - REQUIRE THAT ALL EXCAVATED SOILS, FILL AND CONSTRUCTION MATERIALS BE STORED AND CONTAINED IN A DESIGNATED AREA AWAY FROM HARBOR WATERS AND COVER STOCKPILED SOILS TO PREVENT RELEASE OF SEDIMENTS.
   - PROHIBIT FUELING, CLEANING, OR MAINTENANCE OF EQUIPMENT EXCEPT IN DESIGNATED AREAS LOCATED AS FAR FROM HARBOR WATERS AS POSSIBLE. AS A PRECAUTION, REQUIRE CONTRACTOR TO MAINTAIN ADEQUATE MATERIALS ONSITE FOR CONTAINMENT AND CLEAN-UP OF ANY SPILLS.
   - INSTALL TEMPORARY EROSION AND SEDIMENTATION CONTROL DEVICES.
   - LOCATE EQUIPMENT AND SPOILS IN DESIGNATED STAGING AREAS.
   - CONTROL OF DEWATERING PROCESS TO LIMIT TURBIDITY.
   - ALL FILL MATERIAL WILL BE CLEAN MATERIAL THAT WOULD MEET APPLICABLE WATER QUALITY STANDARDS.

6. PREPARE AND IMPLEMENT A STORMWATER POLLUTION PREVENTION PLAN THAT FURTHER DETAILS MEASURES FOR EROSION, SEDIMENT AND WATER QUALITY CONTROL.

THIS PLAN ACCURATE FOR TEMPORARY WATER POLLUTION CONTROL WORK ONLY.

100% SUBMITTAL NOT FOR CONSTRUCTION

NOTE: THE CONTRACTOR SHALL VERIFY ALL CONTROLLING FIELD DIMENSIONS BEFORE ORDERING OR FABRICATING ANY MATERIAL.

WPC-1

REGISTERED PROFESSIONAL ENGINEER JUSTIN L. CONKLIN No. 5[illegible] 36-30-23 CIVIL STATE OF CALIFORNIA

REGISTERED ENGINEER – CIVIL

TRC Engineers or its officers or agents shall not be responsible for the accuracy or completeness of electronic copies of this plan sheet

CITY OF SANTA CRUZ

PREPARED FOR THE CITY OF SANTA CRUZ PUBLIC WORKS DEPARTMENT

DESIGN	BY A. BEDAL	CHECKED J. CONKLIN
DETAILS	BY A. BEDAL	CHECKED J. CONKLIN
QUANTITIES	BY	CHECKED

ORIGINAL SCALE IN INCHES FOR REDUCED PLANS 0 1 2 3

TRC

MARK IMBRIANI
PROJECT MANAGER

BRIDGE NO. 36C0108
CONTRACT NO.
EA NO.

MURRAY STREET BRIDGE
SEISMIC RETROFIT AND BARRIER REPLACEMEN
TEMPORARY WATER POLLUTION CONTROL PLAN

DISREGARD PRINTS BEARING EARLIER REVISION DATES → 6/30/16

REVISION DATES (PRELIMINARY STAGE ONLY)

SCALE 1"=20'
SHEET 19 OF 167
VAULT NO. XXXXXXX

Drawing name: H:\1161 – Santa Cruz\Road\Sheets\016-TWP01.dwg Layout Tab: WPC-1 Aug 27,2021 – 11:36am MBeem

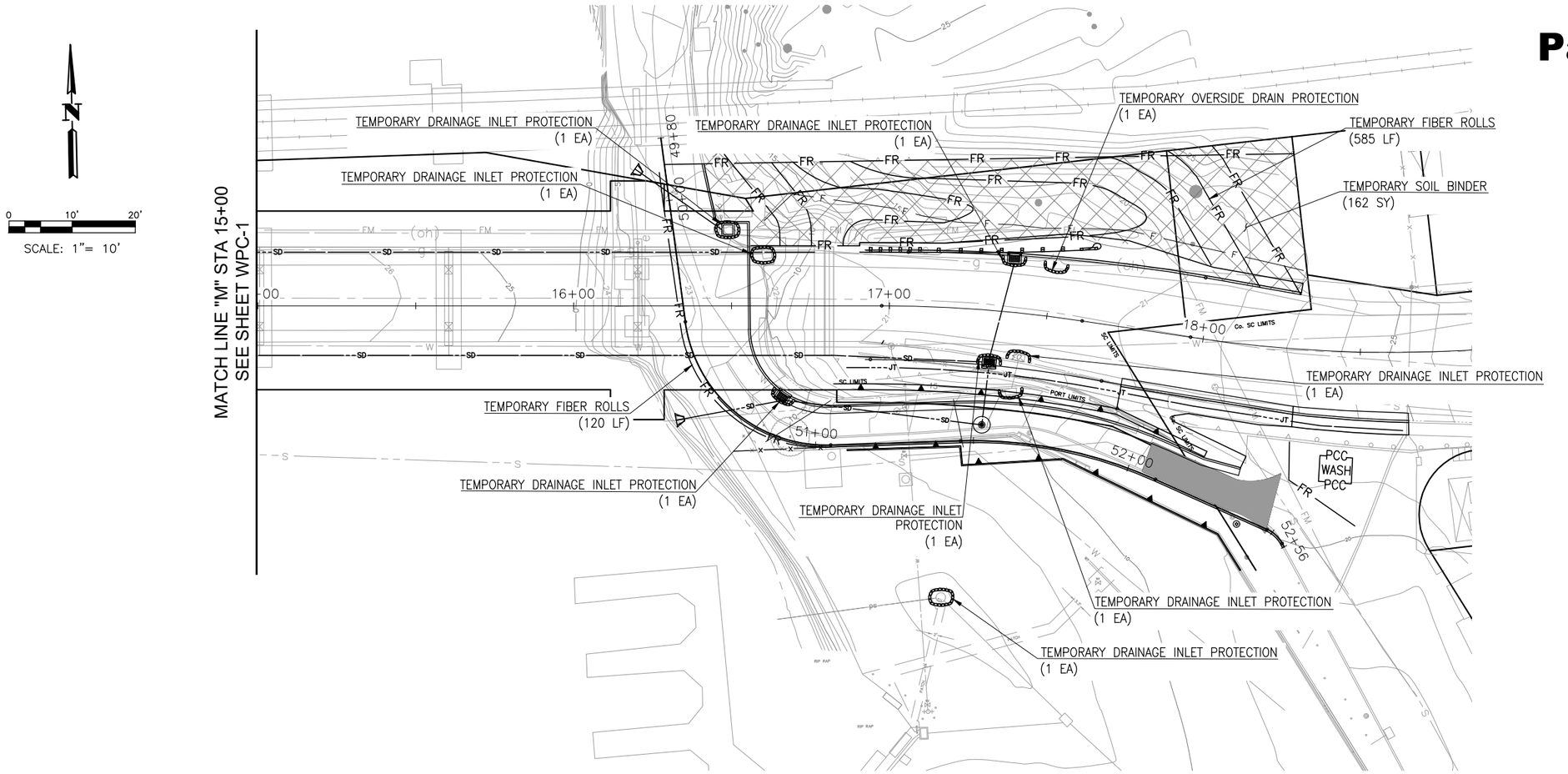

THIS PLAN ACCURATE FOR TEMPORARY WATER POLLUTION CONTROL WORK ONLY.

100% SUBMITTAL
NOT FOR CONSTRUCTION

NOTE:
THE CONTRACTOR SHALL VERIFY ALL CONTROLLING FIELD DIMENSIONS BEFORE ORDERING OR FABRICATING ANY MATERIAL.

WPC-2

REGISTERED PROFESSIONAL ENGINEER
JUSTIN L. CONKLIN
No. 5[illegible]
6-30-23
CIVIL
STATE OF CALIFORNIA

REGISTERED ENGINEER – CIVIL

TRC Engineers or its officers or agents shall not be responsible for the accuracy or completeness of electronic copies of this plan sheet

CITY OF SANTA CRUZ

PREPARED FOR THE
CITY OF SANTA CRUZ
PUBLIC WORKS DEPARTMENT

DESIGN	BY A. BEDAL	CHECKED J. CONKLIN
DETAILS	BY A. BEDAL	CHECKED J. CONKLIN
QUANTITIES	BY	CHECKED

ORIGINAL SCALE IN INCHES FOR REDUCED PLANS 0 1 2 3

TRC
MARK IMBRIANI
PROJECT MANAGER

BRIDGE NO. 36C0108
CONTRACT NO.
EA NO.

MURRAY STREET BRIDGE
SEISMIC RETROFIT AND BARRIER REPLACEMEN
TEMPORARY WATER POLLUTION CONTROL PLAN

DISREGARD PRINTS BEARING EARLIER REVISION DATES → 6/30/16

REVISION DATES (PRELIMINARY STAGE ONLY)

SCALE 1"=20'
SHEET 20 OF 167
VAULT NO. XXXXXXX

Drawing name: H:\1161 – Santa Cruz\Road\Sheets\016-TWP01.dwg Layout Tab: WPC-2 Aug 27,2021 – 11:36am MBeem

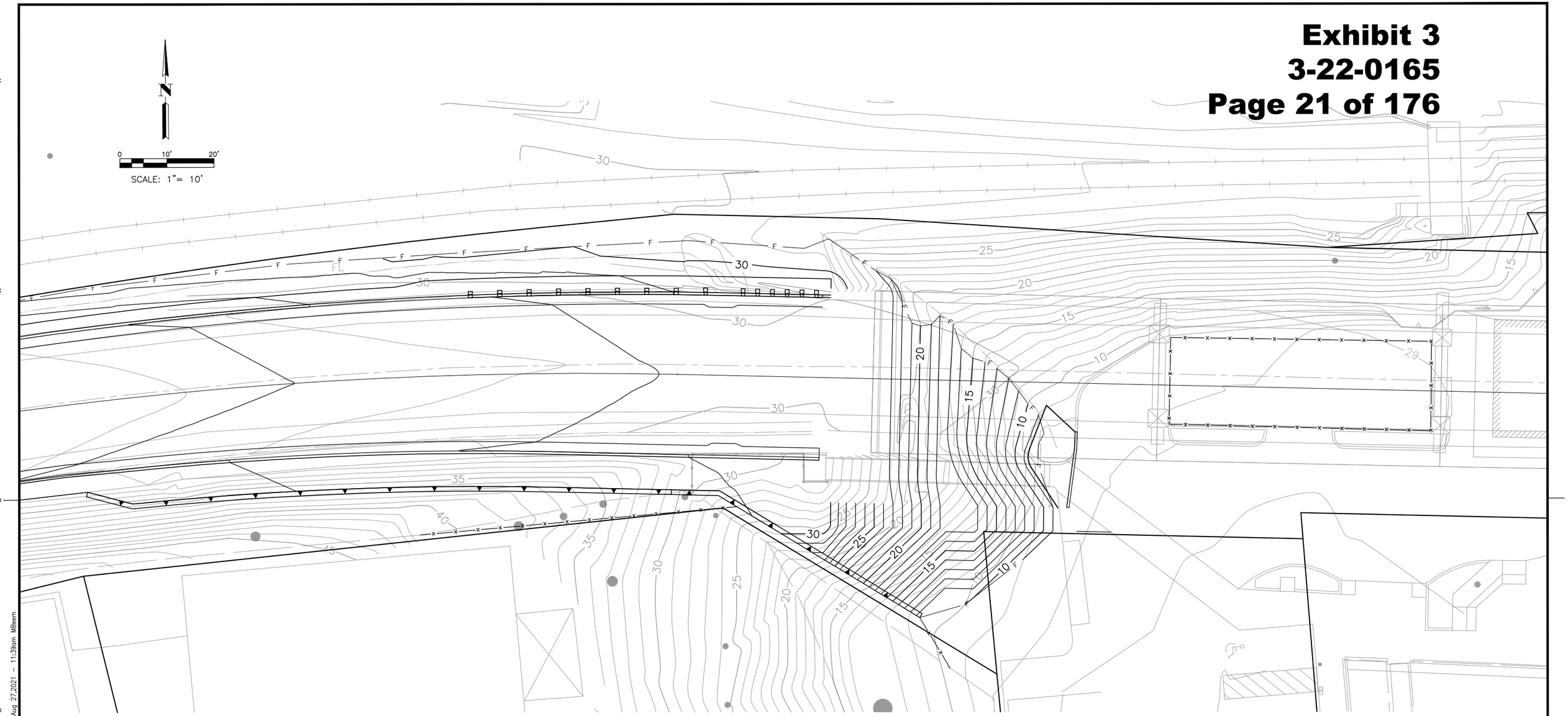

NOTES:
1. THIS PLAN ACCURATE FOR CONTOUR GRADING WORK ONLY.
2. FOR DECK CONTOURS ON BRIDGE SEE SHEET B-29.

100% SUBMITTAL
NOT FOR CONSTRUCTION

NOTE:
THE CONTRACTOR SHALL VERIFY ALL CONTROLLING FIELD DIMENSIONS BEFORE ORDERING OR FABRICATING ANY MATERIAL.

G-1

REGISTERED PROFESSIONAL ENGINEER JUSTIN L. CONKLIN No. [illegible] CIVIL STATE OF CALIFORNIA

REGISTERED ENGINEER – CIVIL

TRC Engineers or its officers or agents shall not be responsible for the accuracy or completeness of electronic copies of this plan sheet

CITY OF SANTA CRUZ

PREPARED FOR THE
CITY OF SANTA CRUZ
PUBLIC WORKS DEPARTMENT

DESIGN	BY A. BEDAL	CHECKED J. CONKLIN
DETAILS	BY A. BEDAL	CHECKED J. CONKLIN
QUANTITIES	BY	CHECKED
ORIGINAL SCALE IN INCHES FOR REDUCED PLANS	0 1 2 3	

TRC
MARK IMBRIANI
PROJECT MANAGER

BRIDGE NO. 36C0108
CONTRACT NO.
EA NO.

MURRAY STREET BRIDGE
SEISMIC RETROFIT AND BARRIER REPLACEMEN
CONTOUR GRADING PLAN

DISREGARD PRINTS BEARING EARLIER REVISION DATES →
REVISION DATES (PRELIMINARY STAGE ONLY)

SCALE 1"=10'
SHEET 21 OF 167
VAULT NO. XXXXXXX

Drawing name: H:\1161 – Santa Cruz\Road\Sheets\019-G.dwg Layout Tab: G-1 Aug 27,2021 – 11:39am MBeem

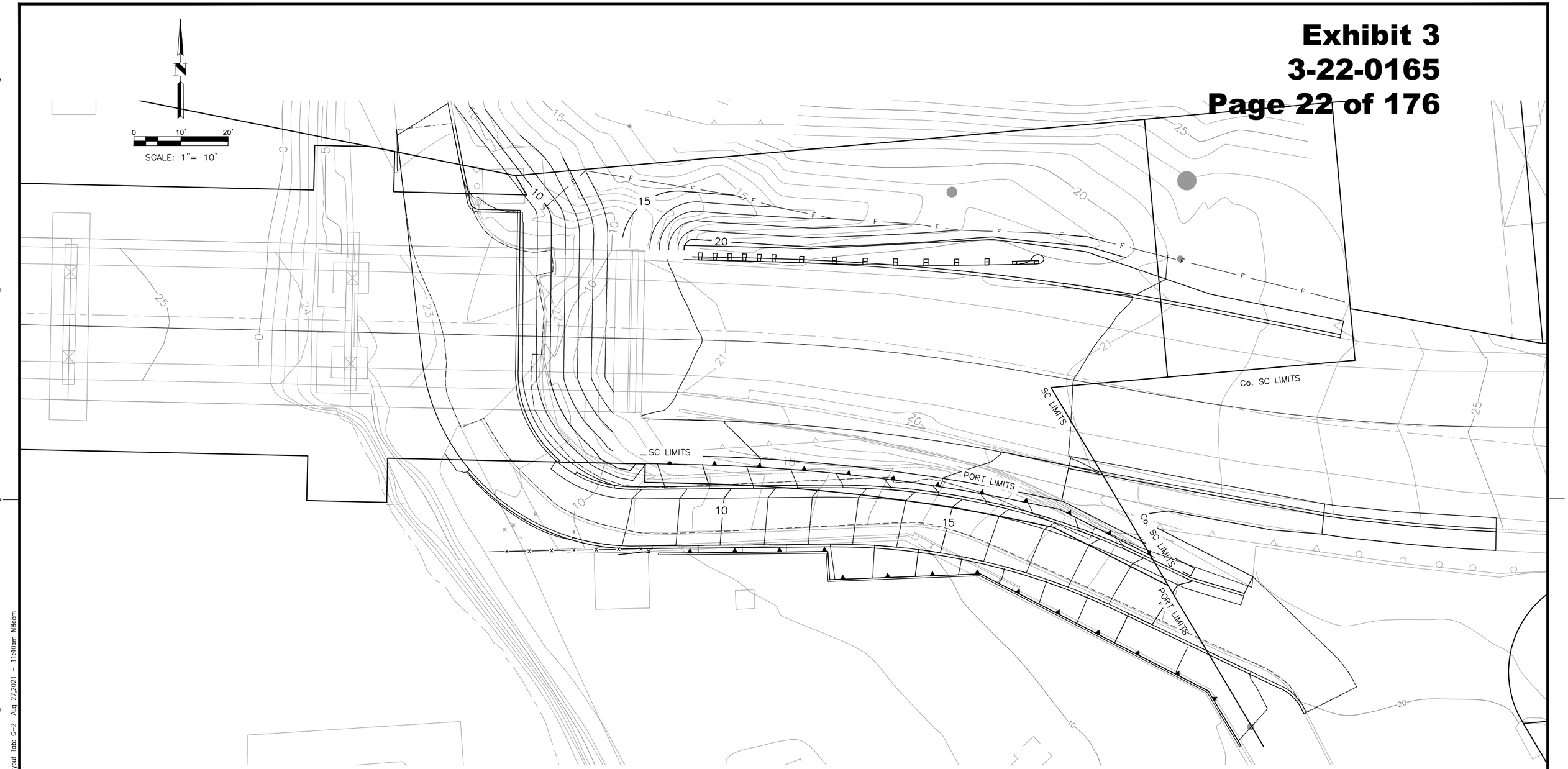

NOTES:
1. THIS PLAN ACCURATE FOR CONTOUR GRADING WORK ONLY.
2. FOR DECK CONTOURS ON BRIDGE SEE SHEET B-29.

100% SUBMITTAL
NOT FOR CONSTRUCTION

NOTE:
THE CONTRACTOR SHALL VERIFY ALL CONTROLLING FIELD DIMENSIONS BEFORE ORDERING OR FABRICATING ANY MATERIAL.

G-2

REGISTERED PROFESSIONAL ENGINEER JUSTIN L. CONKLIN No. 5[illegible] 06-30-23 CIVIL STATE OF CALIFORNIA

REGISTERED ENGINEER – CIVIL

TRC Engineers or its officers or agents shall not be responsible for the accuracy or completeness of electronic copies of this plan sheet

CITY OF SANTA CRUZ

PREPARED FOR THE
CITY OF SANTA CRUZ
PUBLIC WORKS DEPARTMENT

DESIGN	BY A. BEDAL	CHECKED J. CONKLIN
DETAILS	BY A. BEDAL	CHECKED J. CONKLIN
QUANTITIES	BY	CHECKED

ORIGINAL SCALE IN INCHES FOR REDUCED PLANS 0 1 2 3

TRC
MARK IMBRIANI
PROJECT MANAGER

BRIDGE NO. 36C0108
CONTRACT NO.
EA NO.

MURRAY STREET BRIDGE
SEISMIC RETROFIT AND BARRIER REPLACEMEN
CONTOUR GRADING PLAN

DISREGARD PRINTS BEARING EARLIER REVISION DATES
REVISION DATES (PRELIMINARY STAGE ONLY)

SCALE 1"=10'
SHEET 22 OF 167
VAULT NO. XXXXXXX

Drawing name: H:\1161 – Santa Cruz\Road\Sheets\019-G.dwg Layout Tab: G-2 Aug 27,2021 – 11:40am MBeem

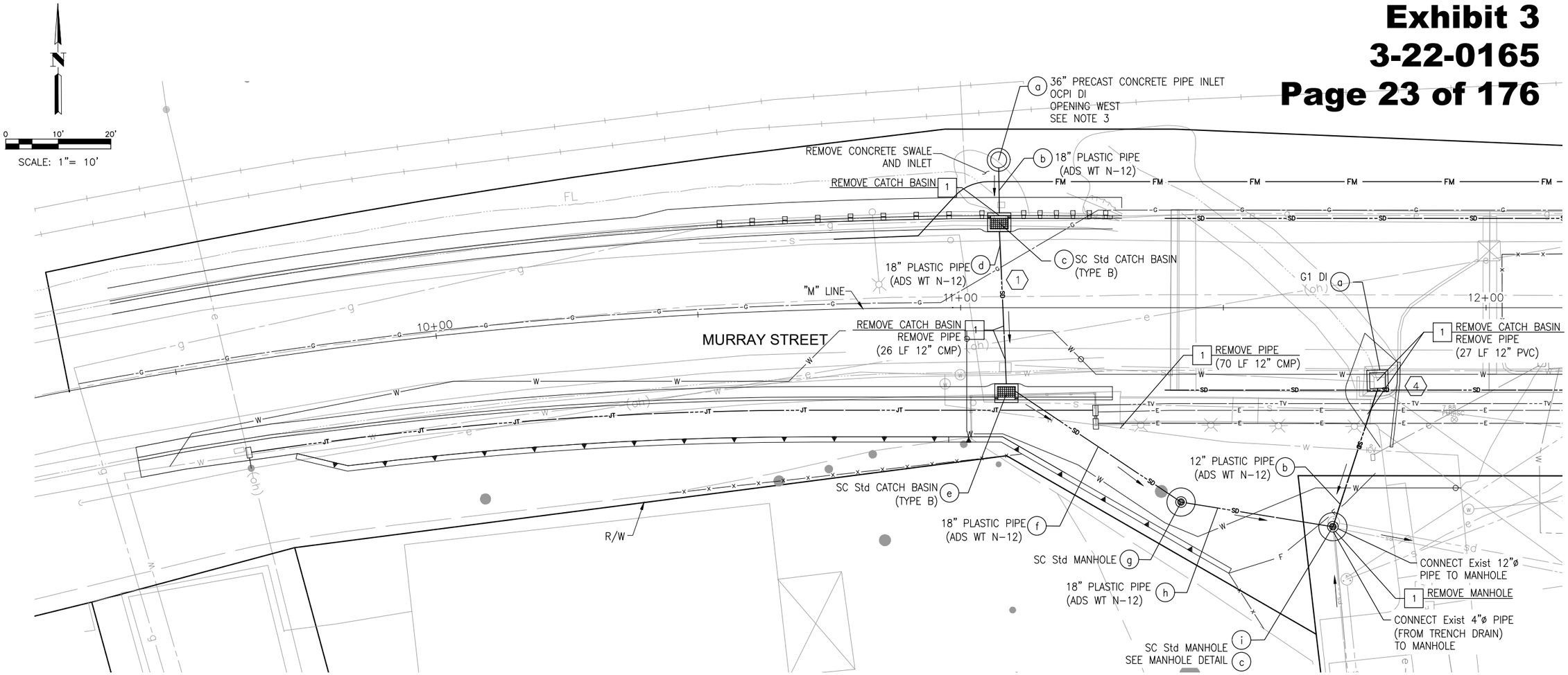

- # DRAINAGE SYSTEM NUMBER
- # DRAINAGE UNIT LETTER
- CITY OF SANTA CRUZ CATCH BASIN
- CITY OF SANTA CRUZ DRAINAGE MANHOLE
- 1 REMOVE DRAINAGE FACILITY

NOTES:

1. CITY OF SANTA CRUZ MANHOLE AND CATCH BASINS REFER TO CITY OF SANTA CRUZ STANDARD DETAILS PAGE 3, 4, & 6 OF 23.
2. REFER TO DRAINAGE PROFILE.
3. FOR OCPI DI DETAILS NOT SHOWN SEE CALTRANS STANDARD PLAN D75B.

ABBREVIATIONS

FES – FLARED END SECTION

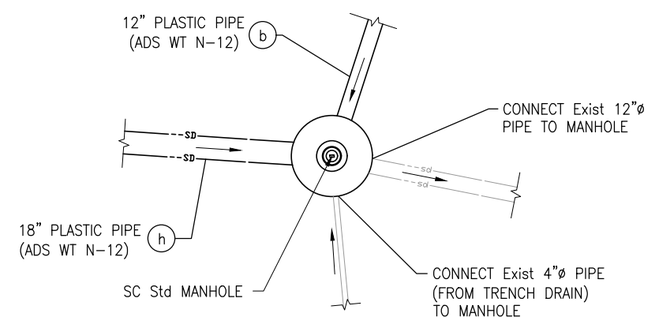

MANHOLE DETAIL
1"=5'

100% SUBMITTAL
NOT FOR CONSTRUCTION

NOTE:
THE CONTRACTOR SHALL VERIFY ALL CONTROLLING FIELD DIMENSIONS BEFORE ORDERING OR FABRICATING ANY MATERIAL.

D-1

THIS PLAN ACCURATE FOR DRAINAGE WORK ONLY

REGISTERED PROFESSIONAL ENGINEER JUSTIN L. CONKLIN No. 5[illegible]-30-23 CIVIL STATE OF CALIFORNIA
REGISTERED ENGINEER – CIVIL
TRC Engineers or its officers or agents shall not be responsible for the accuracy or completeness of electronic copies of this plan sheet

CITY OF SANTA CRUZ
PREPARED FOR THE
CITY OF SANTA CRUZ
PUBLIC WORKS DEPARTMENT

DESIGN	BY A. BEDAL	CHECKED J. CONKLIN
DETAILS	BY A. BEDAL	CHECKED J. CONKLIN
QUANTITIES	BY	CHECKED

ORIGINAL SCALE IN INCHES FOR REDUCED PLANS 0 1 2 3

TRC
MARK IMBRIANI
PROJECT MANAGER

BRIDGE NO. 36C0108
CONTRACT NO.
EA NO.

MURRAY STREET BRIDGE
SEISMIC RETROFIT AND BARRIER REPLACEMEN
DRAINAGE PLAN

DISREGARD PRINTS BEARING EARLIER REVISION DATES
REVISION DATES (PRELIMINARY STAGE ONLY)

SCALE 1"=10'
SHEET 23 OF 167
VAULT NO. XXXXXXX

Drawing name: H:\1161 – Santa Cruz\Road\Sheets\021-D.dwg Layout Tab: D1 West Aug 26,2021 – 4:04pm MBeem

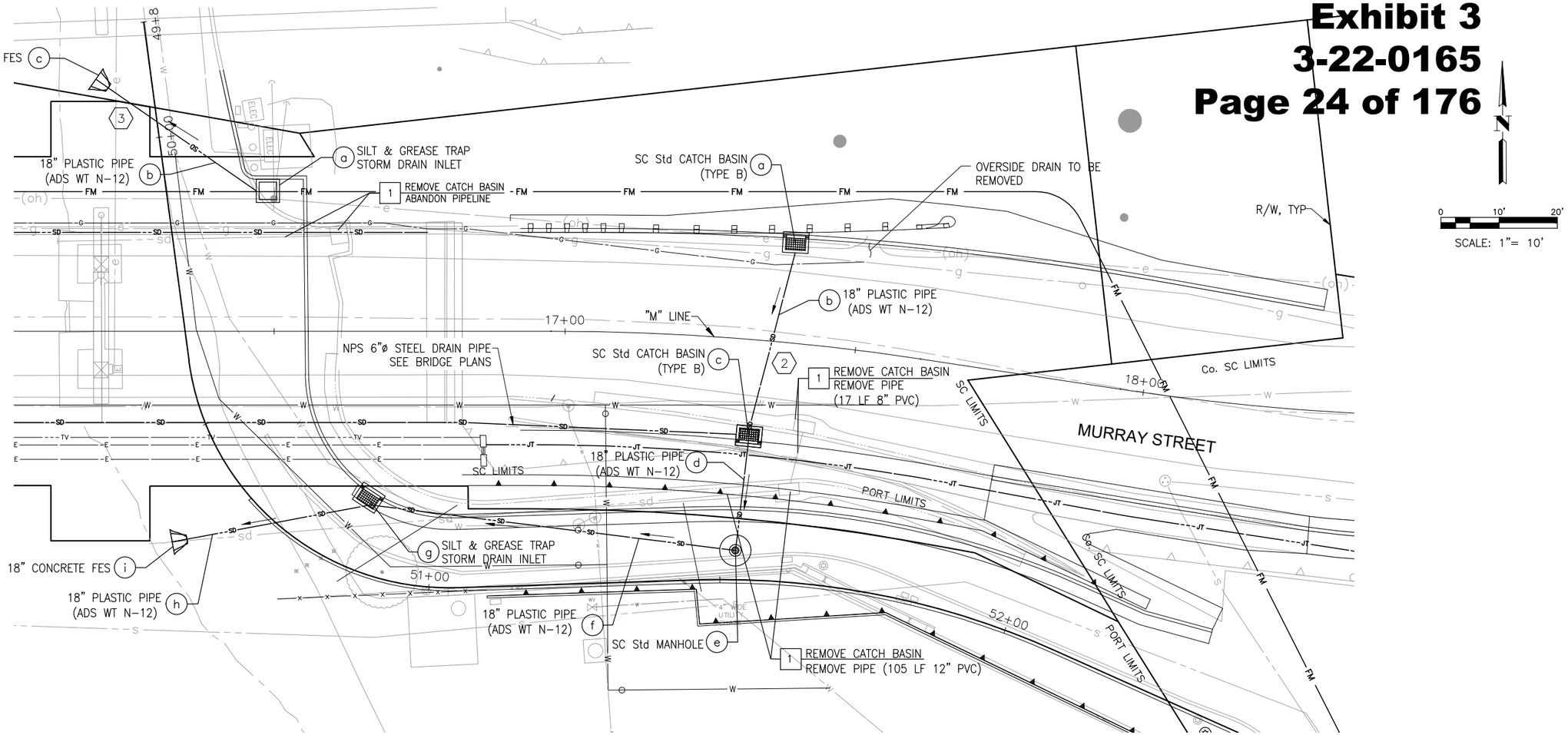

(#) DRAINAGE SYSTEM NUMBER

(#) DRAINAGE UNIT LETTER

CITY OF SANTA CRUZ CATCH BASIN

CITY OF SANTA CRUZ DRAINAGE MANHOLE

1 REMOVE DRAINAGE FACILITY

NOTES:

1. CITY OF SANTA CRUZ MANHOLE AND CATCH BASINS REFER TO CITY OF SANTA CRUZ STANDARD DETAILS PAGE 3, 4, & 6 OF 23.
2. REFER TO DRAINAGE PROFILE

ABBREVIATIONS

FES – FLARED END SECTION

RCP – REINFORCED CONCRETE PIPE

100% SUBMITTAL NOT FOR CONSTRUCTION

NOTE:
THE CONTRACTOR SHALL VERIFY ALL CONTROLLING FIELD DIMENSIONS BEFORE ORDERING OR FABRICATING ANY MATERIAL.

D-2

THIS PLAN ACCURATE FOR DRAINAGE WORK ONLY

REGISTERED PROFESSIONAL ENGINEER JUSTIN L. CONKLIN No. 81159 12-30-23 CIVIL STATE OF CALIFORNIA

REGISTERED ENGINEER – CIVIL

TRC Engineers or its officers or agents shall not be responsible for the accuracy or completeness of electronic copies of this plan sheet

CITY OF SANTA CRUZ

PREPARED FOR THE
CITY OF SANTA CRUZ
PUBLIC WORKS DEPARTMENT

DESIGN	BY A. BEDAL	CHECKED J. CONKLIN	
DETAILS	BY A. BEDAL	CHECKED J. CONKLIN	
QUANTITIES	BY	CHECKED	
ORIGINAL SCALE IN INCHES FOR REDUCED PLANS	0 1 2 3		

TRC
MARK IMBRIANI
PROJECT MANAGER

BRIDGE NO. 36C0108
CONTRACT NO.
EA NO.

MURRAY STREET BRIDGE
SEISMIC RETROFIT AND BARRIER REPLACEMEN
DRAINAGE PLAN

DISREGARD PRINTS BEARING EARLIER REVISION DATES
REVISION DATES (PRELIMINARY STAGE ONLY)

SCALE 1"=10'
SHEET 24 OF 167
VAULT NO. XXXXXXX

Drawing name: H:\1161 – Santa Cruz\Road\Sheets\021-D.dwg Layout Tab: D2 East Aug 26,2021 – 4:05pm MBeem

STORM DRAIN

SHEET No.	DRAINAG SYSTEM No.	DRAINAGE UNIT	REMOVE MANHOLE	REMOVE CATCH BASIN	REMOVE PIPE	CATCH BASIN (CITY STANDARD TYPE B)	OIL AND SEDIMENT TRAP (CITY STANDARD)	MANHOLE (CITY STANDARD)	12" PLASTIC PIPE (ADS WT N-12)	18" PLASTIC PIPE (ADS WT N-12)	18" CONCRETE FLARED END SECTION	36" PRECAST CONCRETE PIPE INLET	MINOR CONCRETE (MINOR STRUCTURE)	MISCELLANEOUS IRON AND STEEL	FRAME AND COVER	DESCRIPTION
			EA	EA	EA	EA	EA	EA	LF	LF	EA	LF	CY	LB	EA	
DP-1	1	a										3.8		22	1	OCPI DI, TRASH RACK
		b								9						
		c				1										
		d								30						
		e				1										
		f								36						
		g						1								
		h								28						
		i						*								
DP-1	2	a				1										
		b								32						
		c				1										
		d								17						
		e						1								
		f								60						
		g					1									
		h								33						
		i									1					
DP-2	3	a					1									
		b								42						
		c									1					
DP-2	4	a											0.9	263		G1 DI, GRATE TYPE 24-9
		b							26							
		c						1								
D-1			1	3	123											
D-2				3	114											
		TOTAL	1	6	237	4	2	4	26	286	2	3.8	0.9	285	1	

* - SAME AS DRAINAGE UNIT "C" OF DRAINAGE SYSTEM No. 4

100% SUBMITTAL
NOT FOR CONSTRUCTION

NOTE:
THE CONTRACTOR SHALL VERIFY ALL CONTROLLING FIELD DIMENSIONS BEFORE ORDERING OR FABRICATING ANY MATERIAL.

DQ-1

REGISTERED PROFESSIONAL ENGINEER JUSTIN L. CONKLIN No. 50-23 CIVIL STATE OF CALIFORNIA
REGISTERED ENGINEER – CIVIL
TRC Engineers or its officers or agents shall not be responsible for the accuracy or completeness of electronic copies of this plan sheet

CITY OF SANTA CRUZ

PREPARED FOR THE
CITY OF SANTA CRUZ
PUBLIC WORKS DEPARTMENT

DESIGN	BY A. BEDAL	CHECKED J. CONKLIN	
DETAILS	BY D. LOR	CHECKED J. CONKLIN	
QUANTITIES	BY A. BEDAL	CHECKED J. CONKLIN	
ORIGINAL SCALE IN INCHES FOR REDUCED PLANS	0 1 2 3		

TRC
MARK IMBRIANI
PROJECT MANAGER

BRIDGE NO. 36C0108
CONTRACT NO.
EA NO.

MURRAY STREET BRIDGE
SEISMIC RETROFIT AND BARRIER REPLACEMEN
DRAINAGE QUANTITIES

DISREGARD PRINTS BEARING EARLIER REVISION DATES
REVISION DATES (PRELIMINARY STAGE ONLY)

SCALE NTS
SHEET 27 OF 167
VAULT NO. XXXXXXX

Drawing name: H:\1161 – Santa Cruz\Road\Sheets\023-DQ.dwg Layout Tab: DQ-1 Sep 21,2021 – 12:26pm DLor

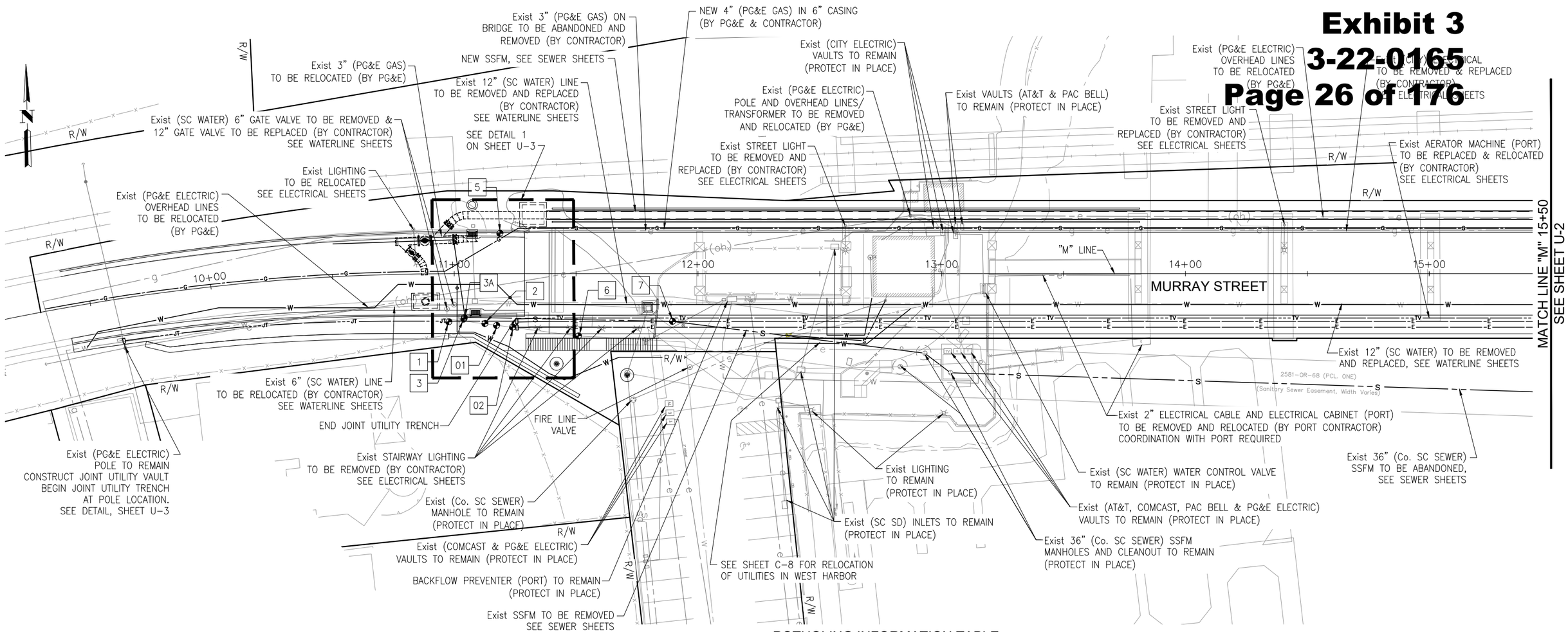

POTHOLING INFORMATION TABLE

##	NORTHING	EASTING	STATION	OFFSET	OG ELEVATION	DEPTH*	OWNER	SIZE
1	1814318.2624	6122235.1630	"M" 10+97.74	19.77' Rt	31.53	3.58'	SC WATER	6" IRON
01	1814316.3370	6122254.7310	"M" 11+17.36	21.25' Rt	29.10	2.08'	SC WATER	6" IRON
2	1814317.2200	6122249.9810	"M" 11+12.59	20.48' Rt	29.54	2.50'	SC WATER	6" IRON
02	1814315.5070	6122261.2580	"M" 11+23.95	21.94' Lt	29.07	2.08'	SC WATER	6" IRON
3	1814319.2656	6122241.3645	"M" 11+03.93	18.63' Rt	30.51	3.58'	SC WATER	SC WATER
3A	1814319.7584	6122241.5146	"M" 11+04.07	18.13' Rt	30.56	6.67'	SC SEWER	30" SSFM
5	1814354.1160	6122256.9380	"M" 11+18.71	16.57' Lt	29.99	5.58'	PG&E	UNKNOWN
6	1814311.2400	6122288.1870	"M" 11+50.92	25.59' Rt	20.30	3.00'	SC WATER	6" IRON
7	1814316.358	6122326.9500	"M" 11+89.56	19.60' Rt	7.87	4.50'	SC SEWER	30" SSFM

THIS PLAN IS ACCURATE FOR UTILITY WORK ONLY * DEPTH MEASURED FROM OG TO TOP OF PIPE

LEGEND:

—— g ——	Exist NATURAL GAS	—— G ——	NEW NATURAL GAS
—— e ——(oh)——	Exist OVERHEAD ELECTRICAL	—— E ——(OH)——	NEW OVERHEAD ELECTRICAL
—— e ——	Exist ELECTRICAL	—— E ——	NEW ELECTRICAL
—— sd ——	Exist STORM DRAIN	—— SD ——	NEW STORM DRAIN
—— t ——	Exist TELEPHONE	—— T ——	NEW TELEPHONE
—— w ——	Exist WATER	—— W ——	NEW WATER
—— s ——	Exist SEWER	—— S ——	NEW SEWER
—— tv ——	Exist TELEVISION	—— TV ——	NEW COMCAST
◔	POTHOLE LOCATION	##	POTHOLE NUMBER
Ⓦ	WATER VALVE	SSFM – SANITARY SEWER FORCE MAIN	

NOTES:

1. LOCATION OF UTILITY FACILITIES SHOWN ON THE PLANS ARE APPROXIMATE AND SHALL BE VERIFIED BY THE CONTRACTOR PRIOR TO CONSTRUCTION.
2. UTILITY OWNERSHIP ON THIS PROJECT:

   AT&T – AMERICAN TELEPHONE & TELEGRAPH (TELEPHONE)
   Co. SC – COUNTY OF SANTA CRUZ
   SC SD – CITY OF SANTA CRUZ (STORM DRAIN)
   SC SEWER – CITY OF SANTA CRUZ (SEWER)
   SC WATER – CITY OF SANTA CRUZ (WATER)
   PG&E – PACIFIC GAS & ELECTRIC (GAS & ELECTRIC)
   COMCAST – (CABLE)
   PORT – SANTA CRUZ PORT DISTRICT

100% SUBMITTAL NOT FOR CONSTRUCTION

NOTE:
THE CONTRACTOR SHALL VERIFY ALL CONTROLLING FIELD DIMENSIONS BEFORE ORDERING OR FABRICATING ANY MATERIAL.

U-1

REGISTERED PROFESSIONAL ENGINEER JUSTIN L. CONKLIN No. 5109 CIVIL STATE OF CALIFORNIA
REGISTERED ENGINEER – CIVIL
TRC Engineers or its officers or agents shall not be responsible for the accuracy or completeness of electronic copies of this plan sheet

CITY OF SANTA CRUZ

PREPARED FOR THE
CITY OF SANTA CRUZ
PUBLIC WORKS DEPARTMENT

	BY	CHECKED
DESIGN	A. BEDAL	J. CONKLIN
DETAILS	A. BEDAL	J. CONKLIN
QUANTITIES		
ORIGINAL SCALE IN INCHES FOR REDUCED PLANS	0 1 2 3	

TRC
MARK IMBRIANI
PROJECT MANAGER

BRIDGE NO. 36C0108
CONTRACT NO.
EA NO.

MURRAY STREET BRIDGE SEISMIC RETROFIT AND BARRIER REPLACEMEN
UTILITY PLAN

DISREGARD PRINTS BEARING EARLIER REVISION DATES
REVISION DATES (PRELIMINARY STAGE ONLY): 09-28-15 11-23-15 07-08-21 09-17-21

SCALE 1"=20'
SHEET 28 OF 167
VAULT NO. XXXXXXX

Drawing name: H:\1161 – Santa Cruz\Road\Sheets\024-UP.dwg Layout Tab: U1 Sep 20,2021 – 2:10pm ACordoza

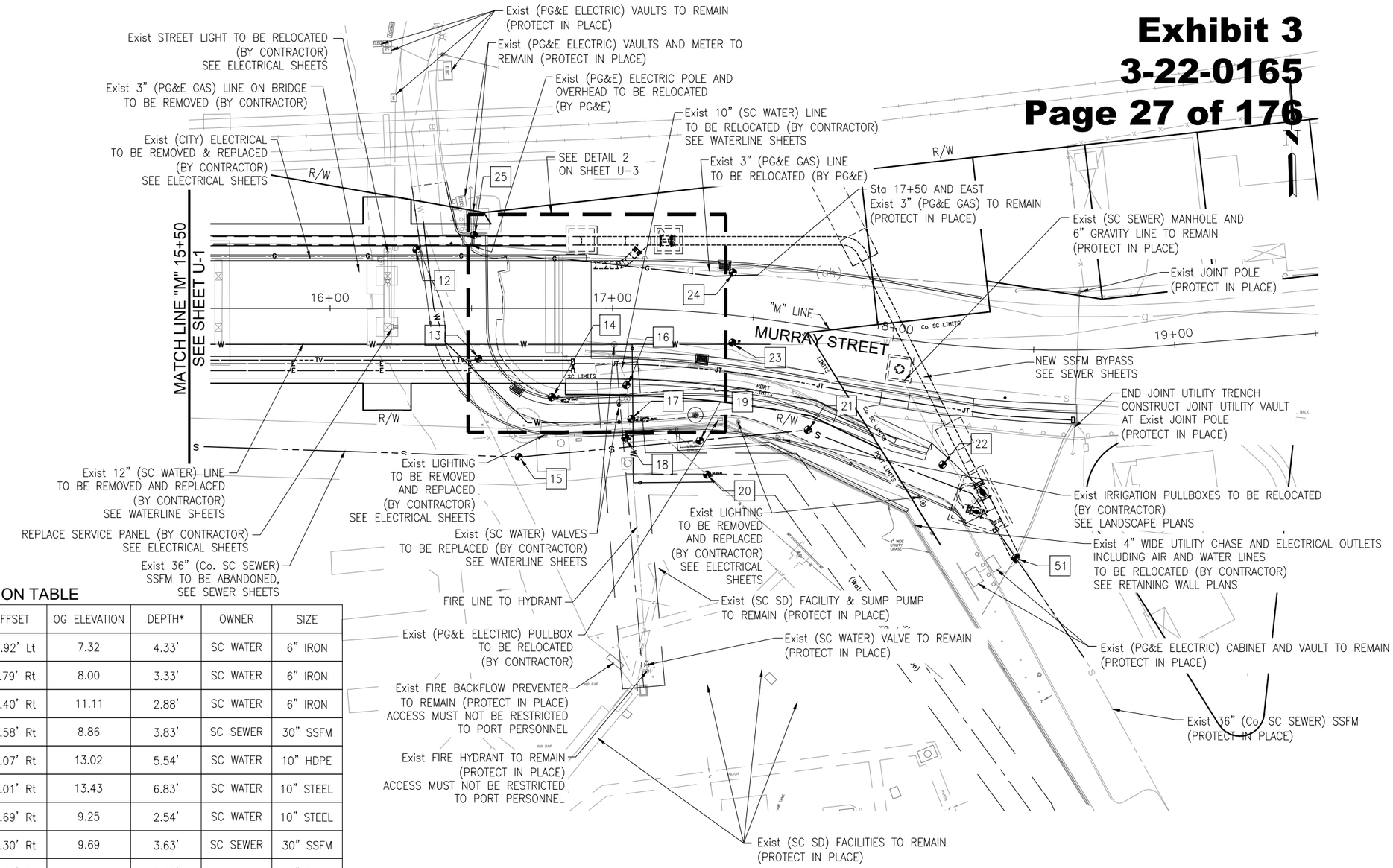

POTHOLING INFORMATION TABLE

##	NORTHING	EASTING	STATION	OFFSET	OG ELEVATION	DEPTH*	OWNER	SIZE
12	1814346.8632	6122768.6852	"M" 16+30.49	20.92' Lt	7.32	4.33'	SC WATER	6" IRON
13	1814307.6740	6122789.7480	"M" 16+52.44	17.79' Rt	8.00	3.33'	SC WATER	6" IRON
14	1814293.4770	6122815.4020	"M" 16+78.41	31.40' Rt	11.11	2.88'	SC WATER	6" IRON
15	1814272.5670	6122803.2760	"M" 16+66.76	52.58' Rt	8.86	3.83'	SC SEWER	30" SSFM
16	1814297.1423	6122841.9175	"M" 17+05.32	27.07' Rt	13.02	5.54'	SC WATER	10" HDPE
17	1814285.1270	6122843.3900	"M" 17+07.48	39.01' Rt	13.43	6.83'	SC WATER	10" STEEL
18	1814278.5340	6122841.1230	"M" 17+08.29	45.69' Rt	9.25	2.54'	SC WATER	10" STEEL
19	1814276.9330	6122867.4800	"M" 17+34.86	45.30' Rt	9.69	3.63'	SC SEWER	30" SSFM
20	1814264.8120	6122869.7620	"M" 17+39.02	57.08' Rt	9.23	3.00'	SC WATER	6" PVC
21	1814279.8650	6122905.8380	"M" 17+74.98	36.56' Rt	18.29	9.67'	SC SEWER	30" SSFM
22	1814266.4240	6122953.2530	"M" 18+21.48	42.49' Rt	20.87	7.75'	SC SEWER	30" SSFM
23	1814311.3450	6122879.8250	"M" 17+43.54	9.65' Rt	20.55	4.00'	SC WATER	12" IRON
24	1814336.1610	6122880.5420	"M" 17+41.10	15.05' Lt	20.39	3.92'	PG&E	3" IRON
25	1814351.5362	6122789.1581	"M" 16+50.85	26.05' Lt	8.12	3.00'	PG&E	3" IRON
51	1814232.8816	6122978.3989	"M" 18+45.99	73.82' Rt	?	?	SC SEWER	30" SSFM

* DEPTH MEASURED FROM OG TO TOP OF PIPE

THIS PLAN IS ACCURATE FOR UTILITY WORK ONLY

100% SUBMITTAL NOT FOR CONSTRUCTION

NOTE:
THE CONTRACTOR SHALL VERIFY ALL CONTROLLING FIELD DIMENSIONS BEFORE ORDERING OR FABRICATING ANY MATERIAL.

U-2

REGISTERED PROFESSIONAL ENGINEER JUSTIN L. CONKLIN No. 51108 Exp. 30-23 CIVIL STATE OF CALIFORNIA

REGISTERED ENGINEER – CIVIL

TRC Engineers or its officers or agents shall not be responsible for the accuracy or completeness of electronic copies of this plan sheet

CITY OF SANTA CRUZ

PREPARED FOR THE CITY OF SANTA CRUZ PUBLIC WORKS DEPARTMENT

	BY	CHECKED
DESIGN	A. BEDAL	J. CONKLIN
DETAILS	A. BEDAL	J. CONKLIN
QUANTITIES		

ORIGINAL SCALE IN INCHES FOR REDUCED PLANS 0 1 2 3

TRC
MARK IMBRIANI
PROJECT MANAGER

BRIDGE NO. 36C0108
CONTRACT NO.
EA NO.

MURRAY STREET BRIDGE SEISMIC RETROFIT AND BARRIER REPLACEMEN
UTILITY PLAN

DISREGARD PRINTS BEARING EARLIER REVISION DATES
REVISION DATES (PRELIMINARY STAGE ONLY) 09-28-15 11-23-15 07-08-21 09-17-21

SCALE 1"=20'
SHEET 29 OF 167
VAULT NO. XXXXXXX

Drawing name: H:\1161 – Santa Cruz\Road\Sheets\024-UP.dwg Layout Tab: U2 Sep 20,2021 – 2:11pm ACardoza

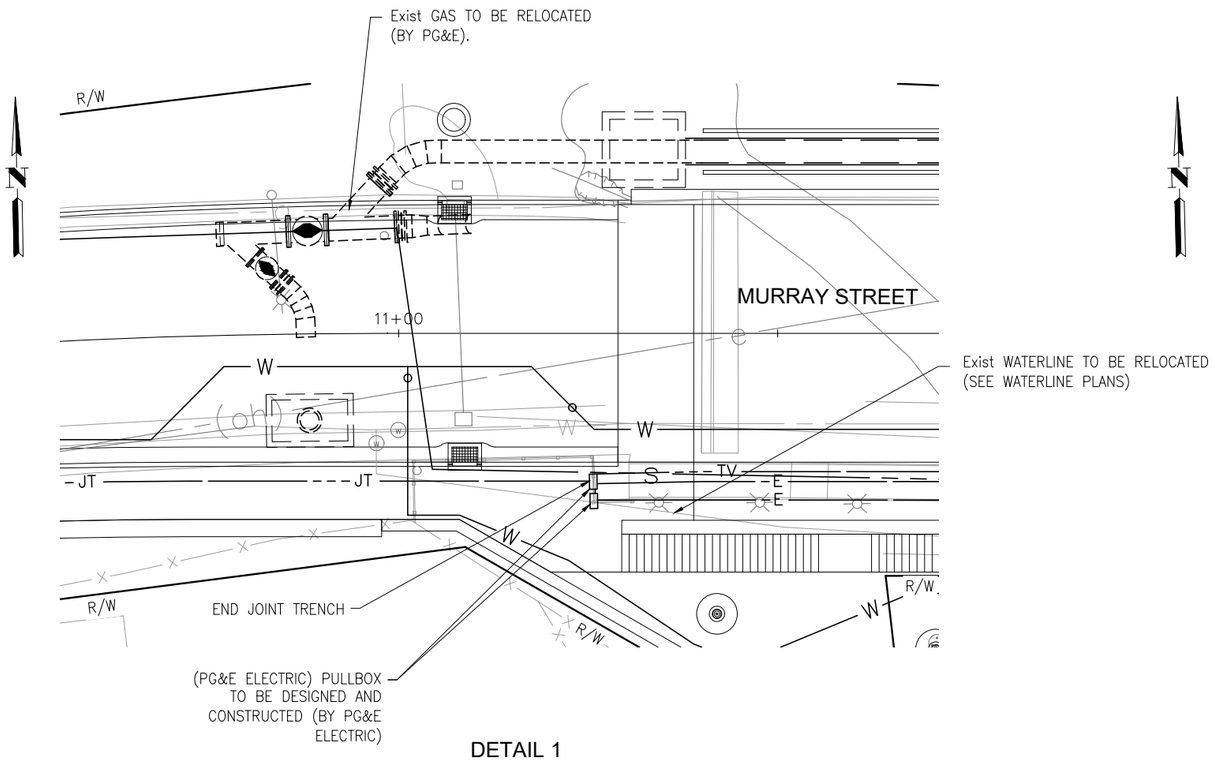

DETAIL 1
1"=10'

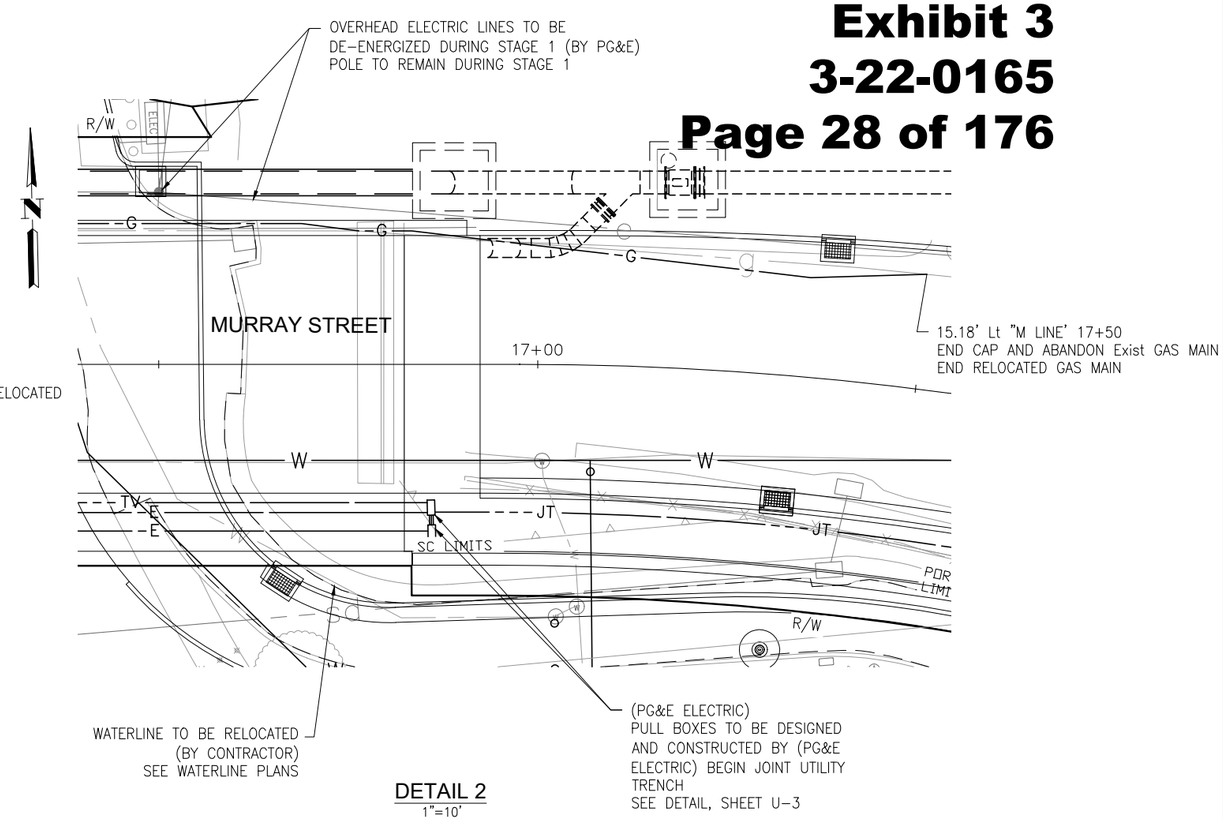

DETAIL 2
1"=10'

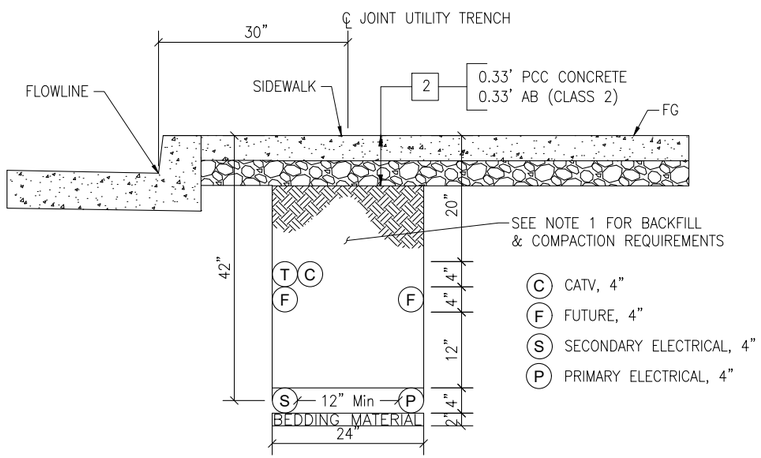

JOINT UTILITY TRENCH DETAIL
NO SCALE

NOTES:

1. REFER TO CURRENT PG&E ELECTRICS & GAS SERVICE REQUIREMENTS (GREENBOOK) FOR TRENCH CONFIGURATION, EXCAVATION, BACKFILL, AND DETAILS NOT SHOWN. SEE S5453 EXHIBIT B.
2. BEDDING MATERIAL SHALL CONSIST OF 3/4" CRUSHED ROCK OR APPROVED EQUAL BY ENGINEER.

THIS PLAN IS ACCURATE FOR UTILITY WORK ONLY

100% SUBMITTAL NOT FOR CONSTRUCTION

NOTE:
THE CONTRACTOR SHALL VERIFY ALL CONTROLLING FIELD DIMENSIONS BEFORE ORDERING OR FABRICATING ANY MATERIAL.

U-3

REGISTERED PROFESSIONAL ENGINEER JUSTIN L. CONKLIN No. 5[illegible] 6-30-23 CIVIL STATE OF CALIFORNIA
REGISTERED ENGINEER – CIVIL
TRC Engineers or its officers or agents shall not be responsible for the accuracy or completeness of electronic copies of this plan sheet

CITY OF SANTA CRUZ
PREPARED FOR THE CITY OF SANTA CRUZ PUBLIC WORKS DEPARTMENT

DESIGN	BY A. BEDAL	CHECKED J. CONKLIN
DETAILS	BY A. BEDAL	CHECKED J. CONKLIN
QUANTITIES	BY	CHECKED
ORIGINAL SCALE IN INCHES FOR REDUCED PLANS	0 1 2 3	

TRC
MARK IMBRIANI
PROJECT MANAGER

BRIDGE NO. 36C0108
CONTRACT NO.
EA NO.

MURRAY STREET BRIDGE
SEISMIC RETROFIT AND BARRIER REPLACEMEN
UTILITY PLAN

DISREGARD PRINTS BEARING EARLIER REVISION DATES
REVISION DATES (PRELIMINARY STAGE ONLY) 10-15-15 11-23-15 07-09-21 09-17-21

SCALE 1"=20'
SHEET 30 OF 167
VAULT NO. XXXXXXX

Drawing name: H:\1161 – Santa Cruz\Road\Sheets\024-UP.dwg Layout Tab: U3 Sep 20,2021 – 2:11pm ACardoza

CITY OF SANTA CRUZ WATER DEPARTMENT STANDARD CONSTRUCTION NOTES:

1. ALL WORK ON THE WATER SYSTEM SHALL BE IN CONFORMANCE WITH THE CITY OF SANTA CRUZ WATER SYSTEM STANDARD SPECIFICATIONS AND DETAILS, DECEMBER 2009 REVISION.

2. THE CONTRACTOR SHALL SUBMIT AT LEAST 2 COPIES OF THE PROJECT SCHEDULE AND SUBMITTALS FOR ALL MATERIALS THAT WILL BECOME THE PROPERTY OF SCWD. DELIVER TO THE PROJECT ENGINEER PRIOR TO START OF CONSTRUCTION AND WITH SUFFICIENT TIME TO VERIFY COMPLIANCE:
   212 LOCUST STREET, SUITE C
   SANTA CRUZ, CA 95060

3. THE CONTRACTOR SHALL SUBMIT THE CONTACT INFORMATION FOR, AND IF REQUIRED, PROVIDE THE QUALIFICATIONS OF, AN INDEPENDENT GEOTECHNICAL ENGINEERING FIRM QUALIFIED TO CONDUCT COMPACTION TESTING. THE MINIMUM COMPACTION TEST FREQUENCY SHALL BE ONCE EVERY 50 LINEAL FEET IN EACH BACKFILL TYPE, EXCEPT CLSM. ALL COSTS ASSOCIATED WITH SUCH TESTING AND POSSIBLE RETESTING OF FAILED AREAS OR AREAS THAT HAVE BEEN RE-EXCAVATED SUBSEQUENT TO INITIAL TESTING, SHALL BE BORNE BY THE CONTRACTOR. DOCUMENTATION OF TEST RESULTS SHALL BE SUBMITTED TO INSPECTOR WITHIN 24 HOURS OF TESTING.

4. A MINIMUM OF TWO WORKING DAYS ADVANCED NOTICE SHALL BE GIVEN TO THE CITY OF SANTA CRUZ WATER DEPARTMENT (SCWD) BEFORE CONSTRUCTION ON ANY PORTION OF THE WATER SYSTEM. A MINIMUM OF TWO WORKING DAYS WRITTEN NOTICE SHALL BE GIVEN TO ALL CUSTOMERS IN THE AREA OF CONSTRUCTION PRIOR TO COMMENCEMENT OF WORK. NOTIFICATION DOOR HANGERS WILL BE PROVIDED BY SCWD TO BE DISTRIBUTED BY THE CONTRACTOR.

5. A MINIMUM OF THREE WORKING DAYS ADVANCED NOTICE SHALL BE GIVEN TO THE SCWD IN ORDER TO SCHEDULE A SHUTDOWN OF THE SYSTEM. VALVES CONNECTED TO THE EXISTING SYSTEM SHALL BE OPERATED BY SCWD PERSONNEL ONLY. CONTRACTOR SHALL PRE-DIG SYSTEM CONNECTION LOCATIONS SUFFICIENTLY IN ADVANCE OF SCHEDULED SHUTDOWN TO VERIFY EXISTING CONDITIONS AND OBTAIN EXACT MATERIALS NEEDED TO COMPLETE THE CONNECTION IN ORDER TO REDUCE THE POSSIBILITY OF A PROLONGED OR FALSE SHUTDOWN. SCWD SHALL NOT BE HELD RESPONSIBLE FOR CONSTRUCTION DELAYS DUE TO INABILITY TO OBTAIN A COMPLETE SHUTDOWN.

6. THE CONTRACTOR SHALL PROVIDE ALL NECESSARY EQUIPMENT FOR PRESSURE AND LEAKAGE TESTING. SCWD WILL PROVIDE MATERIAL AND EQUIPMENT AND PERFORM THE INITIAL DISINFECTION AND WATER QUALITY TESTING OF THE PIPELINE. MAINLINE CHLORINATION MUST BE SCHEDULED FOR A MONDAY OR TUESDAY MORNING DUE TO LABORATORY TESTING CONSTRAINTS.

7. A SERVICE TO BE "RENEWED" SHALL CONSIST OF INSTALLING NEW COPPER SERVICE PIPE FROM THE NEW MAIN TO THE METER. A SERVICE TO BE "RECONNECTED" SHALL CONSIST OF CONNECTING NEW COPPER SERVICE PIPE FROM THE NEW MAIN TO THE EXISTING SERVICE LINE. UNDER NO CIRCUMSTANCE SHALL COPPER SERVICES BE CRIMPED AS A METHOD OF RECONNECTION.

8. NO EXISTING SERVICES SHALL BE RECONNECTED UNTIL THE NEW MAIN HAS BEEN FLUSHED, HYDROSTATICALLY TESTED, DISINFECTED, HAS PASSED ALL WATER QUALITY TESTING, AND HAS BEEN TIED INTO THE SYSTEM.

9. ALL VALVES AND FITTINGS (EXCEPT TRANSITION COUPLINGS AT SYSTEM CONNECTIONS) SHALL HAVE RESTRAINTS INCORPORATED INTO THE JOINTS AND FOR ALL OTHER JOINTS WITHIN A DISTANCE OF SUCH FITTING AS DEFINED BY STANDARD DETAIL #18.

10. MINIMUM SEPARATION FROM OTHER PARALLEL AND CROSSING UTILITIES SHALL BE MAINTAINED PER CALIFORNIA CODE OF REGULATIONS. IF CONDITIONS REQUIRE CONSTRUCTION AT CLEARANCES LESS THAN THOSE PRESCRIBED BY CALIFORNIA CODE, APPROVAL FROM THE CALIFORNIA DEPARTMENT OF PUBLIC HEALTH SHALL BE OBTAINED PRIOR TO PROCEEDING.

11. CONTRACTOR SHALL EXPOSE THE CORPORATION STOPS AND PROVIDE A MINIMUM OF TWO WORKING DAYS NOTICE TO SCWD TO SCHEDULE SHUTOFF AND INSPECTION OF EXISTING SERVICE LINES TO BE RETIRED ON A MAIN TO REMAIN IN SERVICE. CONTRACTOR SHALL REMOVE METER BOXES AND RESTORE SIDEWALK AND PAVING. SERVICE LINES SHALL NOT BE CRIMPED AS A METHOD OF RETIREMENT.

12. EXISTING VALVES TO BE RETIRED MUST HAVE OPEN/CLOSE STATUS BE CONFIRMED BY SCWD PRIOR TO THE VALVE BOX REMOVAL, THE HOLE BACKFILLED WITH SLURRY-CEMENT OR CONCRETE, AND PAVEMENT TO MATCH EXISTING.

13. EXACT FIRE HYDRANT LOCATIONS MUST BE APPROVED BY THE APPLICABLE FIRE DEPARTMENT, PUBLIC WORKS DEPARTMENT, AND SCWD PRIOR TO INSTALLATION.

14. UTILITY LOCATIONS SHOWN ARE APPROXIMATE AND EXISTING UTILITIES AND UNDERGROUND STRUCTURES MAY NOT BE SHOWN. LOCATION OF EXISTING UTILITIES IS THE RESPONSIBILITY OF THE CONTRACTOR AND SHALL BE VERIFIED PRIOR TO THE SAWCUT AND EXCAVATION FOR INSTALLATION OF THE NEW FACILITY TO CONFIRM CONSTRUCTABILITY IN THE PROPOSED ALIGNMENT. IF DURING THE COURSE OF WORK THE CONTRACTOR ENCOUNTERS ANY EXISTING UTILITIES OR OTHER CONFLICTING STRUCTURES THAT FORCE THE REALIGNMENT OF THE NEW PIPELINE AT A DIFFERENT GRADE, OR REQUIRE OTHER MINOR ALTERATIONS, SUCH RELAYING OR MINOR ALTERATIONS WILL BE MADE AT NO ADDITIONAL EXPENSE TO THE CITY. CALL UNDERGROUND SERVICE ALERT AT LEAST TWO WORKING DAYS BEFORE DIGGING AT 811/(800) 227-2600. ALWAYS CONFIRM STATUS AND SAFETY OF SUSPECTED ABANDONED FACILITIES PRIOR TO REMOVAL.

15. SHOULD ANY UTILITY OR PROPERTY BE DAMAGED BY THE OPERATIONS OF THE CONTRACTOR, IMMEDIATELY NOTIFY THE OWNER AND THE WATER DEPARTMENT. ANY NON-PRESSURIZED SEWER OR DRAINAGE PIPELINES OR ABANDONED FACILITIES ARE NOT REQUIRED TO BE MARKED. DAMAGE TO NON-PRESSURIZED SEWER OR DRAINAGE PIPELINES DURING THE COURSE OF WORK IS SOLELY THE RESPONSIBILITY OF THE CONTRACTOR.

16. THE CONTRACTOR SHALL KEEP THE CONSTRUCTION SITE IN A NEAT AND CLEAN CONDITION AT ALL TIMES. ALL TRASH AND EXCESS EXCAVATED MATERIAL SHALL BE REMOVED FROM THE SITE AS NEEDED AND AT THE END OF EACH WORK DAY. STREET AREAS SHALL BE SWEPT AS NEEDED AND AT THE END OF EACH WORK DAY. IF DUST PROBLEMS SHOULD OCCUR, DUST CONTROL SHALL BE PROVIDED BY THE CONTRACTOR AT CONTRACTOR'S EXPENSE AND TO THE SATISFACTION OF THE SCWD AND OTHER REGULATORY AGENCIES.

17. CONTRACTOR SHALL KEEP ON SITE AND READY AT ALL TIMES DURING CONSTRUCTION ALL EQUIPMENT AND MATERIALS NEEDED TO BE IMPLEMENTED TO ENSURE THE PROTECTION OF ALL SURFACE WATER BODIES AND SEWER AND STORM DRAIN SYSTEMS FROM RUNOFF WHICH MAY BE CONTAMINATED BY SEDIMENT, SAWCUT SLURRY OR OTHER POLLUTION IN THE EVENT OF EMERGENCY WATER FACILITY BREAKAGE, TRENCH DEWATERING ACTIVITY, OR WET WEATHER EVENT THAT MAY ERODE STOCKPILES OR EXPOSED SOIL AREAS.

18. APPROVAL BY THE CITY OF SANTA CRUZ WATER DEPARTMENT FOR THE FIRE SERVICE INSTALLATION SHALL ONLY BE FOR THE SERVICE LINE LOCATION AND THE CONNECTION TO THE CITY WATER SYSTEM. THE FIRE SERVICE SIZE AND DESIGN APPROVAL ARE THE RESPONSIBILITY OF THE LOCAL FIRE PROTECTION AGENCY.

19. CONTRACTOR SHALL COMPLY WITH ALL CURRENT FEDERAL, STATE AND LOCAL LAWS, STANDARDS, AND REGULATORY AGENCY REQUIREMENTS CONCERNING THE HANDLING OF ASBESTOS CONTAINING MATERIALS. CONTRACTOR SHALL SUBMIT A COPY OF ALL RELEVANT CAL/OSHA DOCUMENTATION AND DOCUMENTED WORKER TRAINING TO CITY PRIOR TO HANDLING ANY ASBESTOS CONTAINING MATERIALS. ASBESTOS DISTURBANCE AND/OR REMOVAL ACTIVITIES SHALL BE CONDUCTED BY PROPERLY TRAINED, ACCREDITED, AND LICENSED PERSONNEL USING PROPER PROTECTIVE EQUIPMENT. TRANSITE PIPE SHALL BE CUT ONLY WITH A SNAP TYPE CUTTER IN A POSTED REGULATED AREA AND NEVER WITH AN ABRASIVE SAW. FIELD CUT TRANSITE PIPE ENDS SHALL NOT BE RE-BEVELED. REMOVE ALL DISTURBED ASBESTOS-CONTAINING MATERIALS AS INTACT AS POSSIBLE AND IMMEDIATELY SEAL IN LEAK-TIGHT SIX MIL THICK POLY WRAP WITH PROPER LABELING. CONTRACTOR SHALL SUBMIT A COPY OF THE NON-HAZARDOUS WASTE MANIFEST TO CITY TO DOCUMENT PROPER DISPOSAL.

100% SUBMITTAL
NOT FOR CONSTRUCTION

NOTE:
THE CONTRACTOR SHALL VERIFY ALL CONTROLLING FIELD DIMENSIONS BEFORE ORDERING OR FABRICATING ANY MATERIAL.

W-1

REGISTERED PROFESSIONAL ENGINEER
JUSTIN L. CONKLIN
No. 81159
Exp. 12-30-23
CIVIL
STATE OF CALIFORNIA

REGISTERED ENGINEER – CIVIL

TRC Engineers or its officers or agents shall not be responsible for the accuracy or completeness of electronic copies of this plan sheet

CITY OF SANTA CRUZ

PREPARED FOR THE
CITY OF SANTA CRUZ
PUBLIC WORKS DEPARTMENT

DESIGN	BY A. BEDAL	CHECKED J. CONKLIN	
DETAILS	BY A. BEDAL	CHECKED J. CONKLIN	
QUANTITIES	BY	CHECKED	
ORIGINAL SCALE IN INCHES FOR REDUCED PLANS	0 1 2 3		

TRC
MARK IMBRIANI
PROJECT MANAGER

BRIDGE NO. 36C0108
CONTRACT NO.
EA NO.

MURRAY STREET BRIDGE
SEISMIC RETROFIT AND BARRIER REPLACEMEN
WATERLINE STANDARD CONSTRUCTION NOTES

DISREGARD PRINTS BEARING EARLIER REVISION DATES
REVISION DATES (PRELIMINARY STAGE ONLY)

SCALE NONE
SHEET 31 OF 167
VAULT NO. XXXXXXX

Drawing name: H:\1161 - Santa Cruz\Road\Sheets\027-Waterline Plans.dwg Layout Tab: W-1 Aug 26,2021 - 4:28pm MBeem

ACP – ASBESTOS CEMENT PIPE
DIP – DUCTILE IRON PIPE
FL – FULL LENGTH
RL – RESTRAINED LENGTH
SSFM – SANITARY SEWER FORCE MAIN
~~~~~~ – REMOVE PIPE

NOTES:

1. EXISTING UTILITY ELEVATION AND/OR LOCATION UNKNOWN AND TO BE FIELD VERIFIED. ADJUST WATERLINE AS NECESSARY TO AVOID CONFLICT WITH Exist UTILITIES.
2. INSTALL SERVICE CONNECTION PER CITY OF SANTA CRUZ WATER SYSTEM STANDARD DETAIL 1.
3. GATE VALVE INSTALLATION PER CITY OF SANTA CRUZ WATER SYSTEM STANDARD DETAIL 11.
4. INSTALL THRUST BLOCK PER CITY OF SANTA CRUZ WATER SYSTEM STANDARD DETAIL 19.
5. FOR RESTRAINED LENGTH DETAILS NOT SHOWN SEE JOINT RESTRAINT INSTALLATION PER CITY OF SANTA CRUZ WATER SYSTEM STANDARD DETAIL 18.
6. FOR TRENCH DETAILS NOT SHOWN SEE STANDARD WATER MAIN TRENCH PER CITY OF SANTA CRUZ WATER SYSTEM STANDARD DETAIL 15.
7. WHEN 3' MINIMUM COVER CANNOT BE ACHIEVED SEE SUB-STANDARD WATER MAIN TRENCH PER CITY OF SANTA CRUZ WATER SYSTEM STANDARD DETAIL 16.

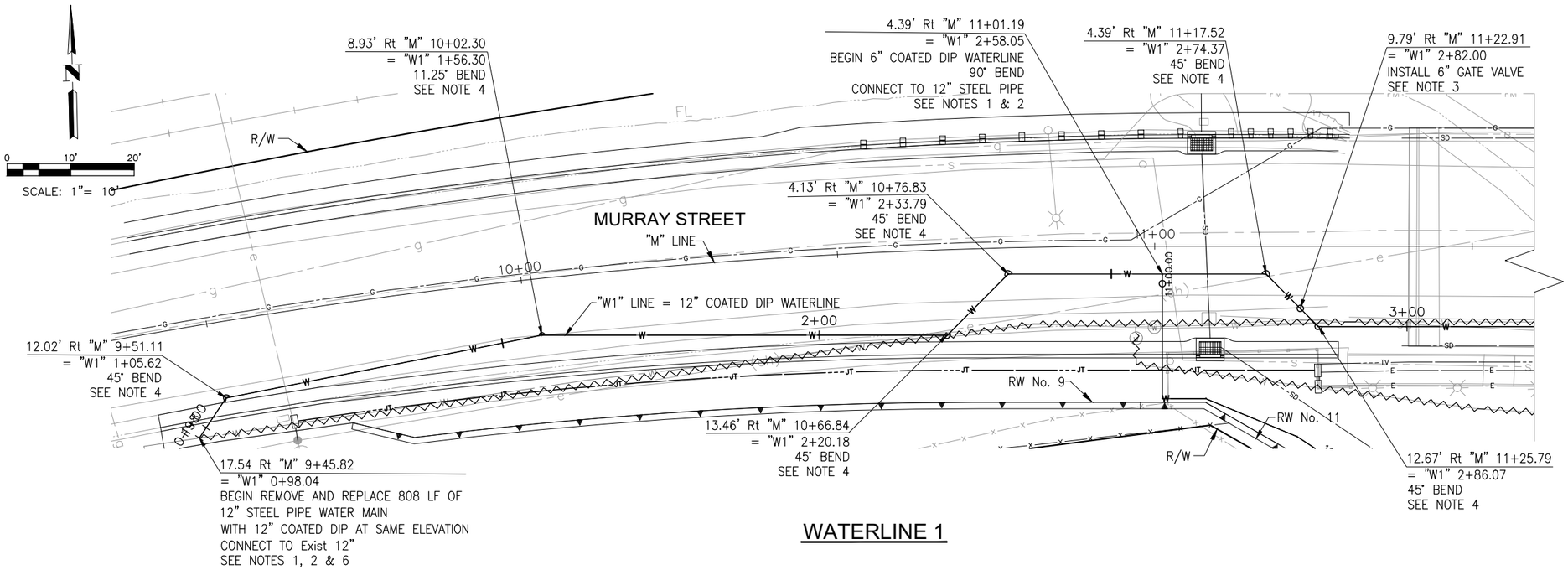

WATERLINE 1

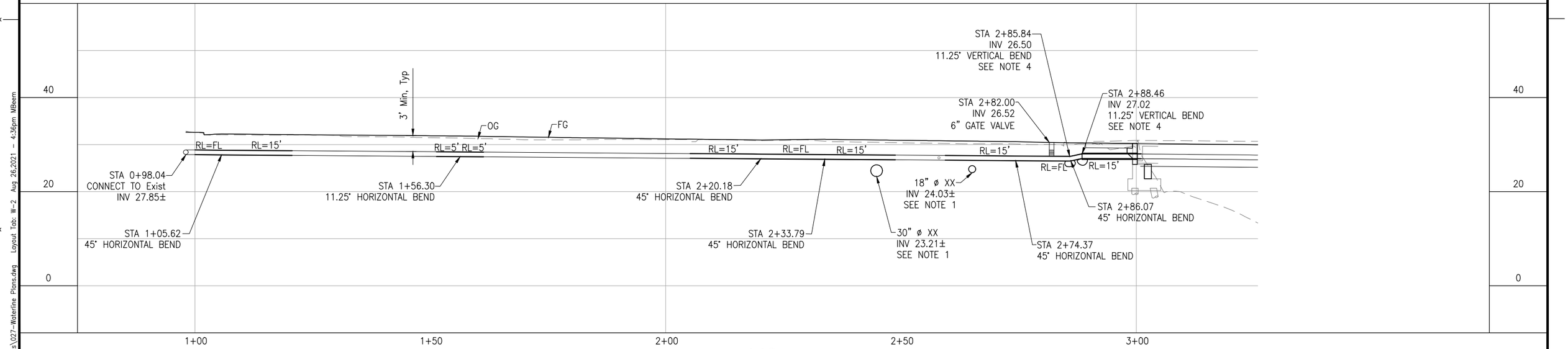

PROFILE
"W1" LINE
1"=10'

100% SUBMITTAL
NOT FOR CONSTRUCTION

NOTE:
THE CONTRACTOR SHALL VERIFY ALL CONTROLLING FIELD DIMENSIONS BEFORE ORDERING OR FABRICATING ANY MATERIAL.

W-2

REGISTERED PROFESSIONAL ENGINEER
JUSTIN L. CONKLIN
No. 5[illegible]
12-30-23
CIVIL
STATE OF CALIFORNIA

REGISTERED ENGINEER – CIVIL

TRC Engineers or its officers or agents shall not be responsible for the accuracy or completeness of electronic copies of this plan sheet

CITY OF SANTA CRUZ

PREPARED FOR THE
CITY OF SANTA CRUZ
PUBLIC WORKS DEPARTMENT

DESIGN	BY A. BEDAL	CHECKED J. CONKLIN	
DETAILS	BY D. LOR	CHECKED J. CONKLIN	
QUANTITIES	BY	CHECKED	
ORIGINAL SCALE IN INCHES FOR REDUCED PLANS	0 1 2 3		

TRC
MARK IMBRIANI
PROJECT MANAGER

BRIDGE NO. 36C0108
CONTRACT NO.
EA NO.

MURRAY STREET BRIDGE
SEISMIC RETROFIT AND BARRIER REPLACEMEN
WATERLINE PLAN AND PROFILE

DISREGARD PRINTS BEARING EARLIER REVISION DATES
REVISION DATES (PRELIMINARY STAGE ONLY)

SCALE 1"=10'
SHEET 32 OF 167
VAULT NO. XXXXXXX

Drawing name: H:\1161 – Santa Cruz\Road\Sheets\027-Waterline Plans.dwg Layout Tab: W-2 Aug 26,2021 – 4:36pm MBeem
~~~~~~

ACP – ASBESTOS CEMENT PIPE
DIP – DUCTILE IRON PIPE
FL – FULL LENGTH
RL – RESTRAINED LENGTH
SSFM – SANITARY SEWER FORCE MAIN
~~~~ – REMOVE PIPE

NOTES:

1. EXISTING UTILITY ELEVATION AND/OR LOCATION UNKNOWN AND TO BE FIELD VERIFIED. ADJUST WATERLINE AS NECESSARY TO AVOID CONFLICT WITH Exist UTILITIES.
2. INSTALL SERVICE CONNECTION PER CITY OF SANTA CRUZ WATER SYSTEM STANDARD DETAIL 1.
3. GATE VALVE INSTALLATION PER CITY OF SANTA CRUZ WATER SYSTEM STANDARD DETAIL 11.
4. INSTALL THRUST BLOCK PER CITY OF SANTA CRUZ WATER SYSTEM STANDARD DETAIL 19.
5. FOR RESTRAINED LENGTH DETAILS NOT SHOWN SEE JOINT RESTRAINT INSTALLATION PER CITY OF SANTA CRUZ WATER SYSTEM STANDARD DETAIL 18.
6. FOR TRENCH DETAILS NOT SHOWN SEE STANDARD WATER MAIN TRENCH PER CITY OF SANTA CRUZ WATER SYSTEM STANDARD DETAIL 15.
7. WHEN 3' MINIMUM COVER CANNOT BE ACHIEVED SEE SUB-STANDARD WATER MAIN TRENCH PER CITY OF SANTA CRUZ WATER SYSTEM STANDARD DETAIL 16.

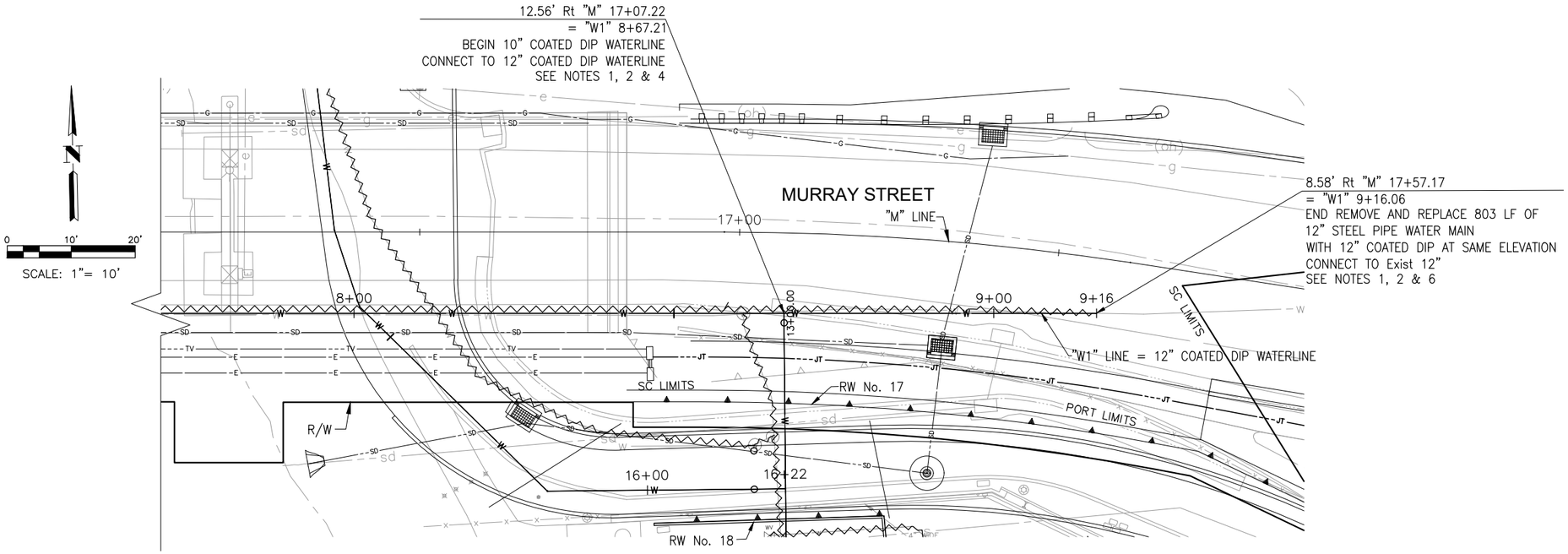

WATERLINE 1

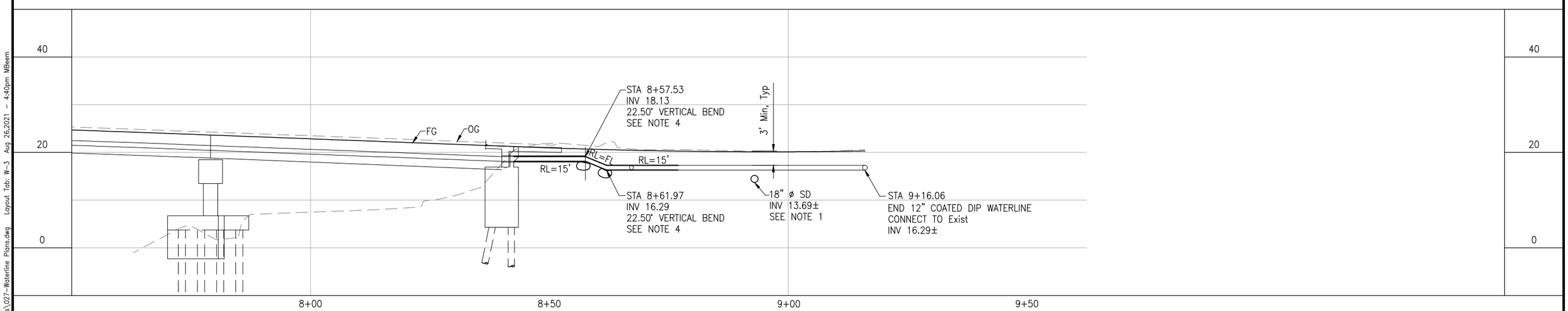

PROFILE
"W1" LINE
1"=10'

100% SUBMITTAL
NOT FOR CONSTRUCTION

NOTE:
THE CONTRACTOR SHALL VERIFY ALL CONTROLLING FIELD DIMENSIONS BEFORE ORDERING OR FABRICATING ANY MATERIAL.

W-3

REGISTERED PROFESSIONAL ENGINEER JUSTIN L. CONKLIN No. 5[illegible] 6-30-23 CIVIL STATE OF CALIFORNIA

REGISTERED ENGINEER – CIVIL

TRC Engineers or its officers or agents shall not be responsible for the accuracy or completeness of electronic copies of this plan sheet

CITY OF SANTA CRUZ

PREPARED FOR THE
CITY OF SANTA CRUZ
PUBLIC WORKS DEPARTMENT

	BY	CHECKED
DESIGN	A. BEDAL	J. CONKLIN
DETAILS	D. LOR	J. CONKLIN
QUANTITIES		

ORIGINAL SCALE IN INCHES FOR REDUCED PLANS 0 1 2 3

TRC
MARK IMBRIANI
PROJECT MANAGER

BRIDGE NO. 36C0108
CONTRACT NO.
EA NO.

MURRAY STREET BRIDGE
SEISMIC RETROFIT AND BARRIER REPLACEMEN
WATERLINE PLAN AND PROFILE

DISREGARD PRINTS BEARING EARLIER REVISION DATES
REVISION DATES (PRELIMINARY STAGE ONLY)

SCALE 1"=10'
SHEET 33 OF 167
VAULT NO. XXXXXXX

Drawing name: H:\1161 – Santa Cruz\Road\Sheets\027-Waterline Plans.dwg Layout Tab: W-3 Aug 26,2021 – 4:40pm MBeem
~~~~

ACP – ASBESTOS CEMENT PIPE
DIP – DUCTILE IRON PIPE
FL – FULL LENGTH
RL – RESTRAINED LENGTH
SSFM – SANITARY SEWER FORCE MAIN
WATERLINE

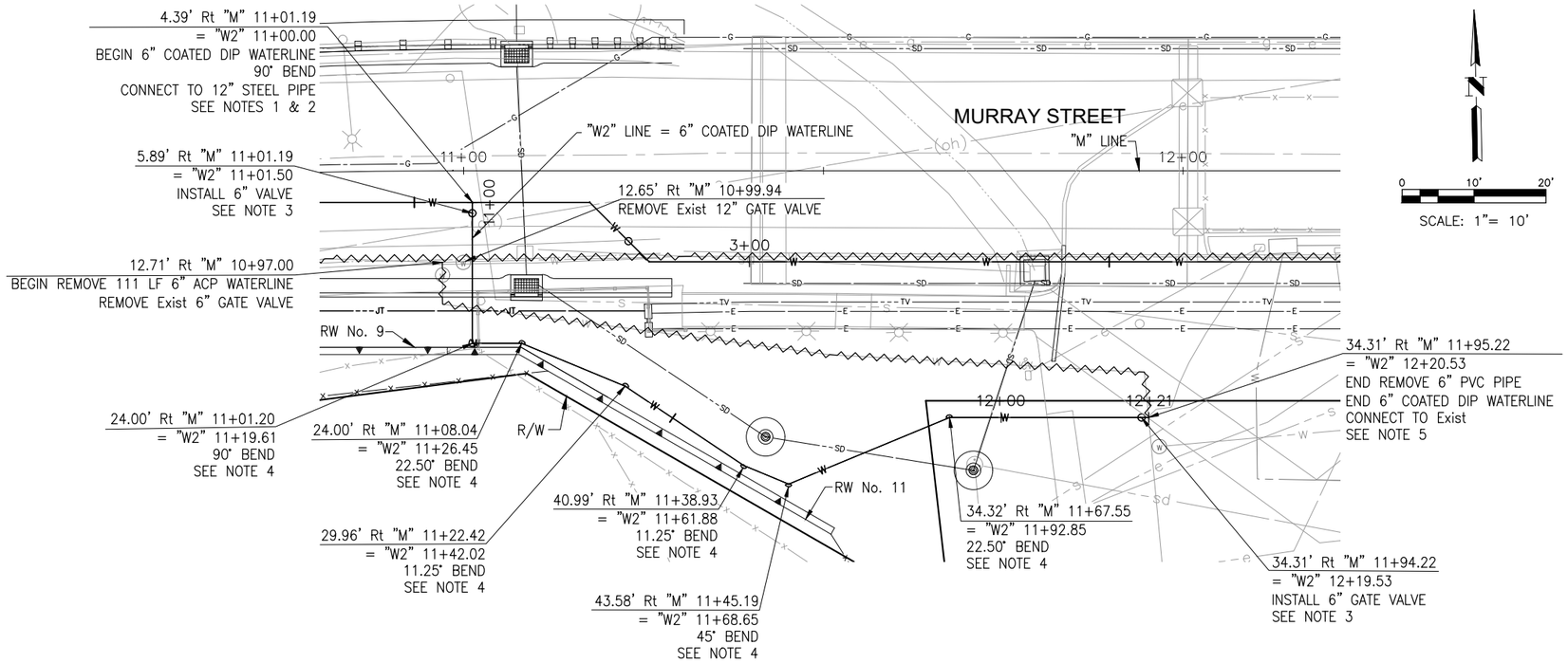

WATERLINE 2

NOTES:

1. EXISTING UTILITY ELEVATION AND/OR LOCATION UNKNOWN AND TO BE FIELD VERIFIED. ADJUST WATERLINE AS NECESSARY TO AVOID CONFLICT WITH Exist UTILITIES.
2. INSTALL SERVICE CONNECTION PER CITY OF SANTA CRUZ WATER SYSTEM STANDARD DETAIL 1.
3. GATE VALVE INSTALLATION PER CITY OF SANTA CRUZ WATER SYSTEM STANDARD DETAIL 11.
4. INSTALL THRUST BLOCK PER CITY OF SANTA CRUZ WATER SYSTEM STANDARD DETAIL 19.
5. FOR RESTRAINED LENGTH DETAILS NOT SHOWN SEE JOINT RESTRAINT INSTALLATION PER CITY OF SANTA CRUZ WATER SYSTEM STANDARD DETAIL 18.
6. FOR TRENCH DETAILS NOT SHOWN SEE STANDARD WATER MAIN TRENCH PER CITY OF SANTA CRUZ WATER SYSTEM STANDARD DETAIL 15.
7. WHEN 3' MINIMUM COVER CANNOT BE ACHIEVED SEE SUB-STANDARD WATER MAIN TRENCH PER CITY OF SANTA CRUZ WATER SYSTEM STANDARD DETAIL 16.

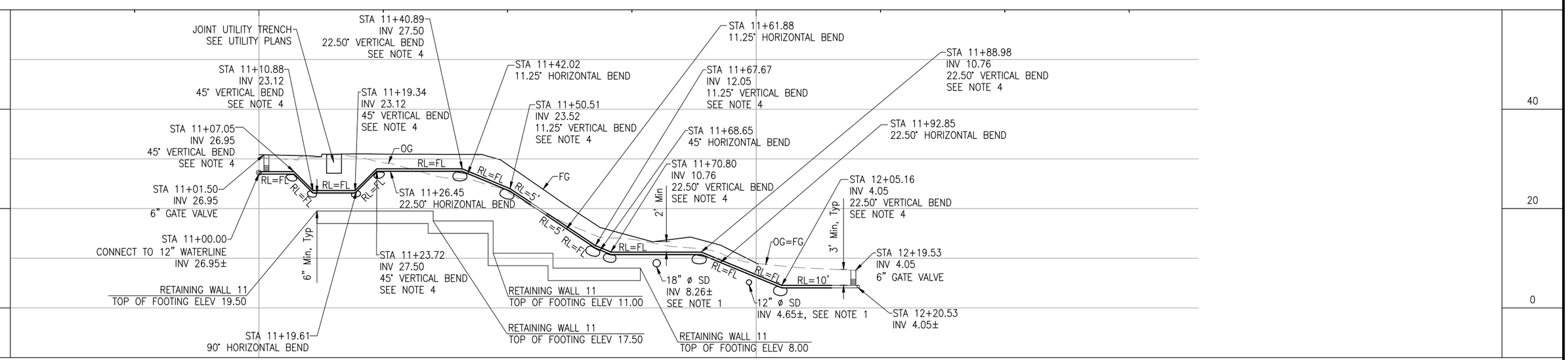

PROFILE
"W2" LINE
1"=10'

100% SUBMITTAL
NOT FOR CONSTRUCTION

NOTE:
THE CONTRACTOR SHALL VERIFY ALL CONTROLLING FIELD DIMENSIONS BEFORE ORDERING OR FABRICATING ANY MATERIAL.

W-4

REGISTERED PROFESSIONAL ENGINEER JUSTIN L. CONKLIN No. 76130 CIVIL STATE OF CALIFORNIA
REGISTERED ENGINEER – CIVIL
TRC Engineers or its officers or agents shall not be responsible for the accuracy or completeness of electronic copies of this plan sheet

CITY OF SANTA CRUZ
PREPARED FOR THE
CITY OF SANTA CRUZ
PUBLIC WORKS DEPARTMENT

DESIGN	BY A. BEDAL	CHECKED J. CONKLIN	
DETAILS	BY D. LOR	CHECKED J. CONKLIN	
QUANTITIES	BY	CHECKED	
ORIGINAL SCALE IN INCHES FOR REDUCED PLANS	0 1 2 3		

TRC
MARK IMBRIANI
PROJECT MANAGER

BRIDGE NO. 36C0108
CONTRACT NO.
EA NO.

MURRAY STREET BRIDGE
SEISMIC RETROFIT AND BARRIER REPLACEMEN
WATERLINE PLAN AND PROFILE

DISREGARD PRINTS BEARING EARLIER REVISION DATES
REVISION DATES (PRELIMINARY STAGE ONLY)

SCALE 1"=10'
SHEET 34 OF 167
VAULT NO. XXXXXXX

Drawing name: H:\1161 – Santa Cruz\Road\Sheets\027-Waterline Plans_1_1096_08o4od3b.sv$.dwg Layout Tab: W-4 Aug 26,2021 – 4:44pm MBeen

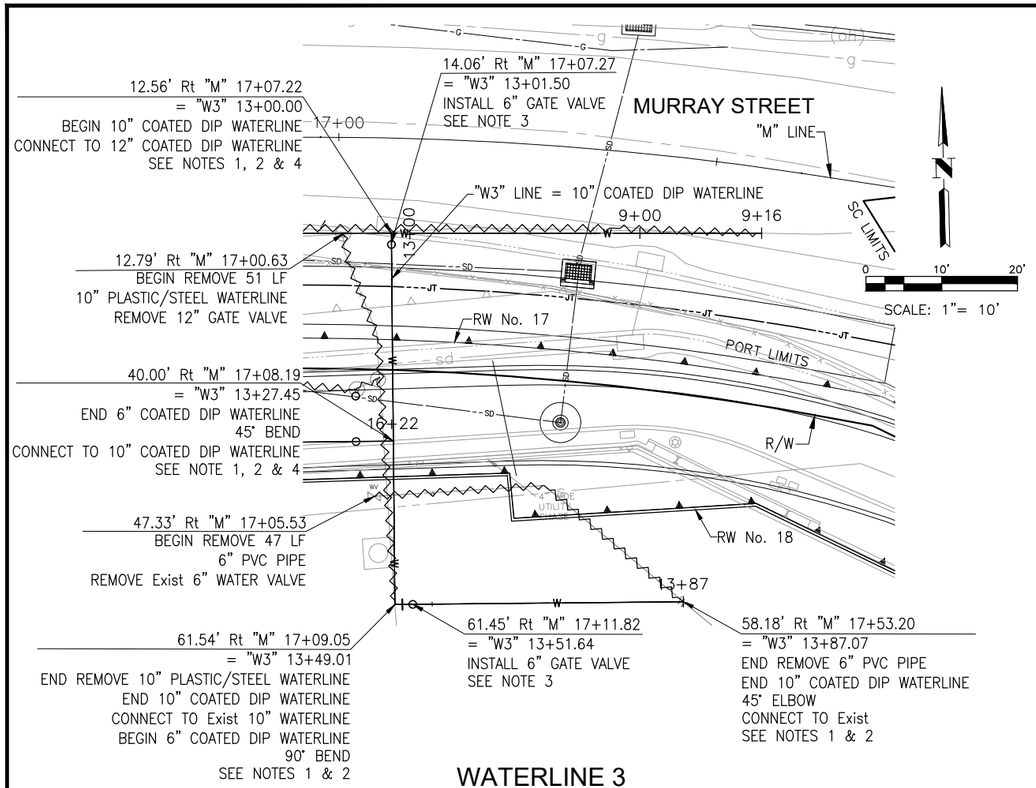

WATERLINE 3

ACP – ASBESTOS CEMENT PIPE
DIP – DUCTILE IRON PIPE
FL – FULL LENGTH
RL – RESTRAINED LENGTH
SSFM – SANITARY SEWER FORCE MAIN
~~~~~~ – REMOVE PIPE

NOTES:

1. EXISTING UTILITY ELEVATION AND/OR LOCATION UNKNOWN AND TO BE FIELD VERIFIED. ADJUST WATERLINE AS NECESSARY TO AVOID CONFLICT WITH Exist UTILITIES.
2. INSTALL SERVICE CONNECTION PER CITY OF SANTA CRUZ WATER SYSTEM STANDARD DETAIL 1.
3. GATE VALVE INSTALLATION PER CITY OF SANTA CRUZ WATER SYSTEM STANDARD DETAIL 11.
4. INSTALL THRUST BLOCK PER CITY OF SANTA CRUZ WATER SYSTEM STANDARD DETAIL 19.
5. FOR RESTRAINED LENGTH DETAILS NOT SHOWN SEE JOINT RESTRAINT INSTALLATION PER CITY OF SANTA CRUZ WATER SYSTEM STANDARD DETAIL 18.
6. FOR TRENCH DETAILS NOT SHOWN SEE STANDARD WATER MAIN TRENCH PER CITY OF SANTA CRUZ WATER SYSTEM STANDARD DETAIL 15.
7. WHEN 3' MINIMUM COVER CANNOT BE ACHIEVED SEE SUB-STANDARD WATER MAIN TRENCH PER CITY OF SANTA CRUZ WATER SYSTEM STANDARD DETAIL 16.

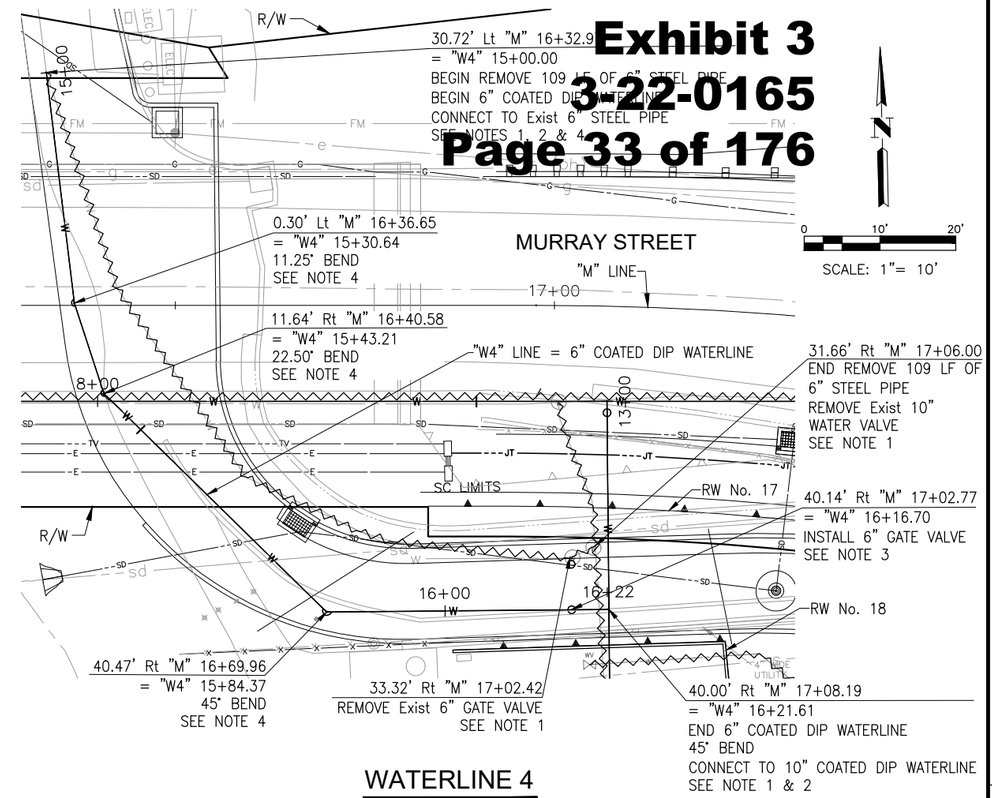

WATERLINE 4

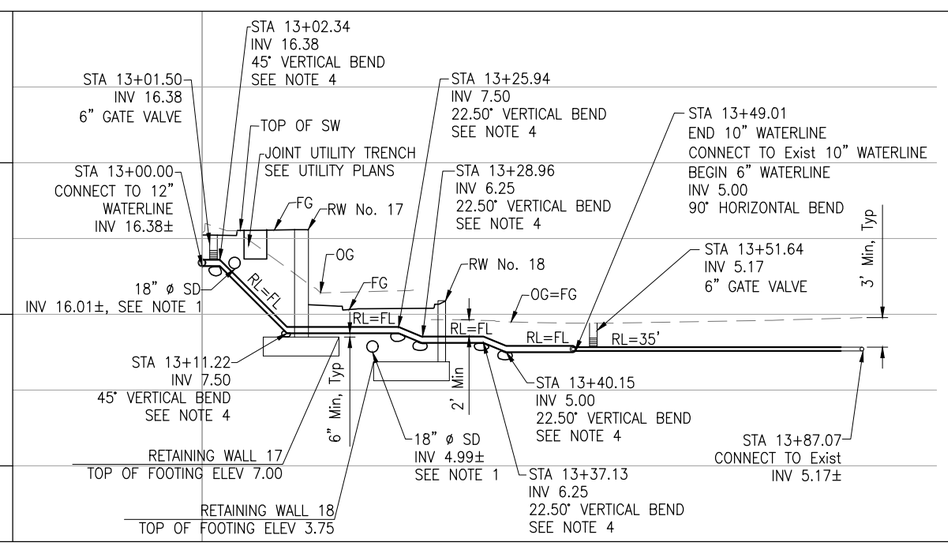

PROFILE
"W3" LINE
1"=10'

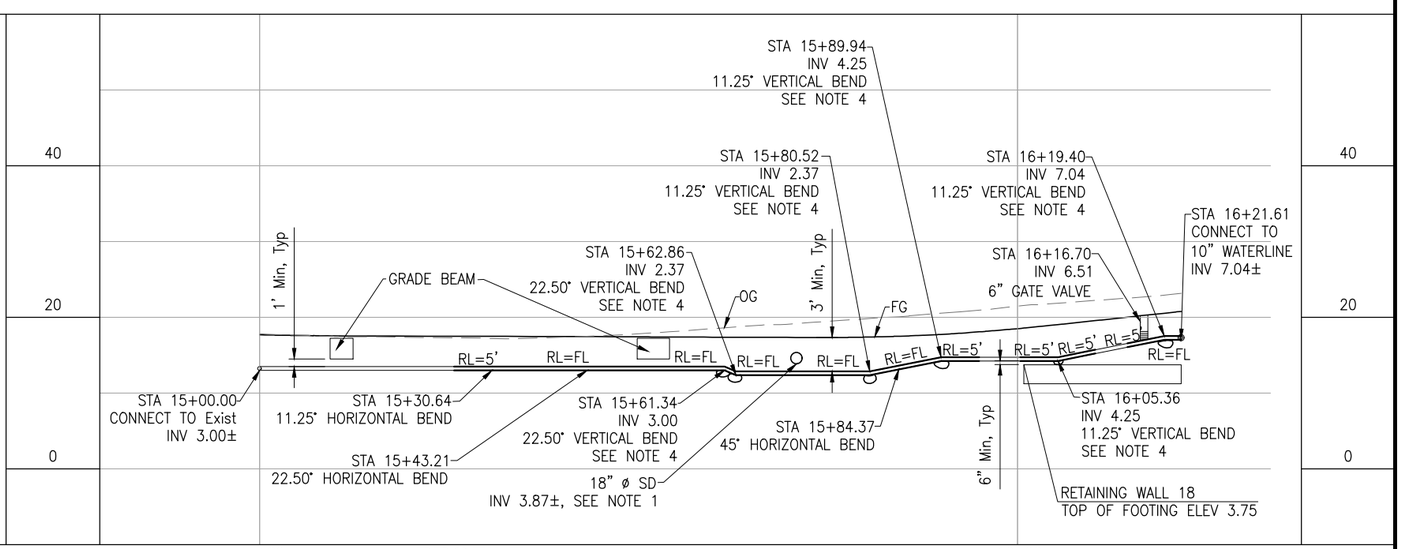

PROFILE
"W4" LINE
1"=10'

100% SUBMITTAL NOT FOR CONSTRUCTION

NOTE:
THE CONTRACTOR SHALL VERIFY ALL CONTROLLING FIELD DIMENSIONS BEFORE ORDERING OR FABRICATING ANY MATERIAL.

W-5

REGISTERED PROFESSIONAL ENGINEER JUSTIN L. CONKLIN No. 6[illegible] 6-30-23 CIVIL STATE OF CALIFORNIA

REGISTERED ENGINEER – CIVIL

TRC Engineers or its officers or agents shall not be responsible for the accuracy or completeness of electronic copies of this plan sheet

CITY OF SANTA CRUZ

PREPARED FOR THE
CITY OF SANTA CRUZ
PUBLIC WORKS DEPARTMENT

	BY	CHECKED
DESIGN	A. BEDAL	J. CONKLIN
DETAILS	D. LOR	J. CONKLIN
QUANTITIES		

ORIGINAL SCALE IN INCHES FOR REDUCED PLANS 0 1 2 3

TRC
MARK IMBRIANI
PROJECT MANAGER

BRIDGE NO. 36C0108
CONTRACT NO.
EA NO.

MURRAY STREET BRIDGE
SEISMIC RETROFIT AND BARRIER REPLACEMEN
WATERLINE PLAN AND PROFILE

DISREGARD PRINTS BEARING EARLIER REVISION DATES
REVISION DATES (PRELIMINARY STAGE ONLY)

SCALE 1"=10'
SHEET 35 OF 167
VAULT NO. XXXXXXX

Drawing name: H:\1161 – Santa Cruz\Road\Sheets\027-Waterline Plans_1_1096_08a4ad3b.sv$.dwg Layout Tab: W-5 Aug 26,2021 – 4:45pm MBeem
~~~~~~

SCCSD GENERAL CONSTRUCTION NOTES

1. ALL CONSTRUCTION SHALL CONFORM TO THE FOLLOWING:
   - 1.1. MOST CURRENT EDITION OF THE COUNTY OF SANTA CRUZ COUNTY DESIGN CRITERIA
   - 1.2. 2018 STATE STANDARD PLANS AND THE APPLICABLE PROVISIONS OF THE 2018 STATE STANDARD SPECIFICATIONS
   - 1.3. PROJECT SPECIAL PROVISIONS
   - 1.4. PROJECT GEOTECHNICAL REPORT, TITLED "EAST CLIFF TRANSMISSION MAIN RELOCATION AT MURRAY STREET BRIDGE SANTA CRUZ, CALIFORNIA" BY CRAWFORD & ASSOCIATES, INC. AND TABER, DATED SEPTEMBER 8, 2019.
2. NO CHANGES TO THE APPROVED PROJECT PLANS SHALL BE MADE WITHOUT PRIOR APPROVAL OF THE ENGINEER.
3. LOCATION OF THE UNDERGROUND UTILITIES ON THE PLANS ARE APPROXIMATE ONLY. CALL "UNDERGROUND SERVICE ALERT" (USA) AT 800-642-2444 AT LEAST 48 HOURS BEFORE DIGGING.
4. IT IS THE CONTRACTOR'S RESPONSIBILITY TO VERIFY THE LOCATIONS AND DEPTHS OF THE EXISTING UTILITIES PRIOR TO CONSTRUCTION AND TO NOTIFY THE ENGINEER IN CASE OF CONFLICT. IT SHALL BE THE CONTRACTOR'S RESPONSIBILITY TO PROTECT ALL EXISTING UTILITIES AND STRUCTURES FOUND AT THE SITE, NOT CALLED TO BE ABANDONED OR REMOVED.
5. ALL AREAS DISTURBED BY CONSTRUCTION ACTIVITIES SHALL BE RESTORED TO THE PRE-CONSTRUCTION CONDITION BY THE CONTRACTOR AT THE CONTRACTOR'S EXPENSE.
6. REFER TO DRAWING SS-3 FOR GENERAL SEQUENCING REQUIREMENTS. PHASE 1 OF THE SEWER FORCE MAIN BYPASS MUST BE READY TO GO ONLINE PRIOR TO THE ABANDONMENT OF THE EXISTING SEWER FORCE MAIN AND ASSOCIATED PIPING.
7. THE CONTRACTOR SHALL COORDINATE WITH THE DISTRICT TO IDENTIFY EXPECTED TIMES FOR LOW FLOW CONDITIONS AND PRESENT A SCHEDULE AND PLAN TO THE DISTRICT FOR REVIEW AND WRITTEN APPROVAL PRIOR TO SHUT DOWN OF THE EXISTING SEWER FORCE MAIN FOR ANY DURATION.
8. THE CONTRACTOR SHALL COORDINATE WITH THE DISTRICT FOR THE DISCONNECTION OF THE EXISTING SEWER FORCE MAIN.
9. THE CONTRACTOR SHALL POSSESS A CLASS "A" CONTRACTOR'S LICENSE AT THE TIME OF BID.
10. FIELD SURVEY DATA SHOWN IS BASED ON A TOPOGRAPHIC SURVEY PERFORMED BY BESS UTILITY SOLUTIONS IN JULY 2019. DATUM IS NAD 83 CALIFORNIA STATE PLANES ZONE III. CONTROL POINTS ARE DEFINED ON DRAWING SS-2.
11. MAINTAIN A MINIMUM OF TEN (10) FEET HORIZONTAL AND TWELVE (12) INCHES VERTICAL SEPARATION BETWEEN WATER AND SANITARY OR STORM SEWER MAINS AND SERVICES. SANITARY AND STORM SEWER PIPE JOINTS SHALL BE PLACED AT LEAST NINE (9) FEET FROM ANY WATERLINE CROSSING.
12. MAINTAIN A MIMIMUM OF 36-INCHES OF VERTICAL SEPARATION BETWEEN ANY STORM SEWER (STORM DRAIN OR FOOTING DRAIN) AND WATERLINE (MAINS OR SERVICES) OR SANITARY SEWER (MAINS OR SERVICES). IF 36-INCHES CANNOT BE MAINTAINED, PROVIDE A MINIMUM OF 4-INCH THICK INSULATION.
13. ALL WATER/SEWER PIPE INSULATION SHALL BE RIGID BOARD, HIGH DENSITY EXTRUDED POLYSTYRENE, MIN. 60 P.S.I., FOR UNDERGROUND INSTALLATIONS EQUIVALENT TO R-20 PER FOUR (4) INCH THICK INSULATION.
14. CONTRACTOR SHALL VERIFY AND RECORD THE HORIZONTAL AND VERTICAL LOCATIONS OF ALL UTILITIES ENCOUNTERED IN THE FIELD AND RECORD ANY CHANGES ON THE CONTRACTOR RECORD DRAWINGS.
15. THE CONTRACTOR SHALL RESTORE ALL DISTURBED PROPERTY, INCLUDING DRAINAGE SWALES, DISTURBED BY CONTRACT ACTIVITIES TO PRECONSTRUCTION CONDITION OR AS INDICATED ON THE PLANS.
16. IN CASE OF CONFLICT BETWEEN STATIONING OR DIMENSIONED LOCATION OF PIPE OR FITTINGS, USE DIMENSIONED LOCATIONS.
17. CONTRACTOR SHALL FIELD INSTALL RESTRAINED FITTINGS ON ALL MECHANICAL JOINTS.
18. THE CONTRACTOR SHALL BE RESPONSIBLE FOR EROSION AND SEDIMENT CONTROLS AS NECESSARY TO COMPLY WITH FEDERAL, STATE, AND MUNICIPAL LAWS THAT PROHIBIT UNPERMITTED DISCHARGE OF POLLUTANTS, INCLUDING SEDIMENTS, THAT ARE A RESULT OF EROSION AND OTHER CONSTRUCTION ACTIVITIES. THE CONTRACTOR SHALL CONDUCT ALL WORK SO SEDIMENT IS NOT TRANSPORTED ONTO THE ROADWAY OR ADJACENT PROPERTY.AT A MINIMUM, THE CONTRACTOR SHALL SWEEP UP ANY SEDIMENT TRACKED ONTO PAVED SURFACES IN PUBLIC RIGHT-OF-WAY WITHIN 24 HOURS OF THE TRACKING TO MINIMIZE THE WASH-OFF OF SEDIMENT INTO THE STORM DRAINS OR WATER WAYS.
19. THE CONTRACT REQUIRES THE CONTRACTOR PROVIDE ALL LABOR AND MATERIALS NEEDED TO PROVIDE A COMPLETE AND FUNCTIONAL PROJECT CONSISTENT WITH THE DRAWINGS AND SPECIFICATIONS CAPABLE OF PERFORMING AS SPECIFIED.

SANITARY SEWER CONSTRUCTION NOTES

1. ALL MANHOLES SHALL HAVE A MIMIMUM OF ONE-SIX (6") INCH GRADE RING. MAXIMUM GRADE RING ADJUSTMENT SHALL NOT EXCEED EIGHTEEN (18") INCHES.
2. SEWER MAIN AND SERVICE TRENCHES AND BEDDING SHALL BE COMPACTED TO A MINIMUM OF 95% OF MAXIMUM DENSITY.
3. UNLESS OTHERWISE NOTED, ALL BURIED SEWER PIPELINES SHALL BE C200 STEEL WITH CEMENT-MORTAR COATING AND LINING. ALL JOINTS MUST BE DOUBLE WELDED-BUTT JOINT FOR THE CASING AND CARRIER PIPE. FITTINGS SHALL BE FUSION BONDED EPOXY LINED AND COATED IN ACCORDANCE WITH THE SPECIFICATIONS.

DESIGN LOADS

1. PIPELINE MAINTENANCE LL = 100 PSF
2. WIND LOADS
   BASIC WIND SPEED (3 SEC GUST) = 135 MPH
   RISK CATEGORY = III
   WIND EXPOSURE = B

SEISMIC LOAD
RISK CATEGORY = III
DESIGN CATEGORY D
SOIL SITE CLASS D
IMPORTANCE FACTOR = IE = 1.25
SPECTRAL RESPONSE ACCELERATIONS
SS = 1.50 SDS = 1.00
S1 =0.685 SD1 = 0.685
ANALYSIS PROCEDURE: EQUIVALENT LATERAL FORCE PROCEDURE

CONCRETE

1. ALL STRUCTURAL CONCRETE UNLESS OTHERWISE NOTED SHALL HAVE A DENSITY OF 150 PCF. AGGREGATES SHALL CONFORM TO ASTM C33 WITH PROVEN SHRINKAGE CHARACTERISTICS OF LESS THAN 0.05%.
2. ALL CONCRETE SHALL DEVELOP MINIMUM COMPRESSIVE STRENGTHS AT THE END OF 28 DAYS AS FOLLOWS:

USE	STRENGTH (psi)	MAX SLUMP	MAX W/C RATIO	MAX AGGREGATE SIZE	MIN CEMENT CONTENT
VAULTS	4500	3 INCH	0.45	1.00"	5.25 SACK/YD

3. ALL CEMENT SHALL CONFORM TO ASTM C150 TYPE I OR II.
4. CONCRETE MIX DESIGNS SHALL BE PREPARED BY AN INDEPENDENT LABORATORY IN ACCORDANCE WITH ACI 318 AND REVIEWED BY THE ENGINEER.
5. ADMIXTURES SHALL COMPLY WITH ASTM C494 AND BE OF A TYPE THAT INCREASES THE WORKABILITY OF THE CONCRETE. ADMIXTURES SHALL NOT BE CONSIDERED TO REDUCE THE SPECIFIED MINIMUM CEMENT CONTENT (CALCIUM CHLORIDE SHALL NOT BE USED).
6. PLACEMENT OF CONCRETE SHALL BE IN CONFORMANCE WITH THE ACI 301.
7. CONTROL JOINTS SHALL BE LOCATED AND FORMED AS SHOWN ON THE DRAWINGS. SLAB CONTROL JOINTS SHALL BE PLACED AT POINTS OF LOW STRESS AS WELL AS LOCATED TO MINIMIZE EFFECTS OF SHRINKAGE. KEY AND DOWEL SLAB CONSTRUCTION JOINTS AS SHOWN ON THE PLANS. ALL CONSTRUCTION JOINTS SHALL BE CLEANED THOROUGHLY AND ALL LAITANCE SHALL BE REMOVED FROM THE SURFACE. ALL VERTICAL JOINTS SHALL BE THOROUGHLY WETTED AND SLUSHED WITH A COAT OF NEAT CEMENT OR BONDING AGENT IMMEDIATELY BEFORE POURING NEW CONCRETE.
8. SET FLOOR SCREEDS TO REQUIRED ELEVATIONS DURING CONCRETE POURING TO COMPENSATE FOR FORM SETTLEMENT.
9. ANCHOR BOLTS, DOWELS AND OTHER EMBEDDED ITEMS SHALL BE ACCURATELY SET IN PLACE BEFORE CONCRETE IS POURED.
10. GROUT: PRE-MANUFACTURED MIX WITH MINIMUM COMPRESSIVE STRENGTH AT THE END OF 28 DAYS OF 7500 PSI WITH MINIMUM WATER CONSISTENT WITH PLACING REQUIREMENTS.
11. AIR CONTENT: CONFORM TO ACI 318 TABLE 4.1.1 EXPOSURE CLASS F2.

REINFORCING STEEL

1. ALL REINFORCING STEEL SHALL CONFORM TO ASTM A615 GRADE 60.
2. REINFORCING TO BE WELDED SHALL CONFORM TO ASTM A706 GRADE 60.
3. ALL CONCRETE SHALL BE REINFORCED UNLESS SPECIFICALLY NOTED "NOT REINFORCED" IN THE DRAWINGS. IF REINFORCING BARS ARE NOT SHOWN OR NOTED, PROVIDE SAME REINFORCEMENT AS FOR SIMILAR CONDITIONS ELSEWHERE IN THE WORK, OR AS DIRECTED BY THE ENGINEER.
4. REINFORCEMENT BARS SHALL NOT BE SPLICED EXCEPT AS DETAILED AND LOCATED ON DRAWINGS.
5. REINFORCEMENT BARS SHALL BE ACCURATELY PLACED AND FIRMLY SUPPORTED. USING TIES AND SUPPORT BARS IN ADDITION TO REINFORCEMENT SHOWN. DOWELS SHOULD BE PROVIDED TO MATCH ALL REINFORCEMENT AT CONSTRUCTION JOINTS UNLESS OTHERWISE NOTED.
6. NO REINFORCEMENT WELDING SHALL BE DONE UNLESS SHOWN ON THE DRAWINGS OR APPROVED BY THE ENGINEER (TACK WELDING INCLUDED). WELDING OF REINFORCEMENT IS ONLY PERMITTED FOR REINFORCING STEEL HAVING A CARBON EQUIVALENT LESS THAN 0.65% ACCORDING TO AWS D1.4 SPECIFICATIONS.
7. ALL DIMENSIONS SHOWN FOR LOCATION OF REINFORCING ARE TO THE FACE OF BARS AND DENOTE CLEAR COVERAGE UNLESS OTHERWISE NOTED.

LOCATION	CONDITION	MINIMUM COVER
CONCRETE CAST AGAINST EARTH	ALL	3"
FORMED CONCRETE EXPOSED TO EARTH OR WEATHER	#5 AND SMALLER #6 AND LARGER	1½" 2"
FORMED CONCRETE NOT EXPOSED TO EARTH OR WEATHER	SLABS AND WALLS #11 AND SMALLER SLABS AND WALLS #14 AND LARGER BEAMS AND COLUMNS	¾" 1½" 1½"

8. DRAWINGS SHOW TYPICAL REINFORCING CONDITIONS. CONTRACTOR SHALL PREPARE DETAILED PLACEMENT DRAWINGS OF ALL CONDITIONS SHOWING QUANTITY SPACING, SIZES, CLEARANCE, LAPS, INTERSECTIONS, AND COVERAGE REQUIRED BY STRUCTURAL DETAILS, APPLICABLE CODE AND TRADE STANDARDS. CONTRACTOR SHALL NOTIFY REINFORCING INSPECTOR OF ANY ADJUSTMENTS FROM TYPICAL CONDITIONS WHICH ARE PROPOSED IN PLACEMENT DRAWINGS TO FACILITATE FIELD PLACEMENT OF REINFORCING STEEL AND CONCRETE.

STRUCTURAL STEEL

1. STRUCTURAL STEEL SHALL CONFORM TO THE ASTM DESIGNATION AS INDICATED BELOW UNLESS NOTED OTHERWISE

STEEL TUBES	ASTM A500 GRADE B
ALL WF SHAPES	ASTM A992 GRADE 50
ANGLES, CHANNELS AND PLATES	ASTM A572 GRADE 50
PIPE	ASTM A53 GRADE B
MACHINE BOLTS	ASTM A307
HIGH STRENGTH BOLTS	ASTM A325X
ANCHOR BOLTS	ASTM F1554 GRADE 55 HOT DIPPED GALVANIZED
THREADED ROD	ASTM A572 GRADE 50
NUTS	ASTM A563
HARDENED WASHERS	ASTM F436
CONCRETE STUD CONNECTORS	ASTM A108

2. ALL WELDING SHALL BE PERFORMED BY AWS CERTIFIED WELDERS IN ACCORDANCE WITH AWS D1.1 USING E70XX ELECTRODES FOR SHIELDED METAL ARC, F7XX-EXXX FOR SUBMERGED ARC AND E70-X FOR GAS METAL ARC. WELDS SHALL BE INSPECTED BY AN AWS-CWI INSPECTOR.
3. WHERE MINIMUM AISC FILLET WELD THICKNESS REQUIREMENTS EXCEED WELDS SHOWN ON DETAILS, PROVIDE MINIMUM AISC WELD.
4. ALL BEAMS SHALL BE FABRICATED WITH THE NATURAL CAMBER UP. PROVIDE CAMBERS WHERE SHOWN ON THE DRAWINGS.
5. BOLTS HOLES SHALL BE 1/16 LARGER IN DIAMETER THAN THE BOLT. USE STANDARD AISC GAGE AND PITCH FOR BOLTS EXCEPT AS NOTED OTHERWISE.
6. HOLES FOR ANCHOR BOLTS EMBEDDED IN CONCRETE SHALL BE THE SAME NOMINAL DIAMETER OF THE BOLT PLUS 5/16" UNLESS NOTED OTHERWISE.
7. THE CONTRACTOR SHALL SUBMIT SHOP DRAWINGS TO THE ENGINEER FOR REVIEW. SHOP DRAWINGS SHALL SHOW SHOP FABRICATION DETAILS, FIELD ASSEMBLY DETAILS AND ERECTION DIAGRAMS.
8. AFTER FABRICATION ALL STEEL SHALL BE HOT DIPPED GALVANIZED IN ACCORDANCE WITH ASTM A153.

100% SUBMITTAL

FOR REDUCED PLANS
ORIGINAL SCALE IN INCHES

SHEET NAME: SANITARY SEWER FORCE MAIN UTILITY NOTES

DRAWING NAME: 19-2418-700-CA-GEN.DWG

BY | REVISION | DATE

REGISTERED PROFESSIONAL ENGINEER
D. TODD KOTEY
No. C44811
Exp. 3/31/22
CIVIL
STATE OF CALIFORNIA

PROJECT ENGINEER
D. TODD KOTEY

SANTA CRUZ COUNTY SANITATION DISTRICT
MURRAY STREET BRIDGE
SANITARY SEWER – SANITARY SEWER FORCE MAIN UTILITY NOTES

DRAWN: DCP
CHECKED: DTK
DATE: 7/30/2021
SCALE: NO SCALE
JOB NO. 234585

SS-1

SURVEY CONTROL COORDINATE TABLE			
NO.	NORTHING	EASTING	ELEVATION
CP-5	1814293.14	6122821.55	11.26
CP-6	1814311.35	6122802.40	22.80
CP-8	1814283.16	6122356.14	6.17
CP-12	1814147.42	6121945.92	48.53
CP-13	1814703.54	6122000.84	50.86

BASIS OF BEARING

N 88°46'18" E L=465.52 BETWEEN CONTROL POINTS #5 AND #8. SAID BEARING BEING A CALIFORNIA COORDINATE SYSTEM (NAD 83) ZONE 3 GRID BEARING DETERMINED BY GPS MEASUREMENTS.

BENCHMARK

SANTA CRUZ CITY BENCHMARK F6-16, A LEAD PLUG AND TAG IN THE TOP OF THE CONCRETE CURB AT THE EASTERN SIDE OF OWEN STREET AT ITS INTERSECTION WITH HALL STREET.
ELEVATION 50.85 FEET (NGVD 29).

100% SUBMITTAL

FOR REDUCED PLANS
ORIGINAL SCALE IN INCHES

SHEET NAME: SANITARY SEWER FORCE MAIN INDEX AND CONTROL

DRAWING NAME: 19-2418-700-CA-GEN.DWG

DATE	REVISION	BY

REGISTERED PROFESSIONAL ENGINEER D. TODD KOTEY No. C44811 Exp. 3/31/22 CIVIL STATE OF CALIFORNIA

PROJECT ENGINEER
D. TODD KOTEY

SANTA CRUZ COUNTY SANITATION DISTRICT
MURRAY STREET BRIDGE
SANITARY SEWER – SANITARY SEWER FORCE MAIN INDEX AND CONTROL

DRAWN: DCP
CHECKED: DTK
DATE: 7/30/2021
SCALE: 1" = 50'
JOB NO. 234585

SS-2
37 of 167

Jul 30, 2021 – 9:56am
P:\Roseville_Client\Santa Cruz County Sanitation District\583-525 – Murray Street Bridge\06 CADD\19-2418-700-CA-GEN.dwg

SEQUENCE SCHEDULE

PHASE	LEGEND	PROPOSED BRIDGE PLAN STAGE	ITEMS	VALVE	DWGS
PHASE 1		1–13	INSTALL 30" BYPASS ON NORTH SIDE OF EXISTING BRIDGE SEE SHEET SS–5.	36W: OPEN 30W: CLOSE 36E: OPEN 30E: CLOSE	SS–5
		1–15	INSTALL TEE AND VAULT–1 ON SOUTHWEST SIDE OF BRIDGE. SEE SHEET SS–6. (MUST BE DONE DURING FULL BRIDGE CLOSURE)		SS–6
		1–16	INSTALL 30" PIPE UNDER MURRAY STREET ON WEST SIDE FOR PERMANENT & PHASE 2 BYPASS. SEE SHEET SS–6. (MUST BE DONE DURING FULL BRIDGE CLOSURE)		SS–6
		2A–2 & 2A–3	BORE AND JACK 36" PIPE UNDER MURRAY ST. FROM NORTH TO SOUTH. SEE SHEET SS–13 FOR BORE AND JACK DETAILS. CONSTRUCT CUT AND COVER PORTION OF PIPE BETWEEN BORE AND JACK LAUNCH PIT PORTION ON THE NORTH SIDE TO VAULT–4. SEE SHEET SS–14 FOR CONNECTION DETAILS.		SS–13 SS–14
		2B–3	INSTALL EAST & WEST CONNECTION MANIFOLD (VALVES 36W AND 30W). SEE SHEET SS–14. CONSTRUCT VAULT–4. SEE SHEET SS–19. INSTALL EAST DIVERSION MANIFOLD, SEE SHEET SS–14 CONSTRUCT FLOOR OF VAULT–5, SEE SHEET SS–17 INSTALL SOUTH CONNECTION MANIFOLD (VALVES 36E AND 30E). SEE SHEET SS–15		SS–14 SS–15 SS–17 SS–19
		2B–4	CONNECT TO EXISTING SSFM. COORDINATE WITH DISTRICT TO SHUT DOWN EXISTING SSFM FOR CONNECTION. EXISTING SSFM MAXIMUM SHUT OFF TIME: 2 HOURS.		
ABANDONMENT		4C–3	ABANDON/REMOVE EXISTING SSFM. SEE SHEET SS–4 FOR DETAILS.	N/A	SS–4
PHASE 2		5B–4 5B–5 6–5 THROUGH 6–8	CUT AND COVER CONSTRUCT PORTION OF PIPE BETWEEN VAULT–5 AND VAULT–2. CONSTRUCT VAULT–2 INSTALL 30" BYPASS ON SOUTH SIDE OF EXISTING BRIDGE. REMOVE PHASE 1 BYPASS.	36W: CLOSE 30W: OPEN 36E: CLOSE 30E: OPEN	SS–6
PERMANENT		8–4 & 8–5	INSTALL 36" PERMANENT PIPE, 42" CASING PIPE, TRUSS, PIPE SUPPORTS, ETC. ON BRIDGE	36W: OPEN 30W: CLOSE 36E: OPEN 30E: CLOSE	SS–7 SS–8
		8–6	INSTALL REMAINING PERMANENT PIPE UNDERGROUND AND CONNECT. TURN VALVES TO FINAL POSITION. REMOVE PHASE 2 BYPASS AND SALVAGE TO SCCSD CORP YARD.		SS–7 SS–8

100% SUBMITTAL

FOR REDUCED PLANS
ORIGINAL SCALE IN INCHES

SHEET NAME: SEQUENCE

DRAWING NAME: 19–2418–700–CA–SEQUENCE.DWG

BY	REVISION	DATE

PROFESSIONAL ENGINEER REGISTERED D. TODD KOTEY No. C44811 Exp. 3/31/22 CIVIL STATE OF CALIFORNIA

PROJECT ENGINEER D. TODD KOTEY

SANTA CRUZ COUNTY SANITATION DISTRICT
MURRAY STREET BRIDGE
SANITARY SEWER – SEQUENCE

DRAWN: MGI
CHECKED: DTK
DATE: 7/30/2021
SCALE: 1" = 30'
JOB NO. 234585

SS–3

Jul 30, 2021 – 8:51am
P:\Moseville_Client\Santa Cruz County Sanitation District\5835-525 – Murray Street Bridge\06 CADD\19-2418-700-CA-SEQUENCE.dwg

NOTES:

1. EXISTING VALVE MANHOLES: ABANDON IN PLACE.
2. EXISTING MANHOLES AND WHERE NOTED: EXPOSE AND REMOVE [illegible] BELOW GROUND. THEN PERFORATE REMAINING STRUCTURE. BACKFILL REMAINING [illegible] WITH SAND.
3. REMOVE EXISTING SSFM THEN CONCRETE CAP EXISTING PIPE ON EACH SIDE OF REMOVAL.
4. SLURRY BACKFILL ABANDONED SSFM BEFORE [illegible] CAPPING PIPE.
5. CONTRACTOR TO FIELD VERIFY EXACT LOCATION OF EXISTING UTILITIES PRIOR TO CONSTRUCTION AND NOTIFY THE ENGINEER OF ANY DISCREPANCIES BEFORE PROCEEDING WITH WORK.

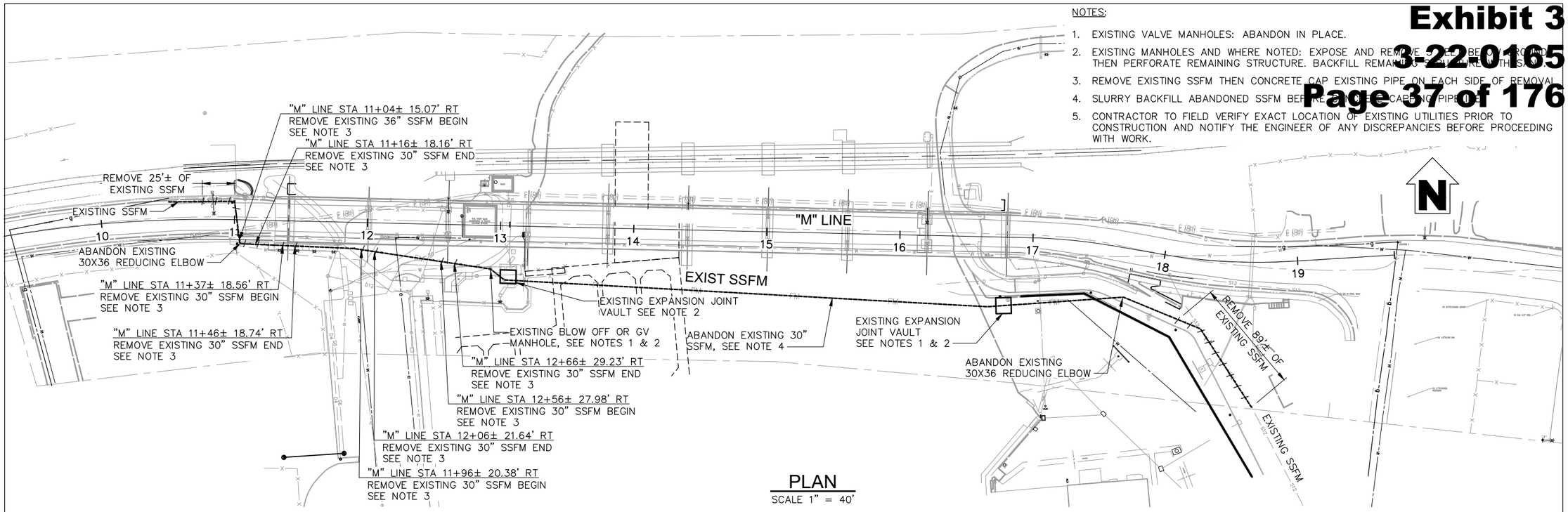

PLAN
SCALE 1" = 40'

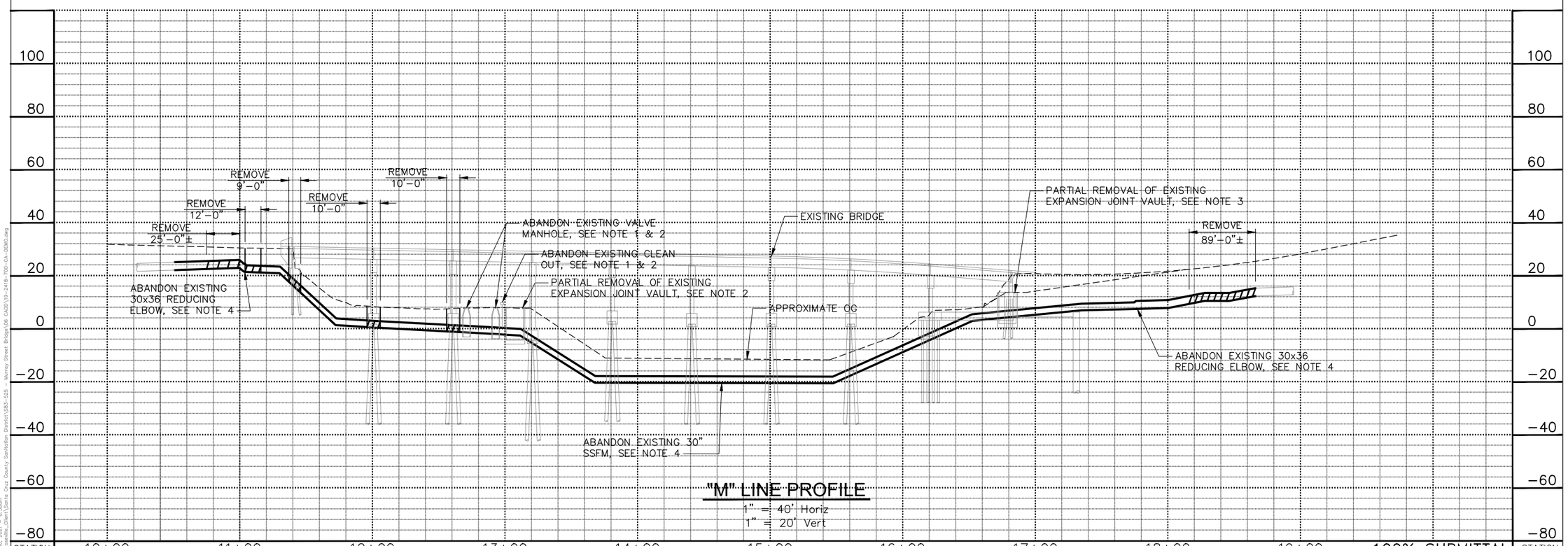

"M" LINE PROFILE
1" = 40' Horiz
1" = 20' Vert

FOR REDUCED PLANS
ORIGINAL SCALE IN INCHES

SHEET NAME: ABANDONMENT AND DEMOLITION

DRAWING NAME: 19-2418-700-CA-DEMO.DWG

BY	REVISION	DATE

REGISTERED PROFESSIONAL ENGINEER D. TODD KOTEY No. C44811 Exp. 3/31/22 CIVIL STATE OF CALIFORNIA

PROJECT ENGINEER
D. TODD KOTEY

SANTA CRUZ COUNTY SANITATION DISTRICT
MURRAY STREET BRIDGE
SANITARY SEWER – ABANDONMENT AND DEMOLITION

DRAWN:	DCP
CHECKED:	DTK
DATE:	7/30/2021
SCALE:	1" = 50'
JOB NO.	234585

SS-4

Jul 30, 2021 - 8:36am
P:\Roseville_Client\Santa Cruz County Sanitation District\583-525 - Murray Street Bridge\06 CADD\19-2418-700-CA-DEMO.dwg

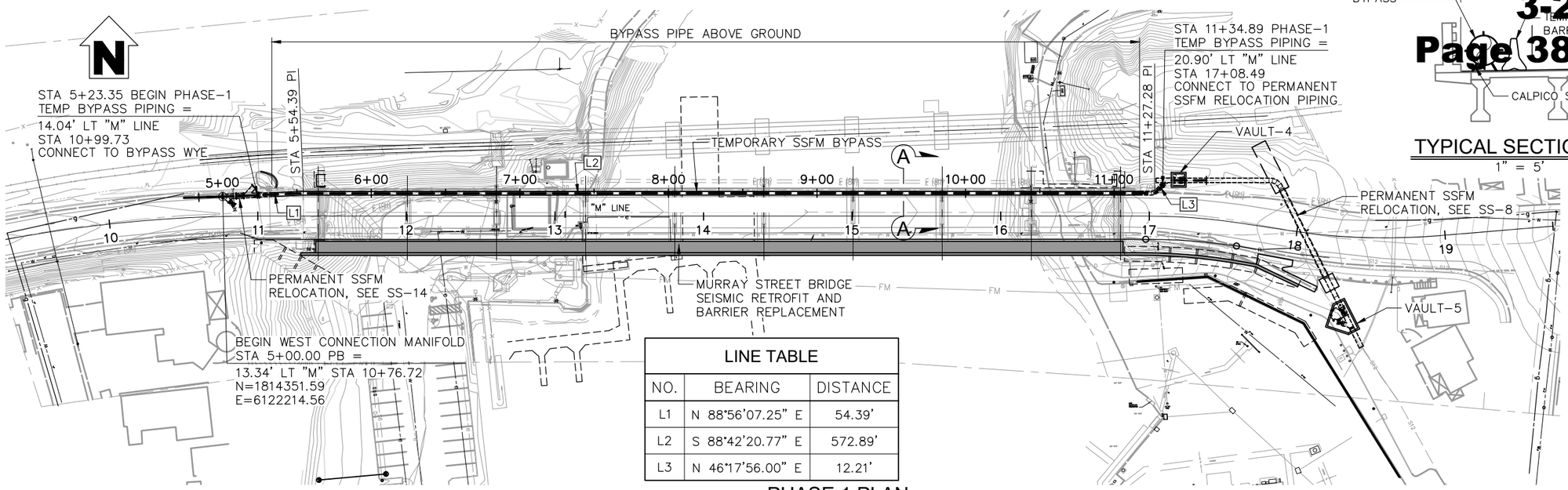

LINE TABLE		
NO.	BEARING	DISTANCE
L1	N 88°56'07.25" E	54.39'
L2	S 88°42'20.77" E	572.89'
L3	N 46°17'56.00" E	12.21'

PHASE 1 PLAN

SCALE: 1" = 40'

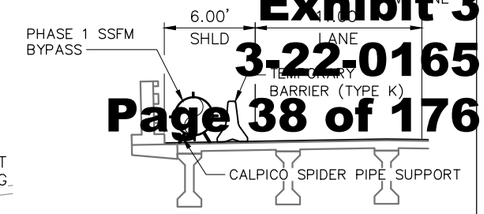

TYPICAL SECTION A-A

1" = 5'

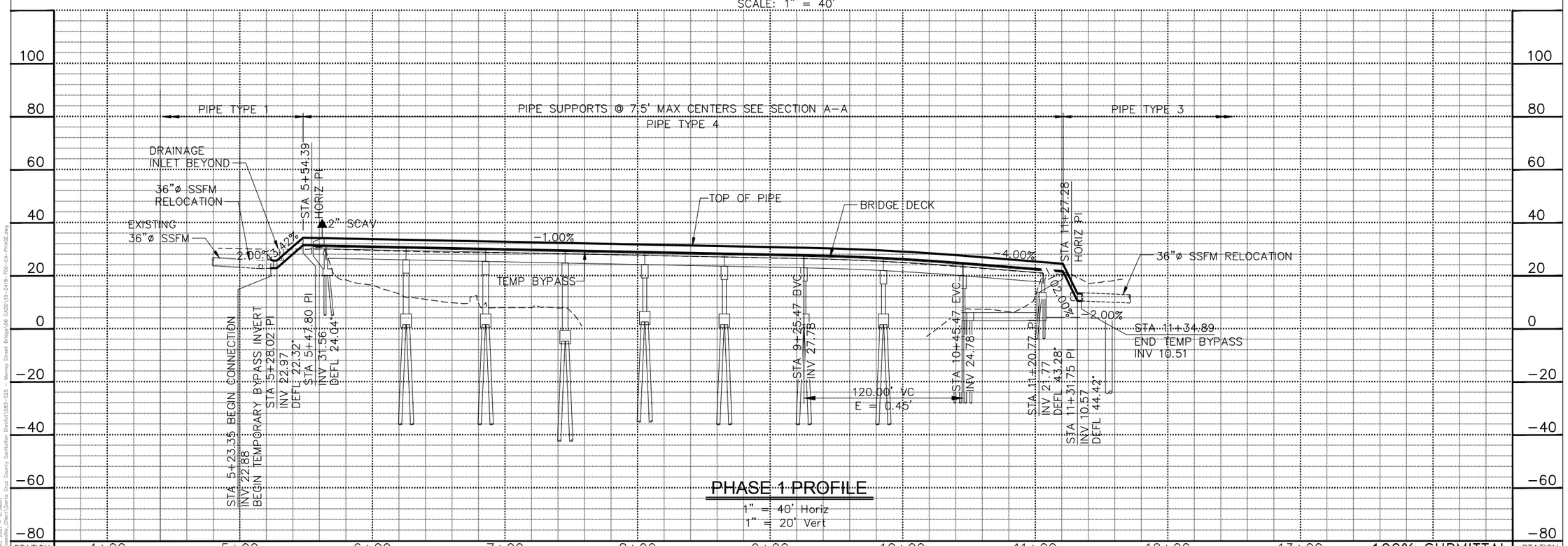

PHASE 1 PROFILE

1" = 40' Horiz
1" = 20' Vert

FOR REDUCED PLANS
ORIGINAL SCALE IN INCHES

SHEET NAME: PHASE-1 PLAN AND PROFILE

DRAWING NAME: 19-2418-700-CA-PHASE.DWG

BY	REVISION	DATE

REGISTERED PROFESSIONAL ENGINEER D. TODD KOTEY No. C44811 Exp. 3/31/22 CIVIL STATE OF CALIFORNIA

PROJECT ENGINEER
D. TODD KOTEY

SANTA CRUZ COUNTY SANITATION DISTRICT
MURRAY STREET BRIDGE
SANITARY SEWER – PHASE-1 PLAN AND PROFILE

DRAWN:	DCP
CHECKED:	DTK
DATE:	7/30/2021
SCALE:	AS SHOWN
JOB NO.	234585

SS-5

Jul 30, 2021 - 4:59pm
P:\Roseville_Client\Santa Cruz County Sanitation District\583-525 - Murray Street Bridge\06 CAD\19-2418-700-CA-PHASE.dwg

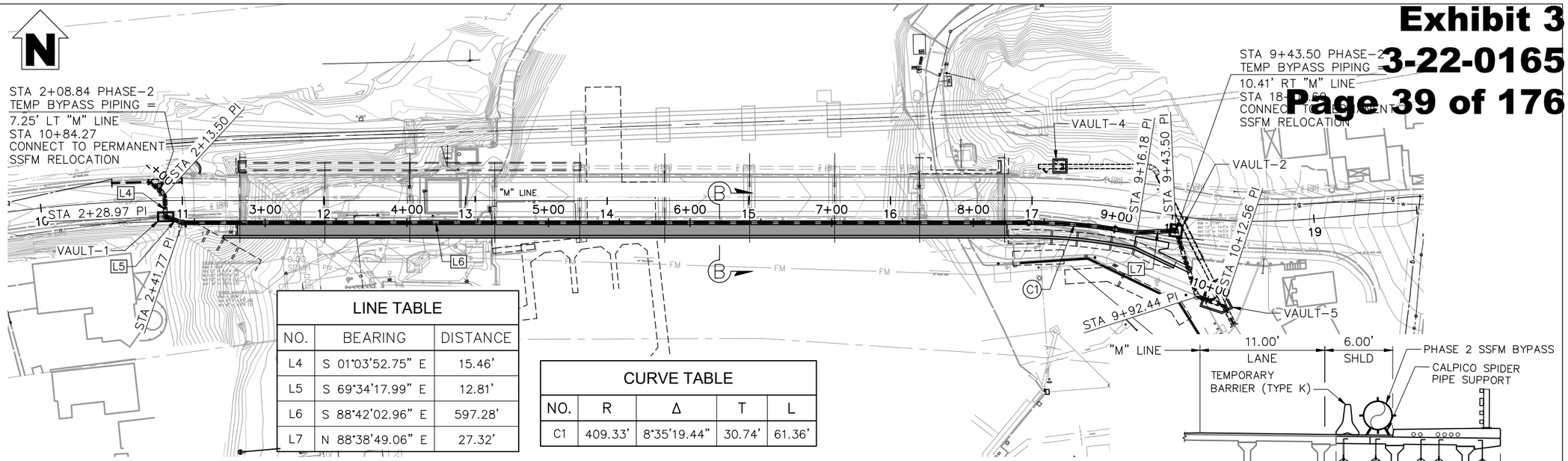

LINE TABLE		
NO.	BEARING	DISTANCE
L4	S 01°03'52.75" E	15.46'
L5	S 69°34'17.99" E	12.81'
L6	S 88°42'02.96" E	597.28'
L7	N 88°38'49.06" E	27.32'

CURVE TABLE				
NO.	R	Δ	T	L
C1	409.33'	8°35'19.44"	30.74'	61.36'

PHASE 2 PLAN

SCALE: 1" = 40'

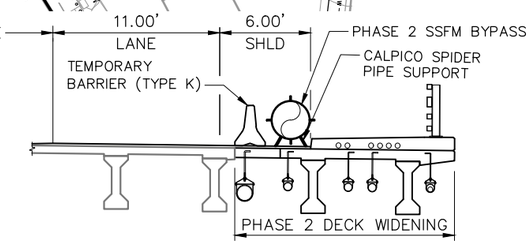

TYPICAL SECTION B-B

1" = 5'

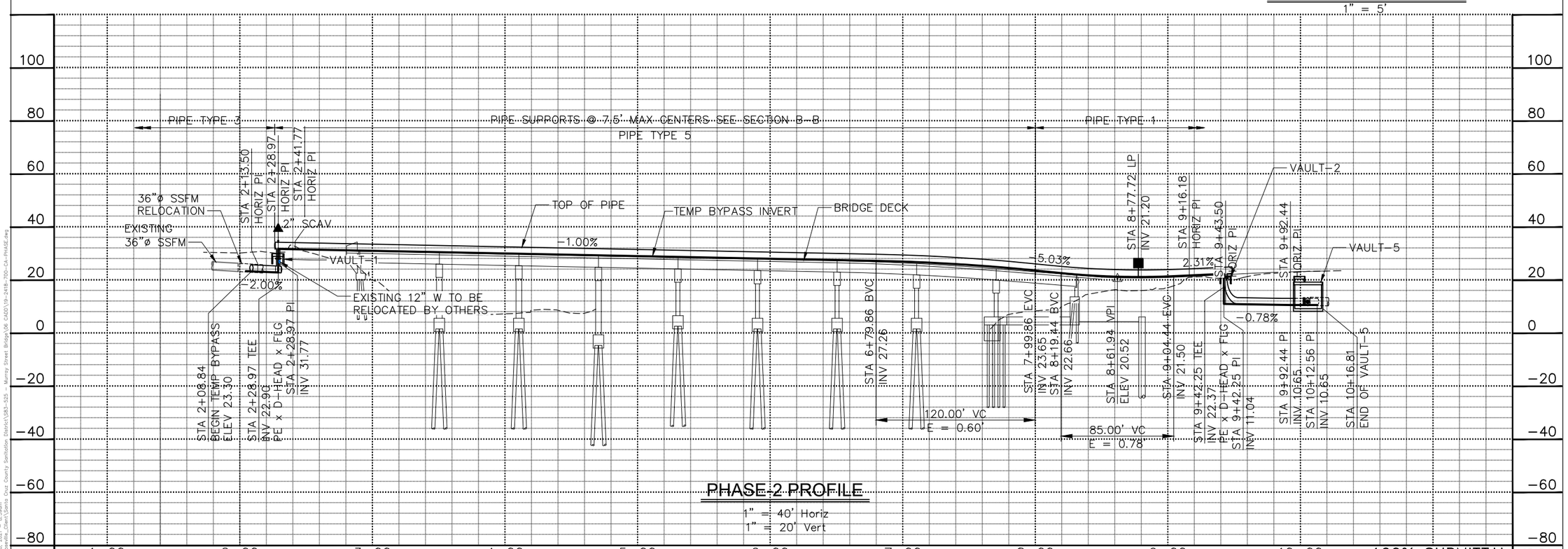

PHASE-2 PROFILE

1" = 40' Horiz
1" = 20' Vert

FOR REDUCED PLANS
ORIGINAL SCALE IN INCHES

SHEET NAME: PHASE-2 PLAN AND PROFILE

DRAWING NAME: 19-2418-700-CA-PHASE.DWG

DATE	REVISION	BY

REGISTERED PROFESSIONAL ENGINEER
D. TODD KOTEY
No. C44811
Exp. 3/31/22
CIVIL
STATE OF CALIFORNIA

PROJECT ENGINEER
D. TODD KOTEY

SANTA CRUZ COUNTY SANITATION DISTRICT
MURRAY STREET BRIDGE
SANITARY SEWER – PHASE-2 PLAN AND PROFILE

DRAWN:	DCP
CHECKED:	DTK
DATE:	7/30/2021
SCALE:	AS SHOWN
JOB NO.	234585

SS-6

LINE TABLE		
NO.	BEARING	DISTANCE
L1	N 88°56'07.25" E	15.56'
L2	N 43°56'07.25" E	13.98'
L3	S 88°42'04.00" E	610.85'

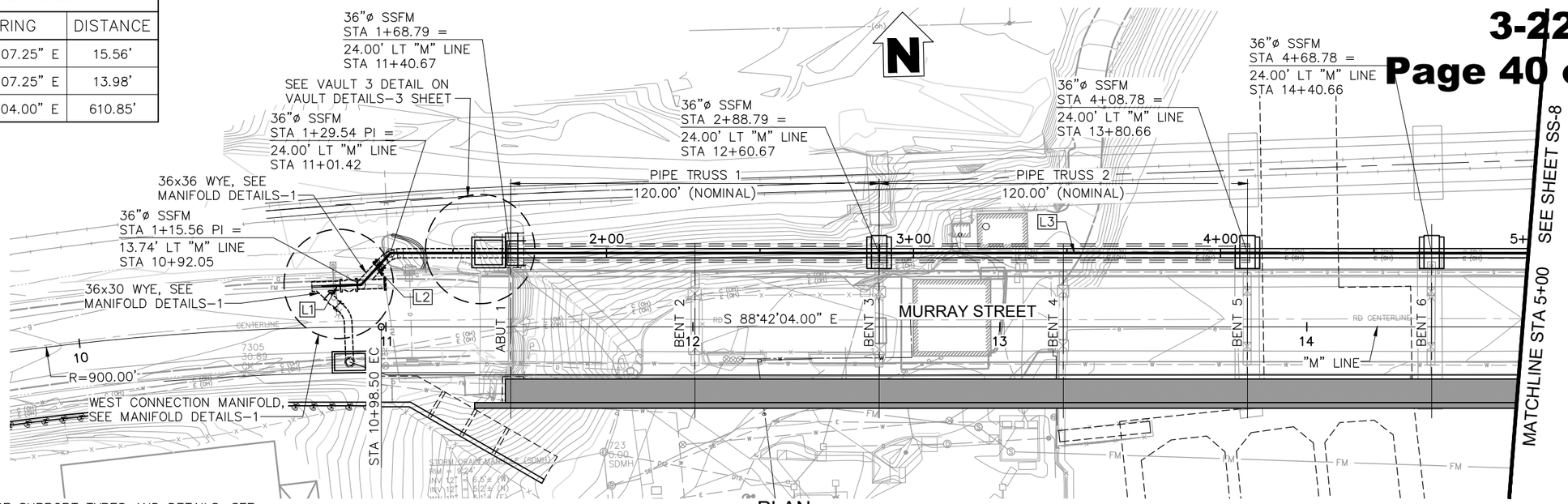

NOTES:
1. FOR PIPE SUPPORT TYPES AND DETAILS, SEE PIPE SUPPORT DETAILS SHEETS
2. SEE BRIDGE PLANS FOR UTILITY INFORMATION

PLAN
1" = 20'

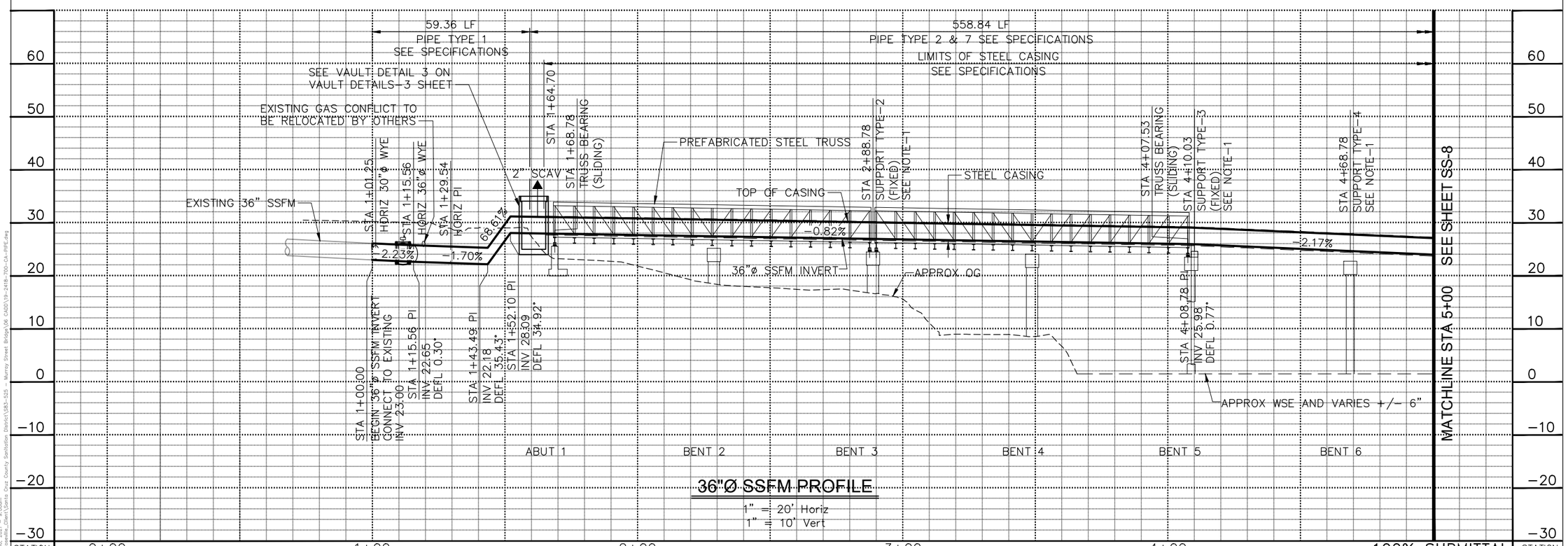

36"Ø SSFM PROFILE
1" = 20' Horiz
1" = 10' Vert

FOR REDUCED PLANS ORIGINAL SCALE IN INCHES 0 1 2 3

SHEET NAME: PLAN AND PROFILE

DRAWING NAME: 19-2418-700-CA-PIPE.DWG

BY	REVISION	DATE

REGISTERED PROFESSIONAL ENGINEER D. TODD KOTEY No. C44811 Exp. 3/31/22 CIVIL STATE OF CALIFORNIA

PROJECT ENGINEER D. TODD KOTEY

SANTA CRUZ COUNTY SANITATION DISTRICT
MURRAY STREET BRIDGE
STA 1+00 TO STA 5+00
SANITARY SEWER – PLAN AND PROFILE

DRAWN:	DCP
CHECKED:	DTK
DATE:	7/30/2021
SCALE:	AS SHOWN
JOB NO.	234585

SS-7

Jul 30, 2021 - 9:20am
P:\Roseville_Client\Santa Cruz County Sanitation District\583-525 - Murray Street Bridge\06 CADD\19-2418-700-CA-PIPE.dwg

LINE TABLE		
NO.	BEARING	LENGTH
L3	S 88°42'04.00" E	610.85'
[illegible]	[illegible]	11[illegible]

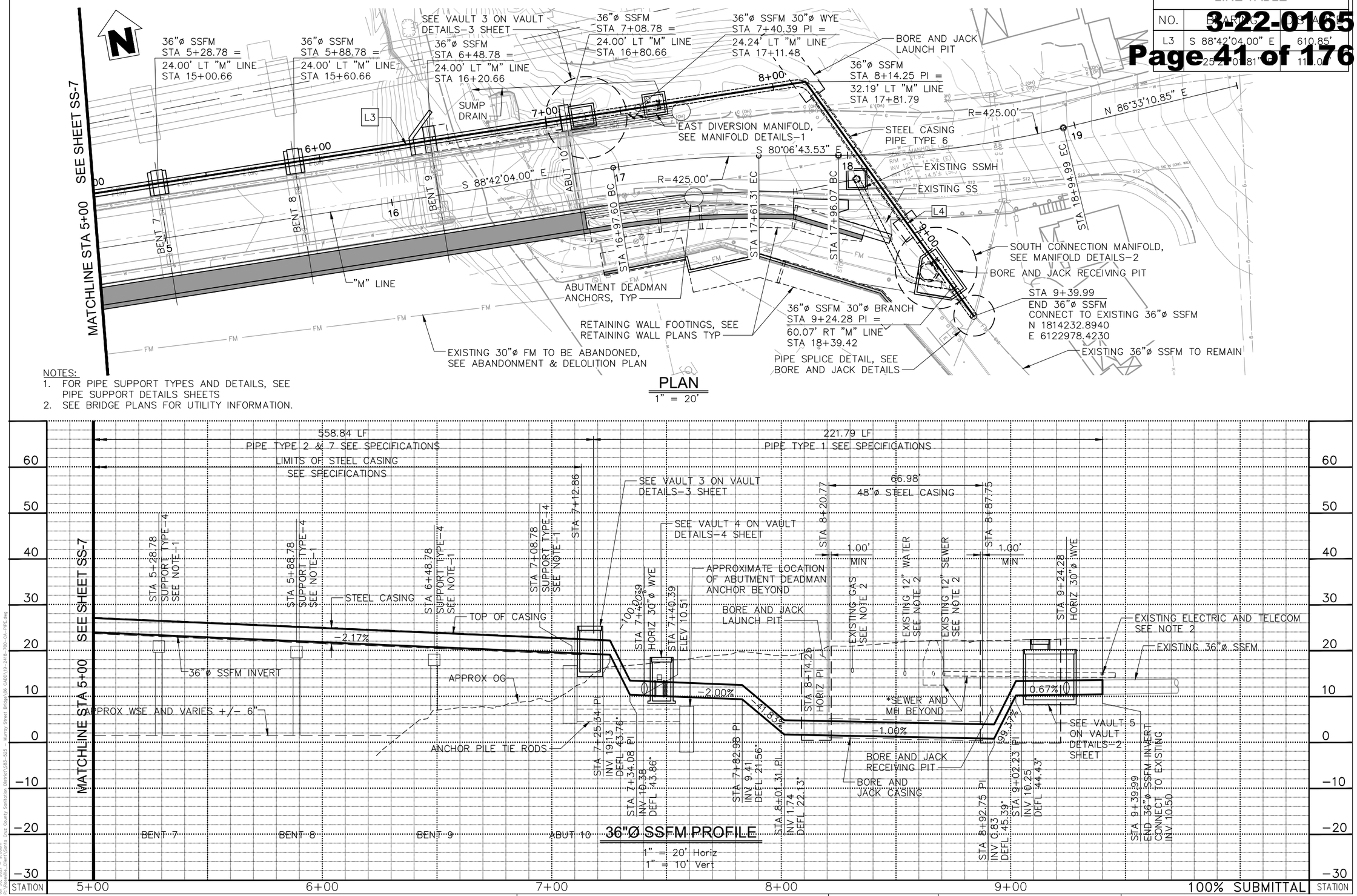

PLAN
1" = 20'

NOTES:
1. FOR PIPE SUPPORT TYPES AND DETAILS, SEE PIPE SUPPORT DETAILS SHEETS
2. SEE BRIDGE PLANS FOR UTILITY INFORMATION.

36"Ø SSFM PROFILE
1" = 20' Horiz
1" = 10' Vert

100% SUBMITTAL

FOR REDUCED PLANS ORIGINAL SCALE IN INCHES

SHEET NAME: PLAN AND PROFILE

DRAWING NAME: 19-2418-700-CA-PIPE.DWG

BY	REVISION	DATE

REGISTERED PROFESSIONAL ENGINEER D. TODD KOTEY No. C44811 Exp. 3/31/22 CIVIL STATE OF CALIFORNIA

PROJECT ENGINEER
D. TODD KOTEY

SANTA CRUZ COUNTY SANITATION DISTRICT
MURRAY STREET BRIDGE
STA 5+00 TO STA 9+39.99
SANITARY SEWER – PLAN AND PROFILE

DRAWN:	DCP
CHECKED:	DTK
DATE:	7/30/2021
SCALE:	SCALE
JOB NO.	234585

SS-8

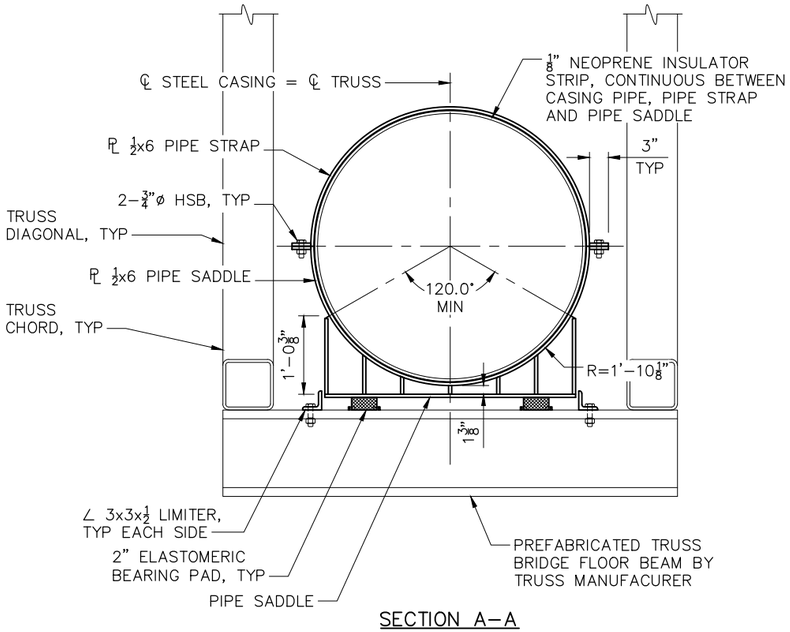

SECTION A–A

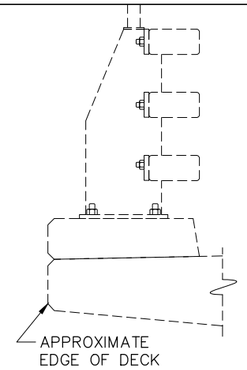

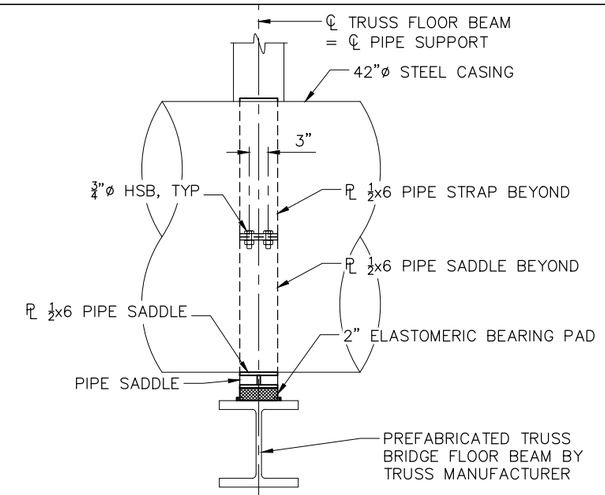

SECTION B–B

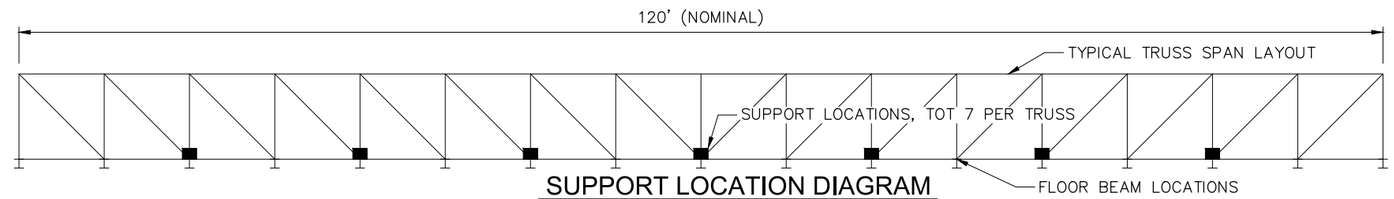

SUPPORT LOCATION DIAGRAM
NO SCALE

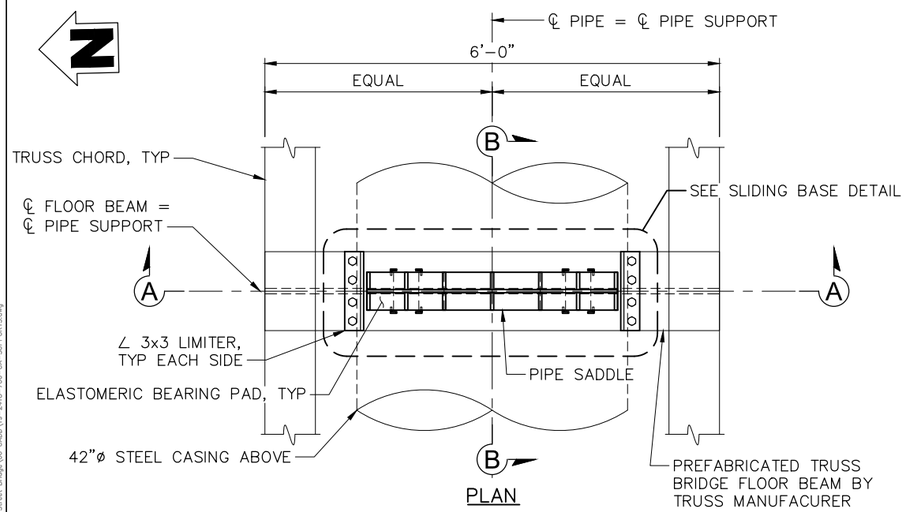

PLAN

SUPPORT TYPE-1 (SLIDING)
1" = 1'-0"

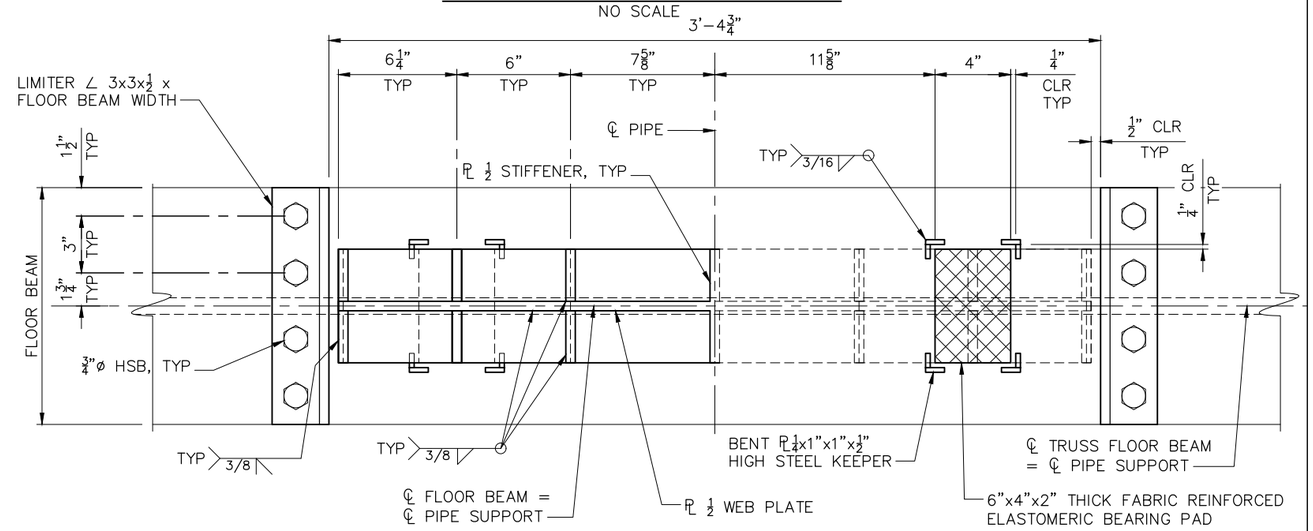

PLAN AT BASE PLATE

PLAN AT BEARING

SLIDING BASE DETAIL
3" = 1'-0"

PIPE SUPPORT ELEVATION DATA

	ABUT 1	BENT 2	BENT 3	BENT 4	BENT 5	BENT 6	BENT 7	BENT 8	BENT 9	ABUT 10
BOTTOM OF STEEL CASING Elev	27.66	N/A	26.68	N/A	25.70	24.40	23.10	21.80	20.50	19.20
TOP OF CONCRETE Elev (VERIFY)	25.58	N/A	24.50	N/A	23.52/24.60	22.75	22.17	21.00	19.25	16.75
DIMENSION "a" SEE SS-12	2.08'	N/A	2.17'	N/A	2.17'/1.09'	1.64'	0.93'	0.80'	1.25'	2.45'

100% SUBMITTAL

FOR REDUCED PLANS ORIGINAL SCALE IN INCHES

SHEET NAME: PIPE SUPPORT DETALS-1

DRAWING NAME: 19-2418-700-CA-SUPPORTS.DWG

BY	REVISION	DATE

REGISTERED PROFESSIONAL ENGINEER D. TODD KOTEY No. C44811 Exp. 3/31/22 CIVIL STATE OF CALIFORNIA

PROJECT ENGINEER D. TODD KOTEY

SANTA CRUZ COUNTY SANITATION DISTRICT
MURRAY STREET BRIDGE
SANITARY SEWER – PIPE SUPPORT DETALS-1

DRAWN: DCP
CHECKED: DTK
DATE: 7/30/2021
SCALE: AS SHOWN
JOB NO. 234585

SS-9

Jul 30, 2021 - 9:01am
P:\Roseville_Civil\Santa Cruz County Sanitation District\583-525 - Murray Street Bridge\06 CADD\19-2418-700-CA-SUPPORTS.dwg

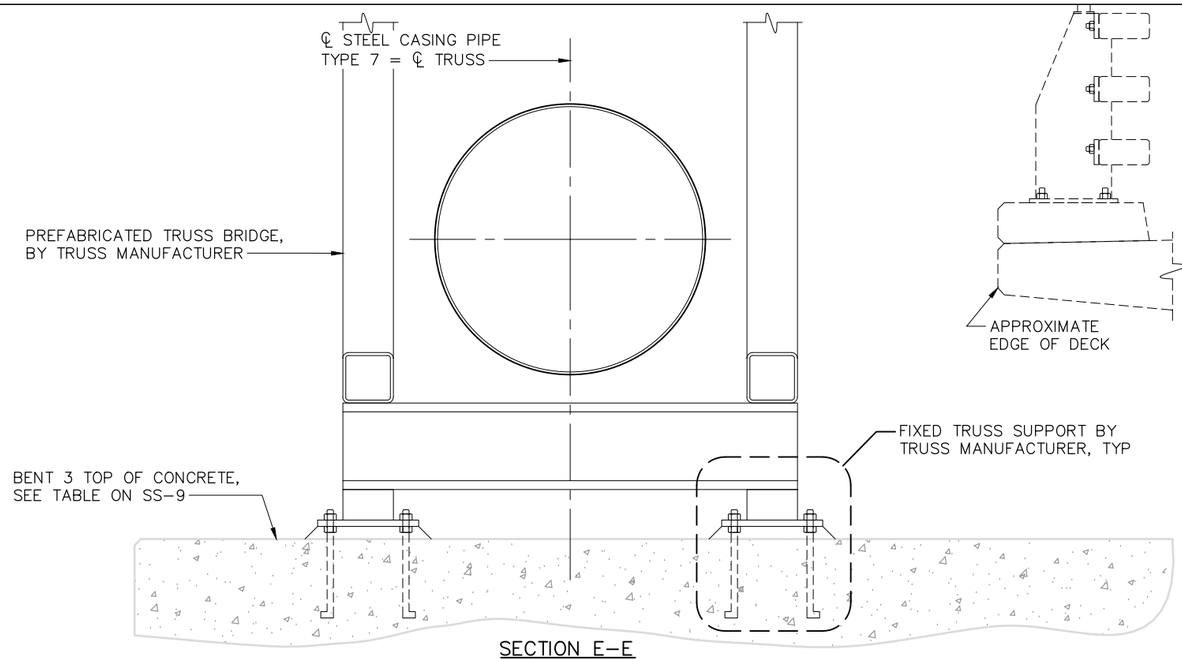

SECTION E-E

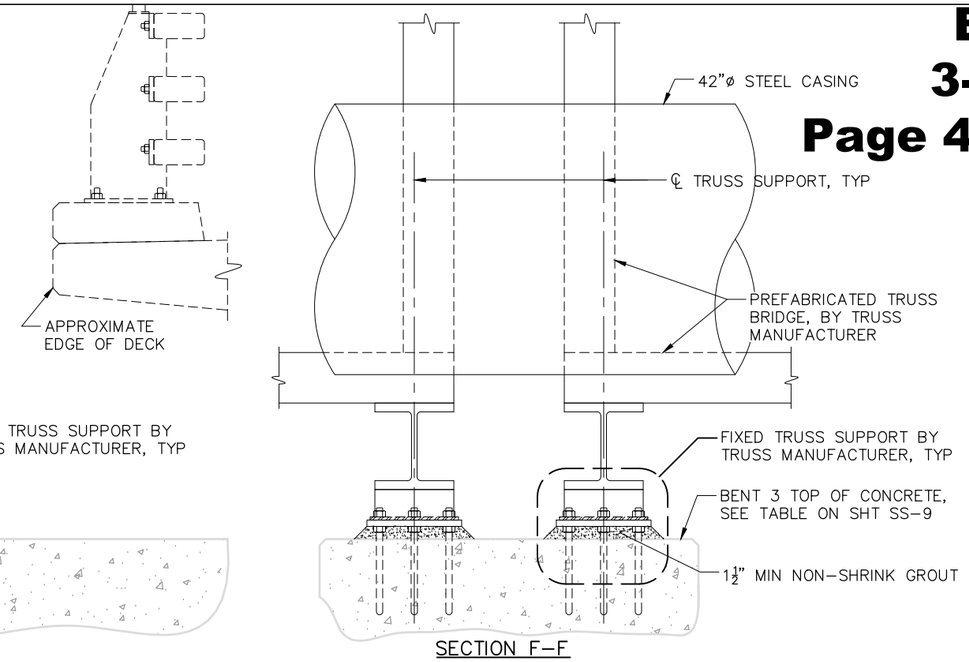

SECTION F-F

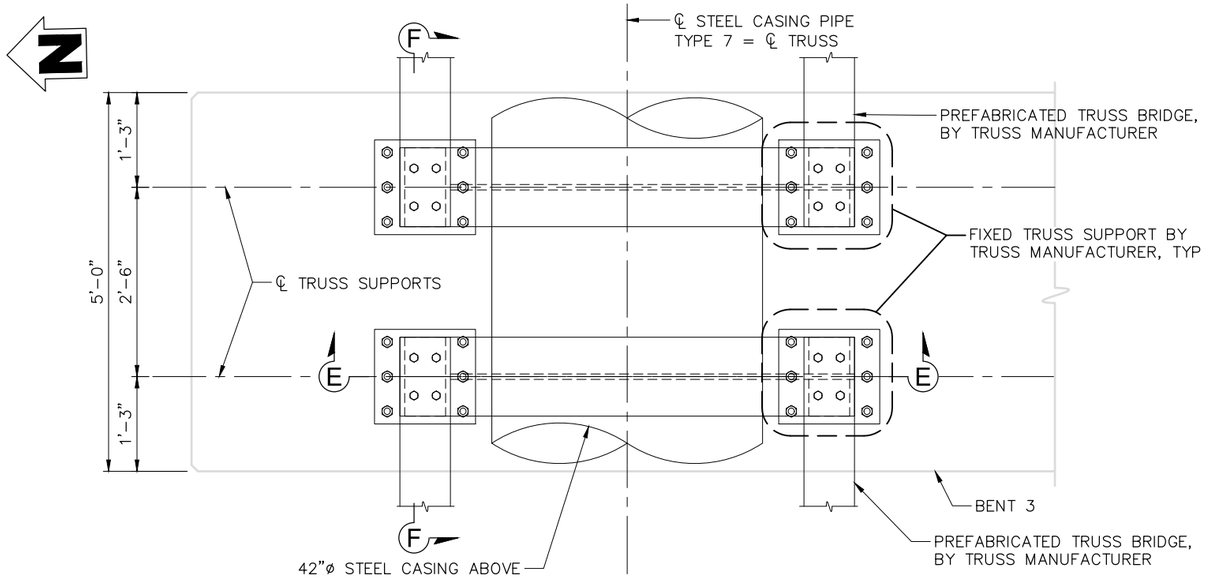

PLAN

SUPPORT TYPE-2 (FIXED)

1" = 1'-0"

NOTE: TO BE DESIGNED BY TRUSS MANUFACTURER

100% SUBMITTAL

FOR REDUCED PLANS ORIGINAL SCALE IN INCHES		SHEET NAME: PIPE SUPPORT DETAILS-2	DRAWING NAME: 19-2418-700-CA-SUPPORTS.DWG

BY	REVISION	DATE

REGISTERED PROFESSIONAL ENGINEER D. TODD KOTEY No. C44811 Exp. 3/31/22 CIVIL STATE OF CALIFORNIA

PROJECT ENGINEER: D. TODD KOTEY

SANTA CRUZ COUNTY SANITATION DISTRICT
MURRAY STREET BRIDGE
SANITARY SEWER – PIPE SUPPORT DETAILS-2

DRAWN:	DCP
CHECKED:	DTK
DATE:	7/30/2021
SCALE:	AS SHOWN
JOB NO.	234585

SS-10

Jul 30, 2021 – 9:01am
P:\Roseville_Client\Santa Cruz County Sanitation District\SS3-525 – Murray Street Bridge\06 CADD\19-2418-700-CA-SUPPORTS.dwg

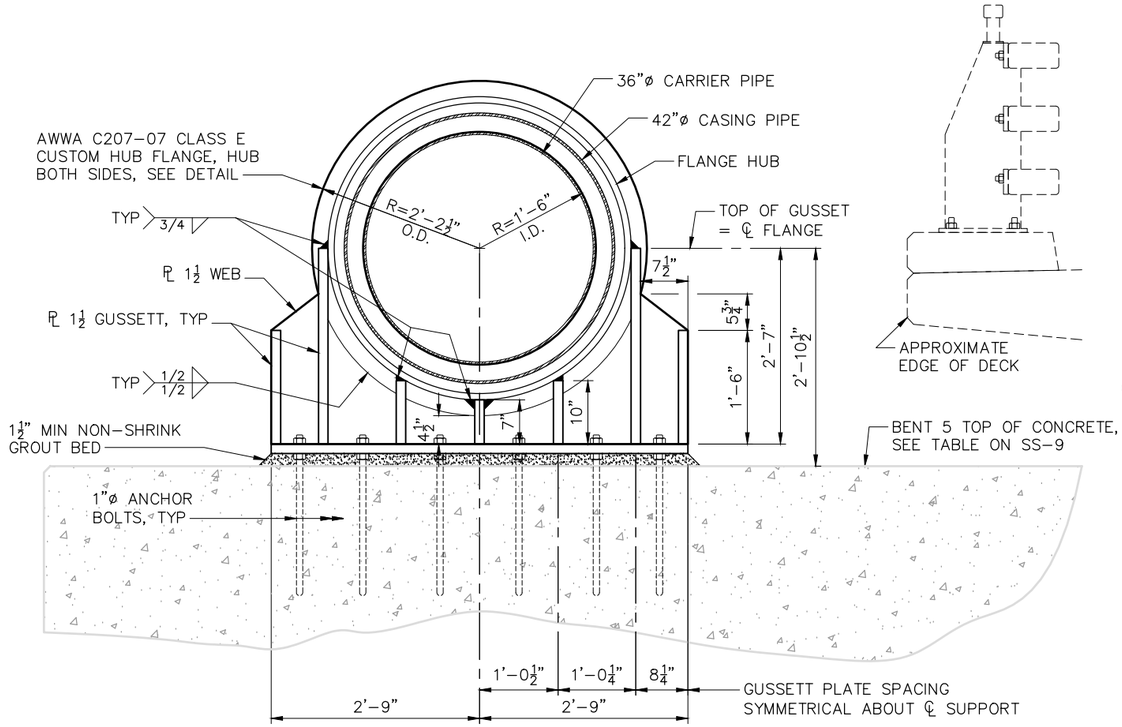

SECTION J-J

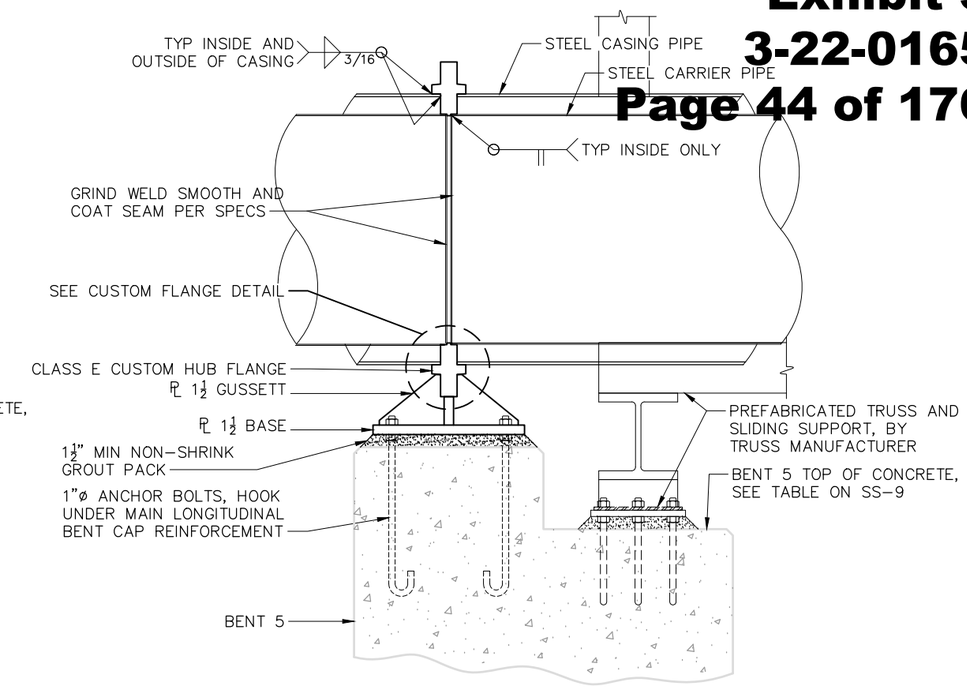

SECTION K-K

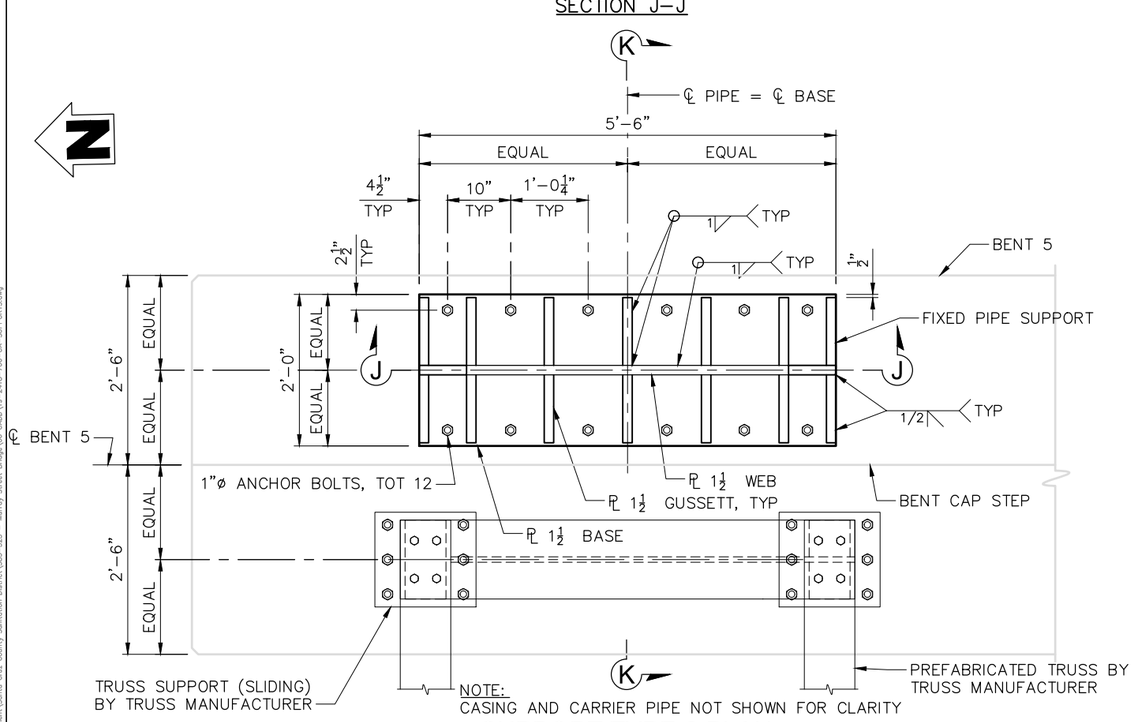

SUPPORT TYPE-3 PLAN
1" = 1'-0"

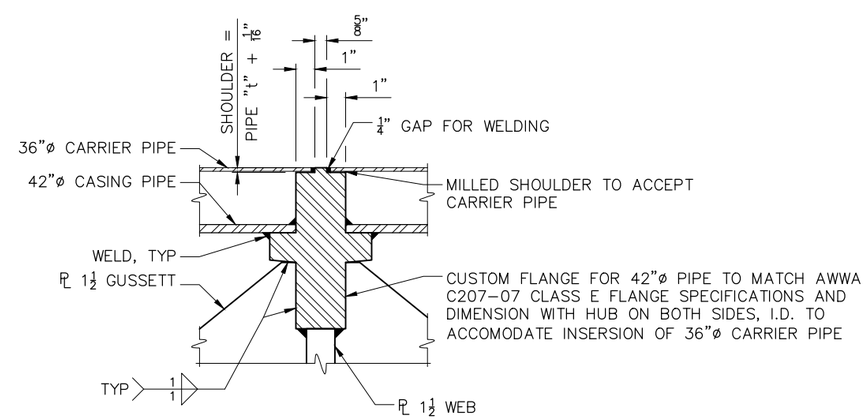

CUSTOM FLANGE DETAIL
3" = 1'-0"

100% SUBMITTAL

FOR REDUCED PLANS ORIGINAL SCALE IN INCHES

SHEET NAME: PIPE SUPPORT DETAILS-3

DRAWING NAME: 19-2418-700-CA-SUPPORTS.DWG

DATE	REVISION	BY

REGISTERED PROFESSIONAL ENGINEER D. TODD KOTEY No. C44811 Exp. 3/31/22 CIVIL STATE OF CALIFORNIA

PROJECT ENGINEER
D. TODD KOTEY

SANTA CRUZ COUNTY SANITATION DISTRICT
MURRAY STREET BRIDGE
SANITARY SEWER – PIPE SUPPORT DETAILS-3

DRAWN:	DCP
CHECKED:	DTK
DATE:	7/30/2021
SCALE:	AS SHOWN
JOB NO.	234585

SS-11

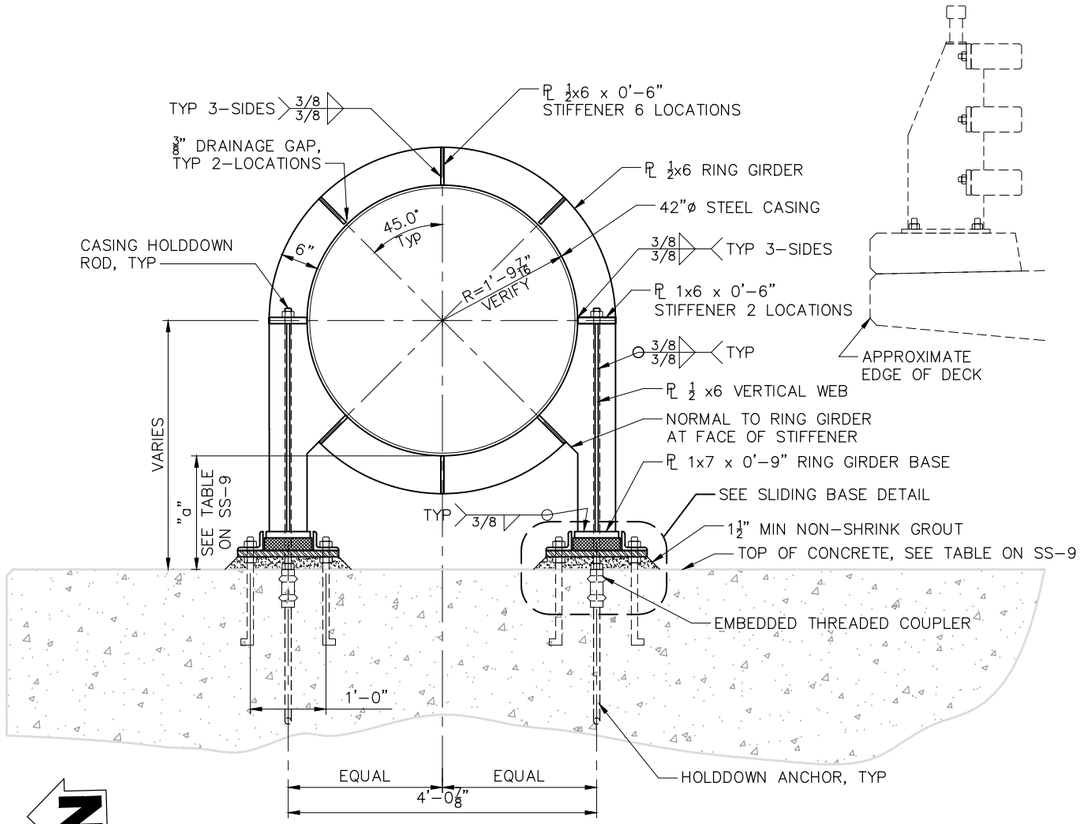

SECTION L-L

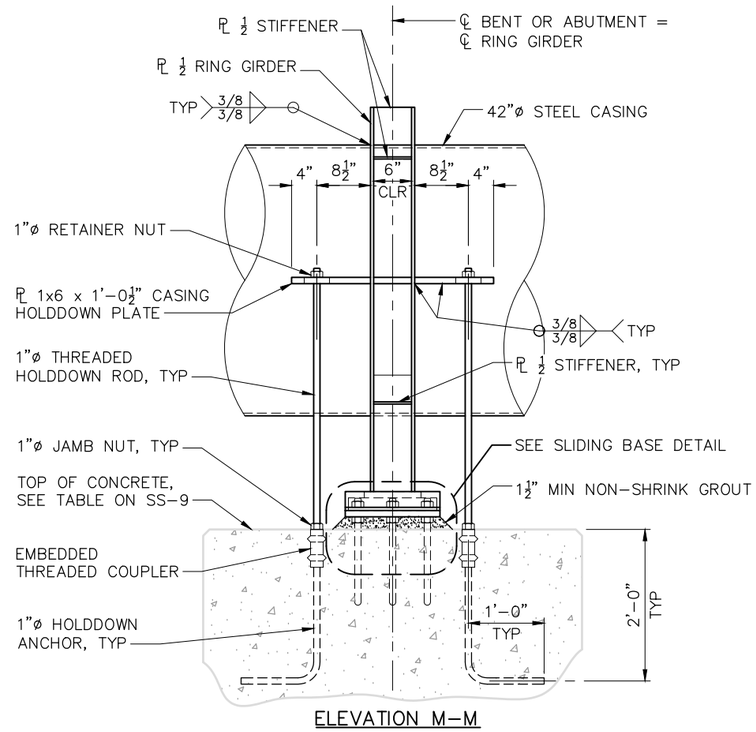

ELEVATION M-M

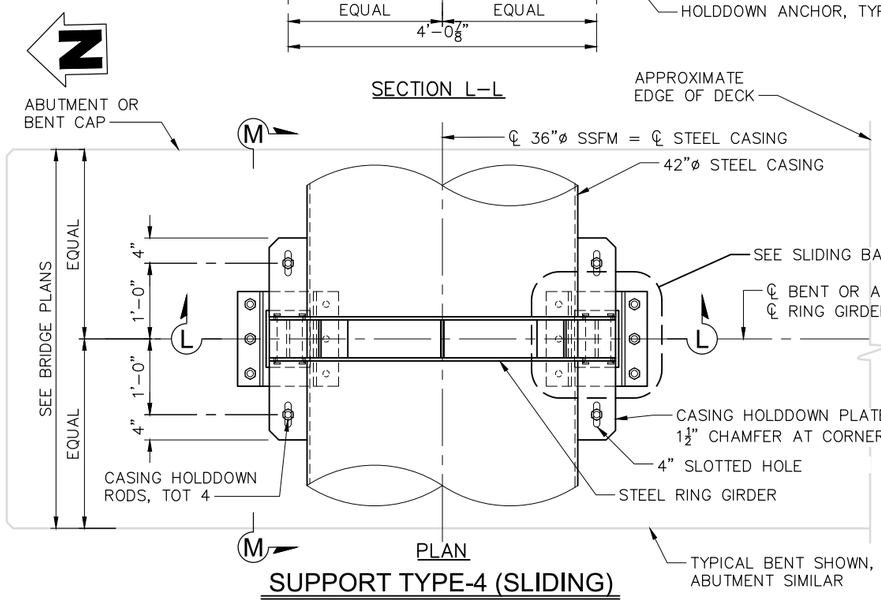

PLAN

SUPPORT TYPE-4 (SLIDING)

1" = 1'-0"

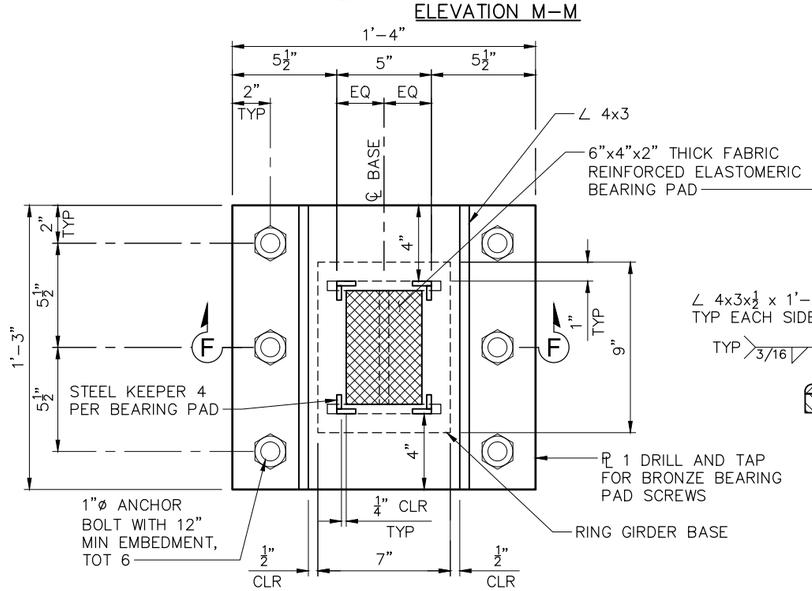

SLIDING BASE DETAIL

3" = 1'-0"

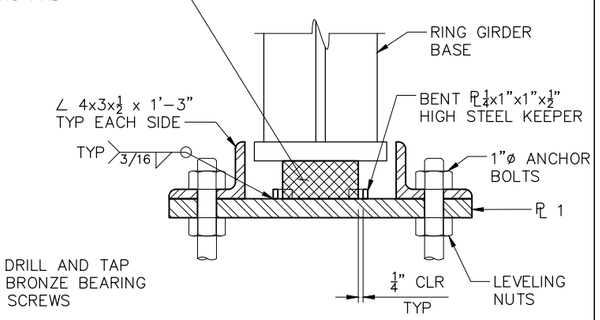

SECTION F-F

NOTES:
1. FOR BENT AND ABUTMENT ELEVATION DATA, SEE TABLE ON SHEET SS-9.

100% SUBMITTAL

FOR REDUCED PLANS ORIGINAL SCALE IN INCHES

SHEET NAME: PIPE SUPPORT DETAILS-4

DRAWING NAME: 19-2418-700-CA-SUPPORTS.DWG

BY	REVISION	DATE

PROFESSIONAL ENGINEER D. TODD KOTEY No. C44811 Exp. 3/31/22 CIVIL STATE OF CALIFORNIA

PROJECT ENGINEER D. TODD KOTEY

SANTA CRUZ COUNTY SANITATION DISTRICT

MURRAY STREET BRIDGE

SANITARY SEWER – PIPE SUPPORT DETAILS-4

DRAWN:	DCP
CHECKED:	DTK
DATE:	7/30/2021
SCALE:	AS SHOWN
JOB NO.	234585

SS-12

Jul 30, 2021 – 9:01am
P:\Roseville_Client\Santa Cruz County Sanitation District\585-525 – Murray Street Bridge\06 CADD\19-2418-700-CA-SUPPORTS.dwg

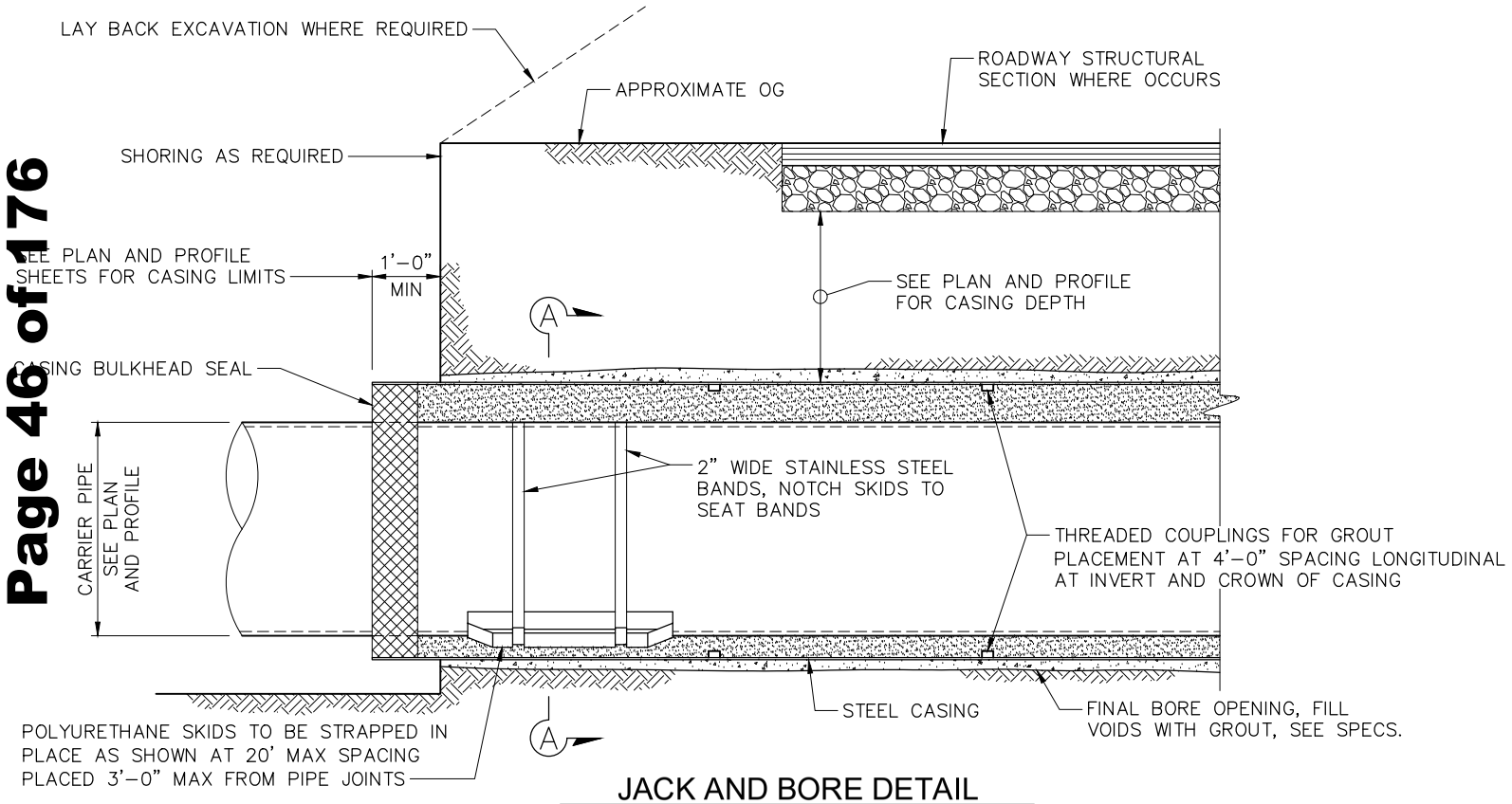

JACK AND BORE DETAIL

SCALE: 3/4" = 1'-0"

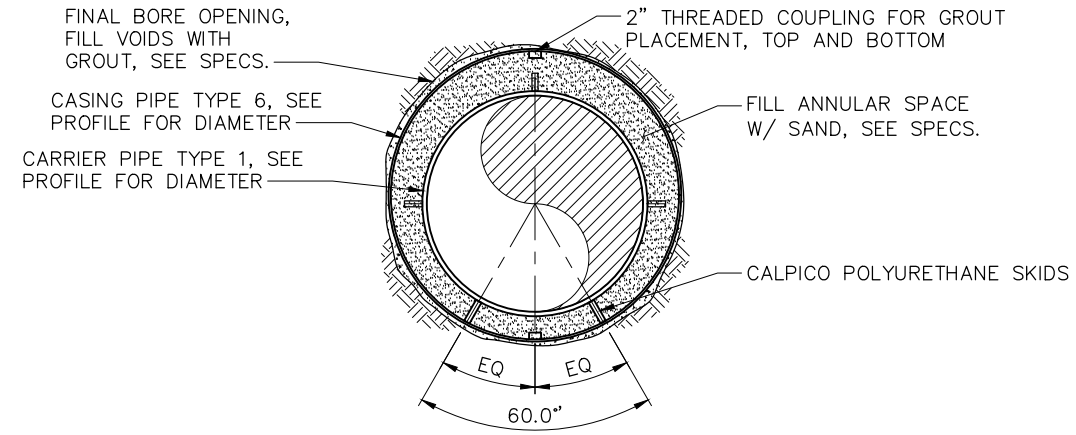

BORE AND JACK SECTION A-A

SCALE: 3/4" = 1'-0"

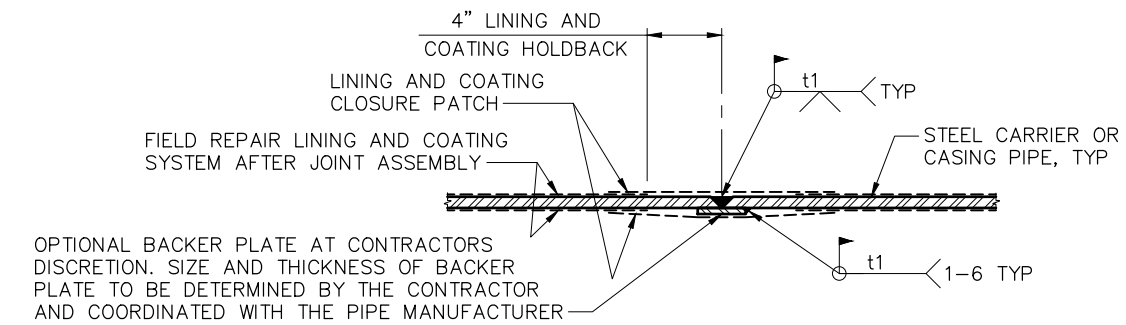

BUTT WELD JOINT DETAIL

NO SCALE

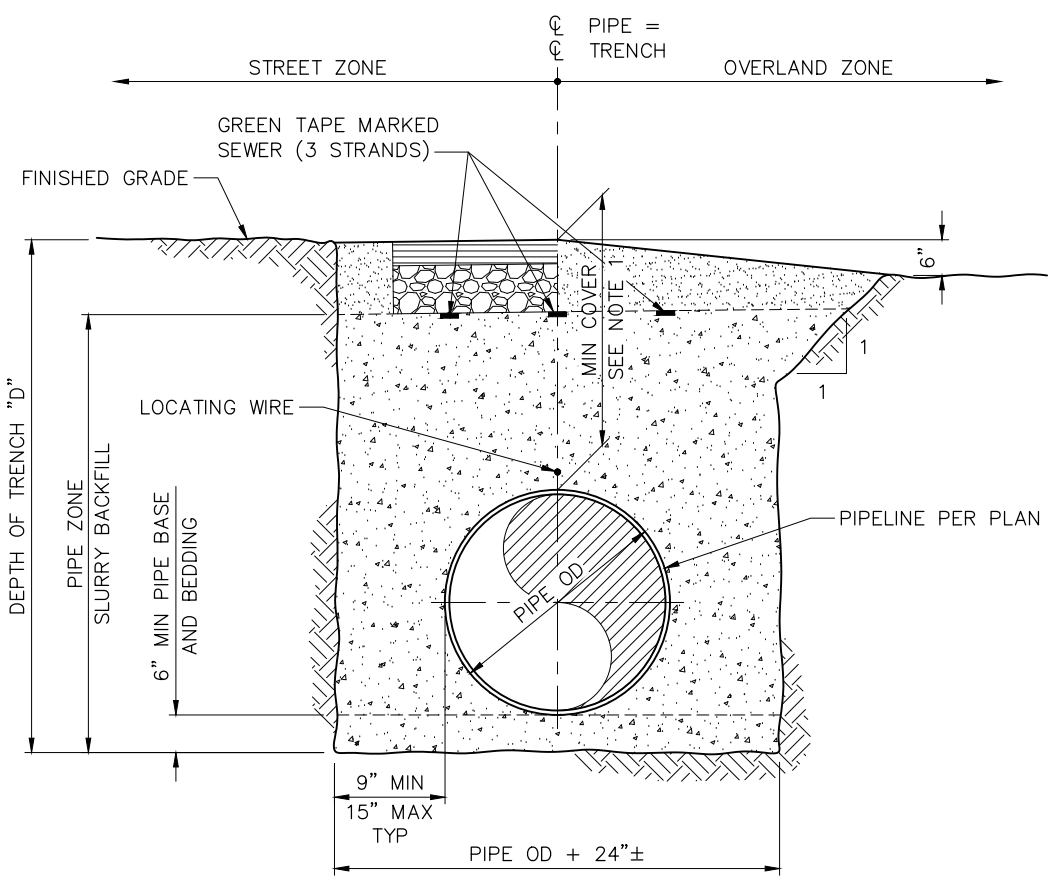

TYPICAL TRENCH DETAIL

NO SCALE

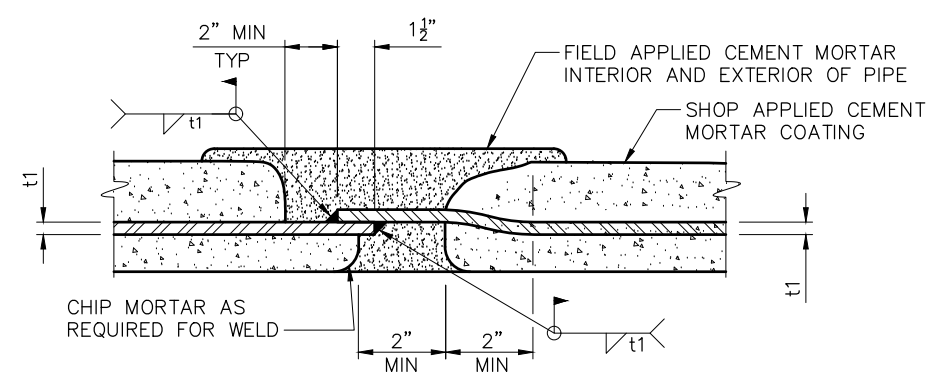

EXPANDED BELL JOINT DETAIL

NO SCALE

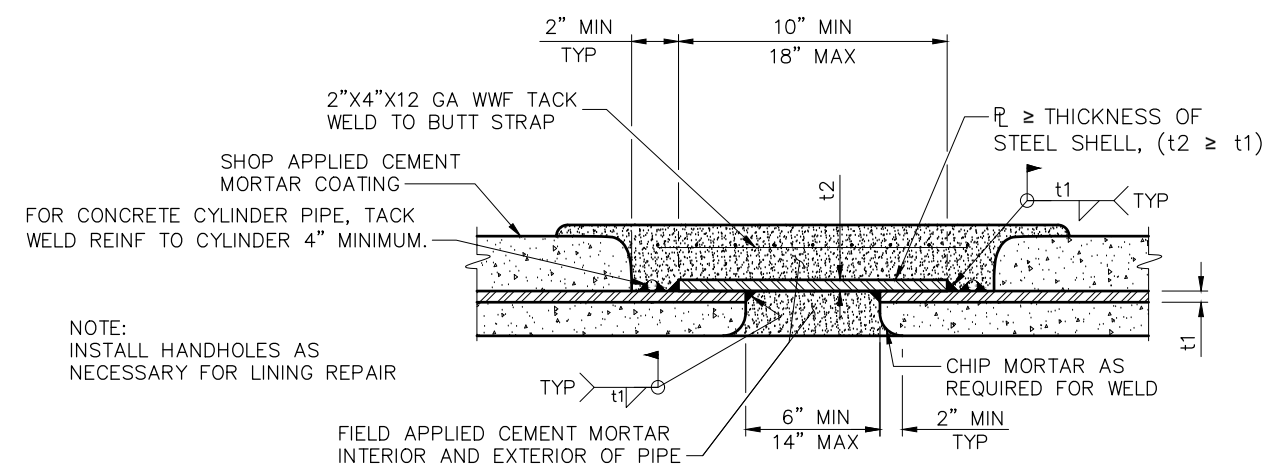

BUTT STRAP JOINT DETAIL

NO SCALE

100% SUBMITTAL

FOR REDUCED PLANS ORIGINAL SCALE IN INCHES

SHEET NAME: PIPELINE BORE AND JACK DETAILS

DRAWING NAME: 19-2418-700-CA-J&B DETAILS.DWG

BY	REVISION	DATE

REGISTERED PROFESSIONAL ENGINEER D. TODD KOTEY No. C44811 Exp. 3/31/22 CIVIL STATE OF CALIFORNIA

PROJECT ENGINEER: D. TODD KOTEY

SANTA CRUZ COUNTY SANITATION DISTRICT

MURRAY STREET BRIDGE

SANITARY SEWER – PIPELINE BORE AND JACK DETAILS

DRAWN:	DCP
CHECKED:	DTK
DATE:	7/30/2021
SCALE:	AS SHOWN
JOB NO.	234585

SS-13

Jul 30, 2021 – 9:11am
P:\Moseville_Client\Santa Cruz County Sanitation District\5835-525 – Murray Street Bridge\06 CADD\19-2418-700-CA-J&B DETAILS.dwg

NOTE:
FOR UTILITY CONFLICTS/RELOCATIONS SEE ROAD PLANS.

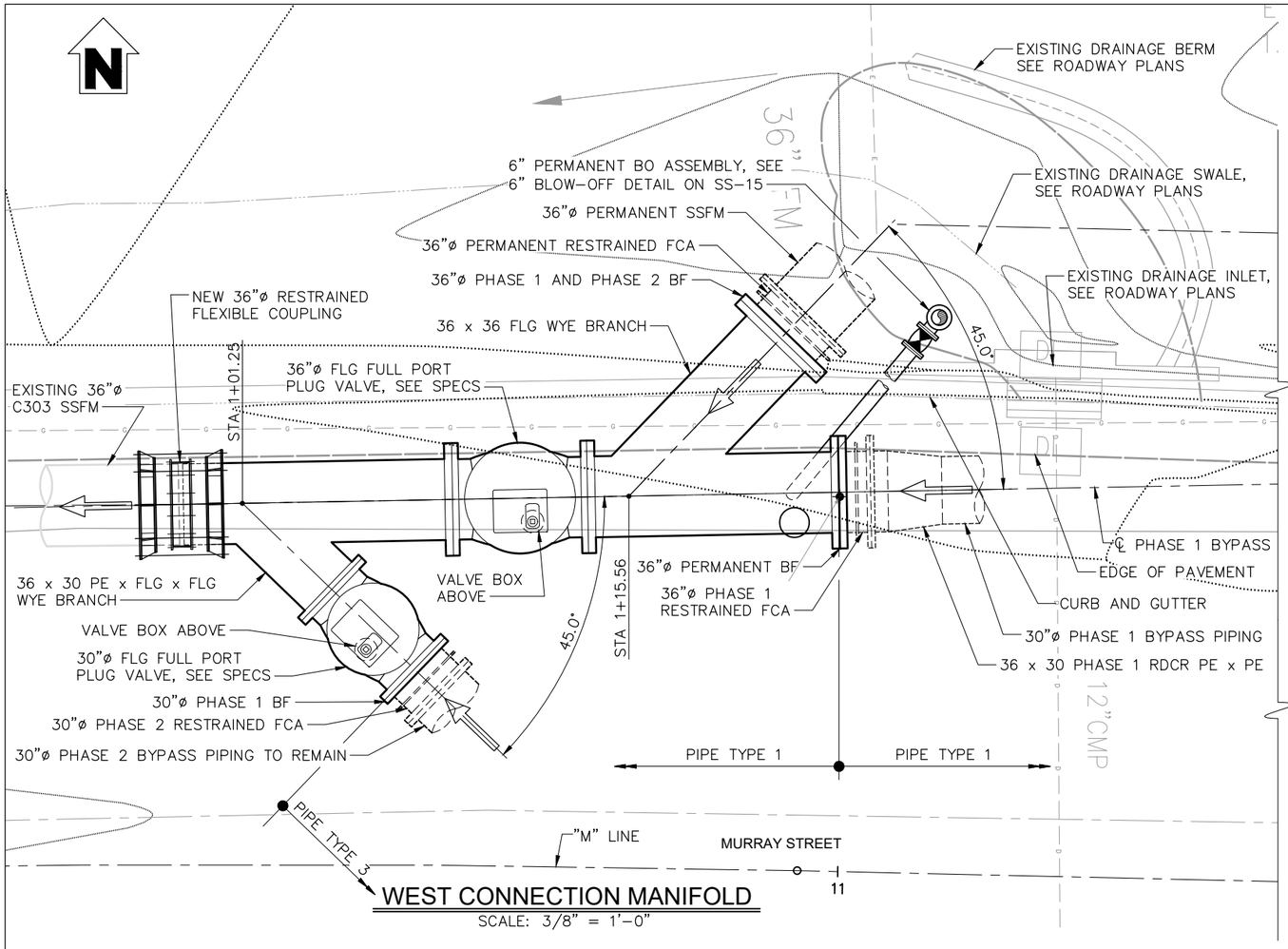

WEST CONNECTION MANIFOLD

SCALE: 3/8" = 1'-0"

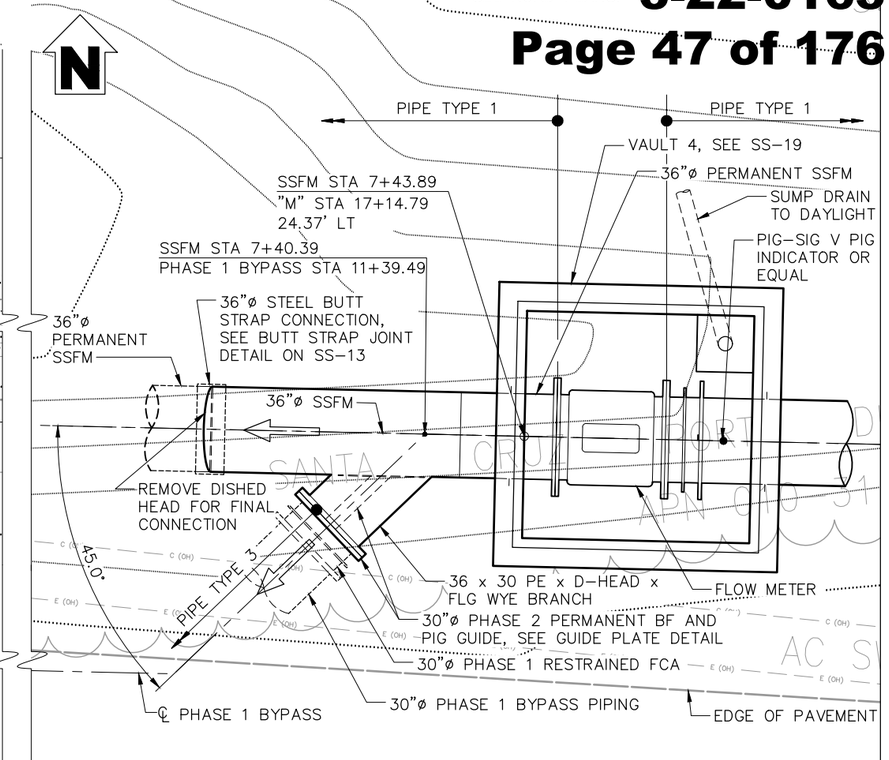

EAST DIVERSION MANIFOLD

SCALE: 3/8" = 1'-0"

ABBREVIATIONS:

BF	=	BLIND FLANGE
BO	=	BLOW OFF
FCA	=	FLANGED COUPLING ADAPTER
FLG	=	FLANGED
PE	=	PLAIN END
RDCR	=	REDUCER

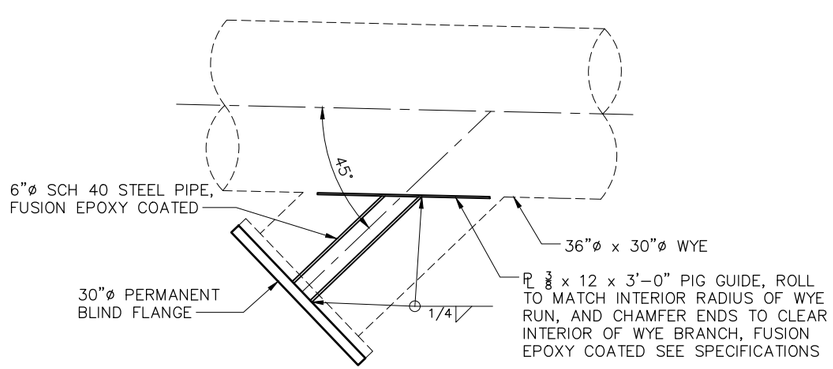

GUIDE PLATE DETAIL

Scale: 3/4" = 1'-0"

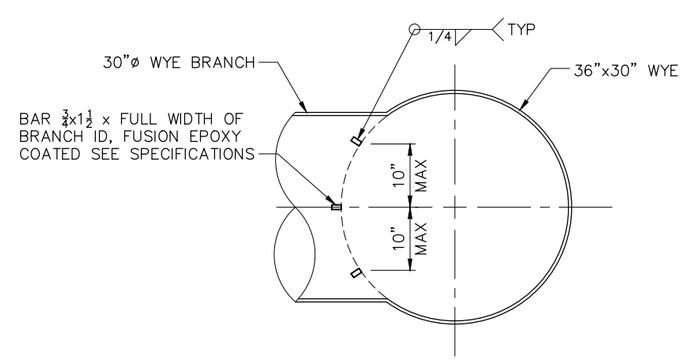

GUIDE BAR DETAIL

Scale: 1" = 1'-0"

100% SUBMITTAL

FOR REDUCED PLANS
ORIGINAL SCALE IN INCHES

SHEET NAME: MANIFOLD DETAILS-1

DRAWING NAME: 19-2418-700-CA-J&B DETAILS.DWG

BY	REVISION	DATE

REGISTERED PROFESSIONAL ENGINEER D. TODD KOTEY No. C44811 Exp. 3/31/22 CIVIL STATE OF CALIFORNIA

PROJECT ENGINEER: D. TODD KOTEY

SANTA CRUZ COUNTY SANITATION DISTRICT
MURRAY STREET BRIDGE
SANITARY SEWER - MANIFOLD DETAILS-1

DRAWN:	DCP
CHECKED:	DTK
DATE:	7/30/2021
SCALE:	AS SHOWN
JOB NO.	234585

SS-14

Jul 30, 2021 - 9:01am
P:\Roseville_Client\Santa Cruz County Sanitation District\583-525 - Murray Street Bridge\06 CADD\19-2418-700-CA-J&B DETAILS.dwg

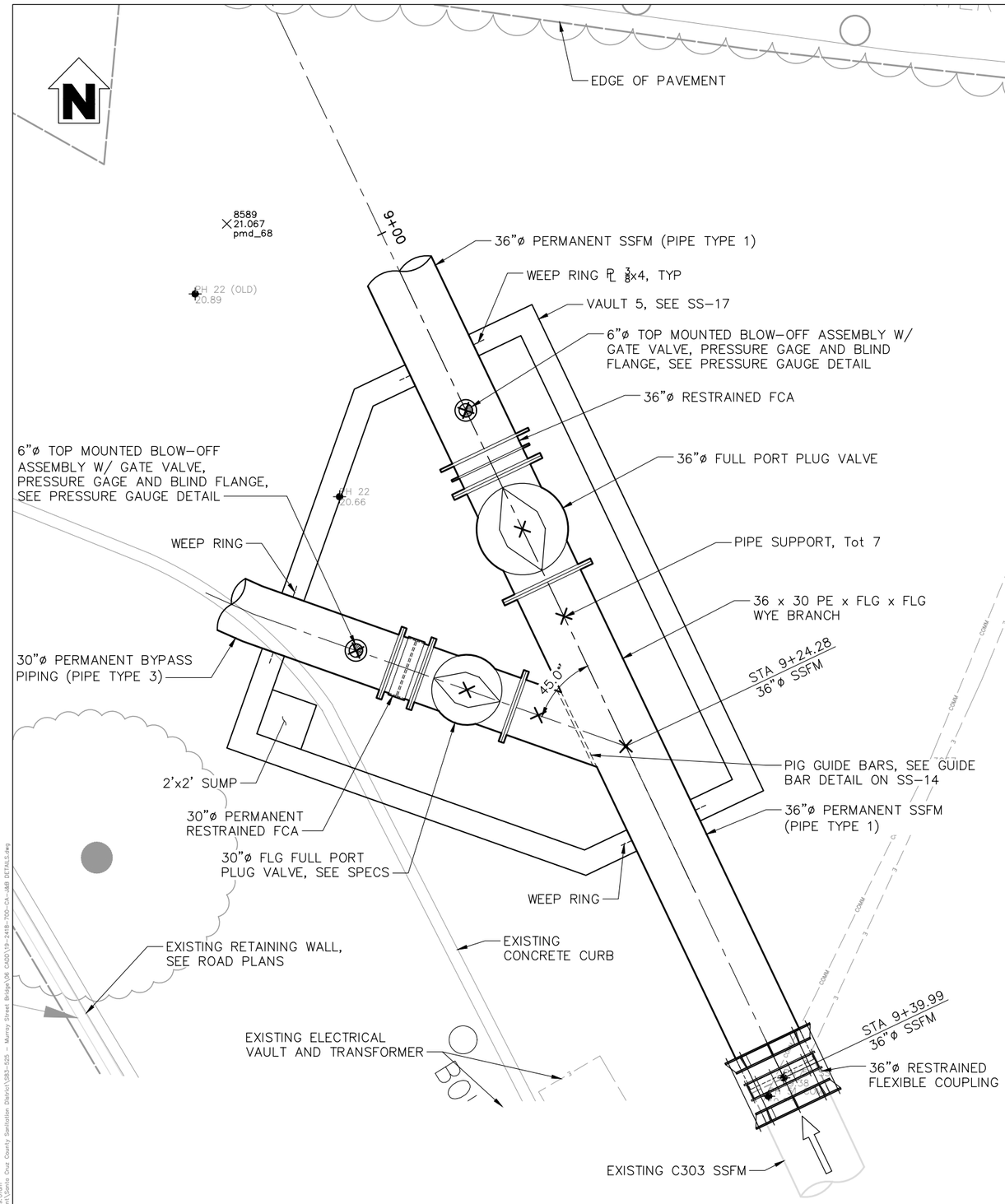

SOUTH CONNECTION MANIFOLD PLAN

SCALE: 3/8" = 1'-0"

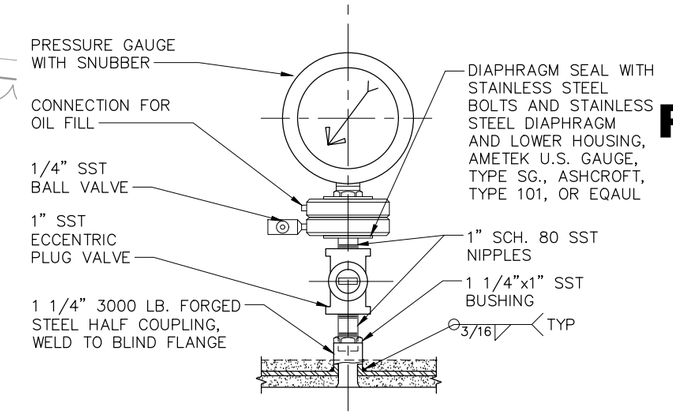

PRESSURE GUAGE DETAIL

Scale: NTS

NOTES:
1. FOR UTILITY CONFLICTS/RELOCATIONS SEE ROAD PLANS.
2. SEE SHEET SS-17 FOR [illegible] VAULT PLAN.

ABBREVIATIONS:

BF	=	BLIND FLANGE
BO	=	BLOW OFF
FCA	=	FLANGED COUPLING ADAPTER
FLG	=	FLANGED
PE	=	PLAIN END
RDCR	=	REDUCER

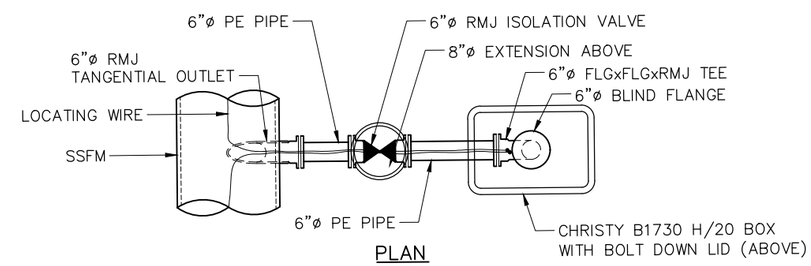

PLAN

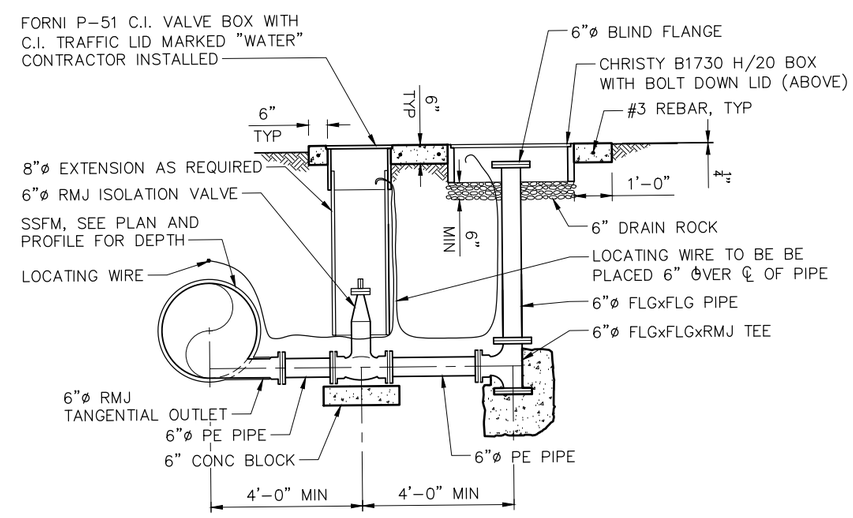

SECTION

NOTE:
1. FOR PIPE AND APPURTENANCE TYPE, SEE PIPE SCHEDULE.
2. PIPE SPOOL LENGTH MAY BE INCREASED DUE TO FIELD CONDITIONS WITH ENGINEER APPROVAL.
3. OMIT FLANGES ON PIPES LESS THAN 2" OR 3" AND USE THREAD.
4. ALL PIPE SPOOLS BELOW GRADE SHALL BE SCH 80 FEL&C.

6" BLOW OFF DETAIL

SCALE: 1/2" = 1'-0"

100% SUBMITTAL

FOR REDUCED PLANS ORIGINAL SCALE IN INCHES

SHEET NAME: MANIFOLD DETAILS-2

DRAWING NAME: 19-2418-700-CA-J&B DETAILS.DWG

BY	REVISION	DATE

REGISTERED PROFESSIONAL ENGINEER D. TODD KOTEY No. C44811 Exp. 3/31/22 CIVIL STATE OF CALIFORNIA

PROJECT ENGINEER: D. TODD KOTEY

SANTA CRUZ COUNTY SANITATION DISTRICT
MURRAY STREET BRIDGE
SANITARY SEWER – MANIFOLD DETAILS-2

DRAWN:	DCP
CHECKED:	DTK
DATE:	7/30/2021
SCALE:	3/8" = 1'-0"
JOB NO.	234585

SS-15

Jul 30, 2021 - 9:10am
P:\Roseville_Cities\Santa Cruz County Sanitation District\585-525 - Murray Street Bridge\06 CADD\19-2418-700-CA-J&B DETAILS.dwg

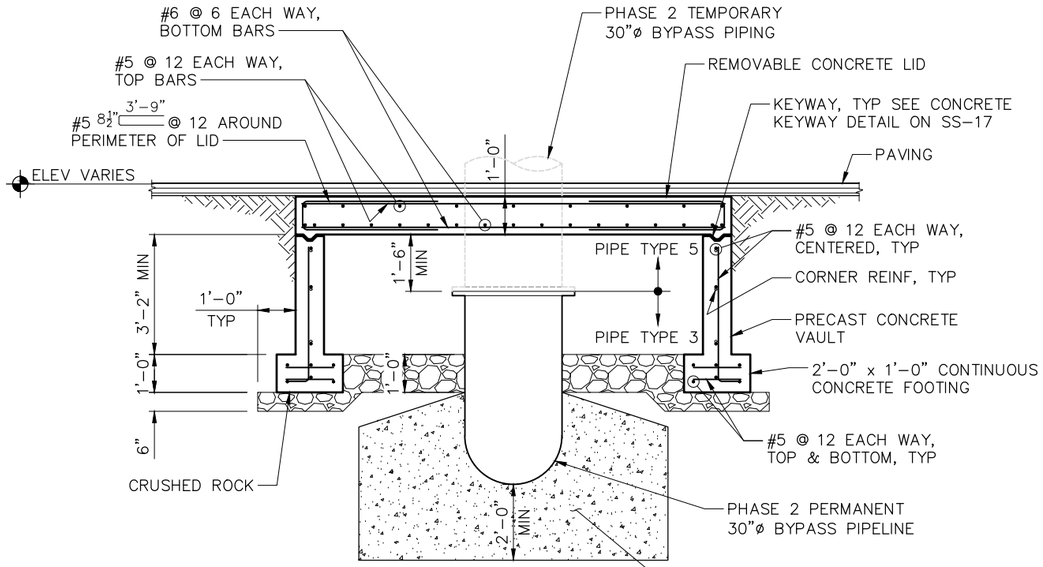

SECTION A-A
SCALE: 1/2" = 1'-0"

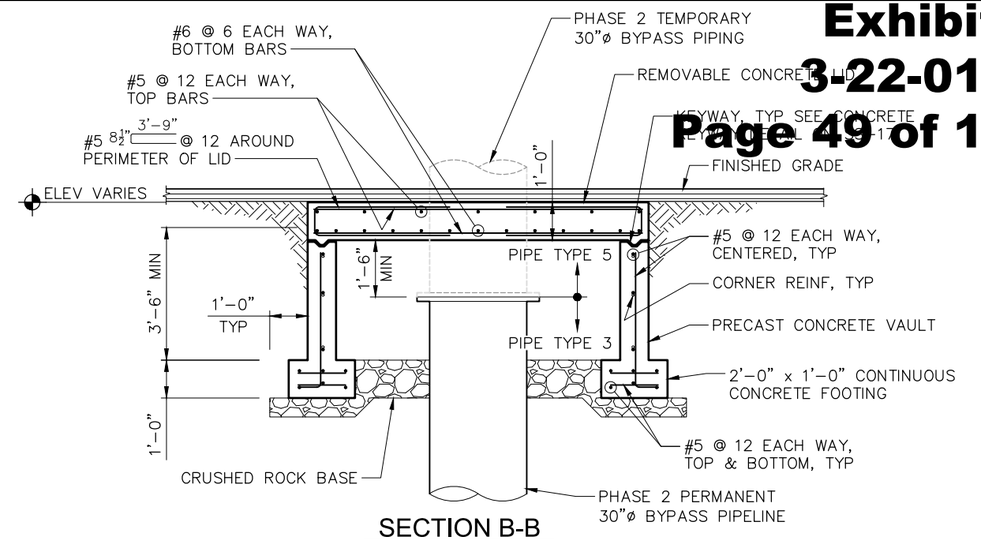

SECTION B-B
SCALE: 1/2" = 1'-0"

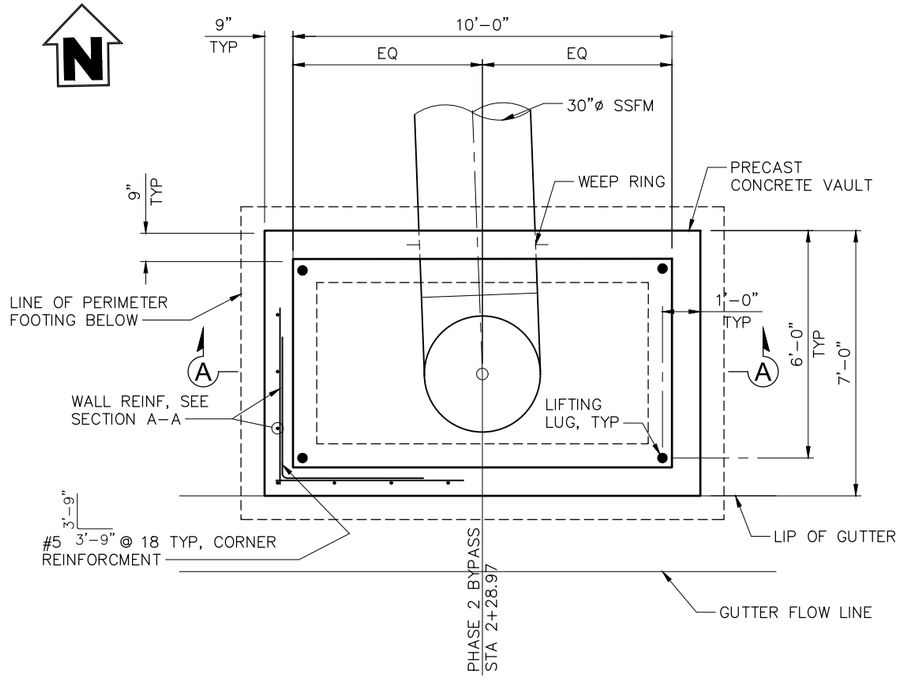

VAULT-1 PLAN
SCALE: 1/2" = 1'-0"

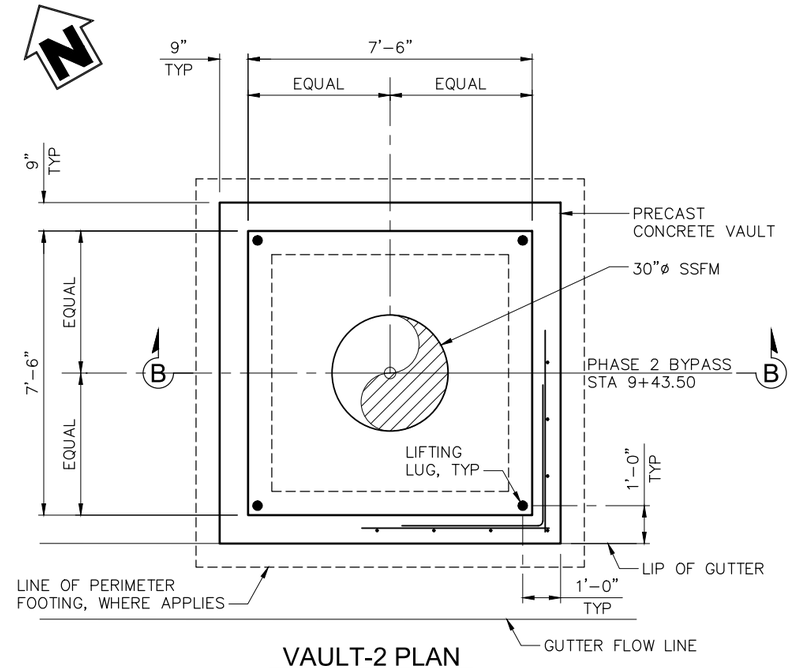

VAULT-2 PLAN
SCALE: 1/2" = 1'-0"

NOTE:
FOR LIFTING LUG DETAIL, SEE SHEET SS-19

100% SUBMITTAL

FOR REDUCED PLANS ORIGINAL SCALE IN INCHES		SHEET NAME: VAULT DETAILS-1	DRAWING NAME: 19-2418-700-CA-VAULTS.DWG

BY	REVISION	DATE

REGISTERED PROFESSIONAL ENGINEER D. TODD KOTEY No. C44811 Exp. 3/31/22 CIVIL STATE OF CALIFORNIA

PROJECT ENGINEER
D. TODD KOTEY

SANTA CRUZ COUNTY SANITATION DISTRICT
MURRAY STREET BRIDGE
SANITARY SEWER – VAULT DETAILS-1

DRAWN:	DCP
CHECKED:	DTK
DATE:	7/30/2021
SCALE:	SCALE
JOB NO.	234585

SS-16

Jul 30, 2021 – 9:01am
P:\Roseville_Client\Santa Cruz County Sanitation District\583-525 – Murray Street Bridge\06 CADD\19-2418-700-CA-VAULTS.dwg

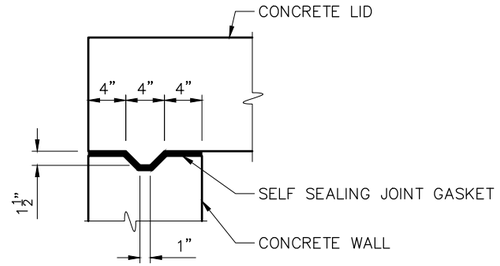

CONCRETE KEYWAY DETAIL

SCALE: 3" = 1'-0"

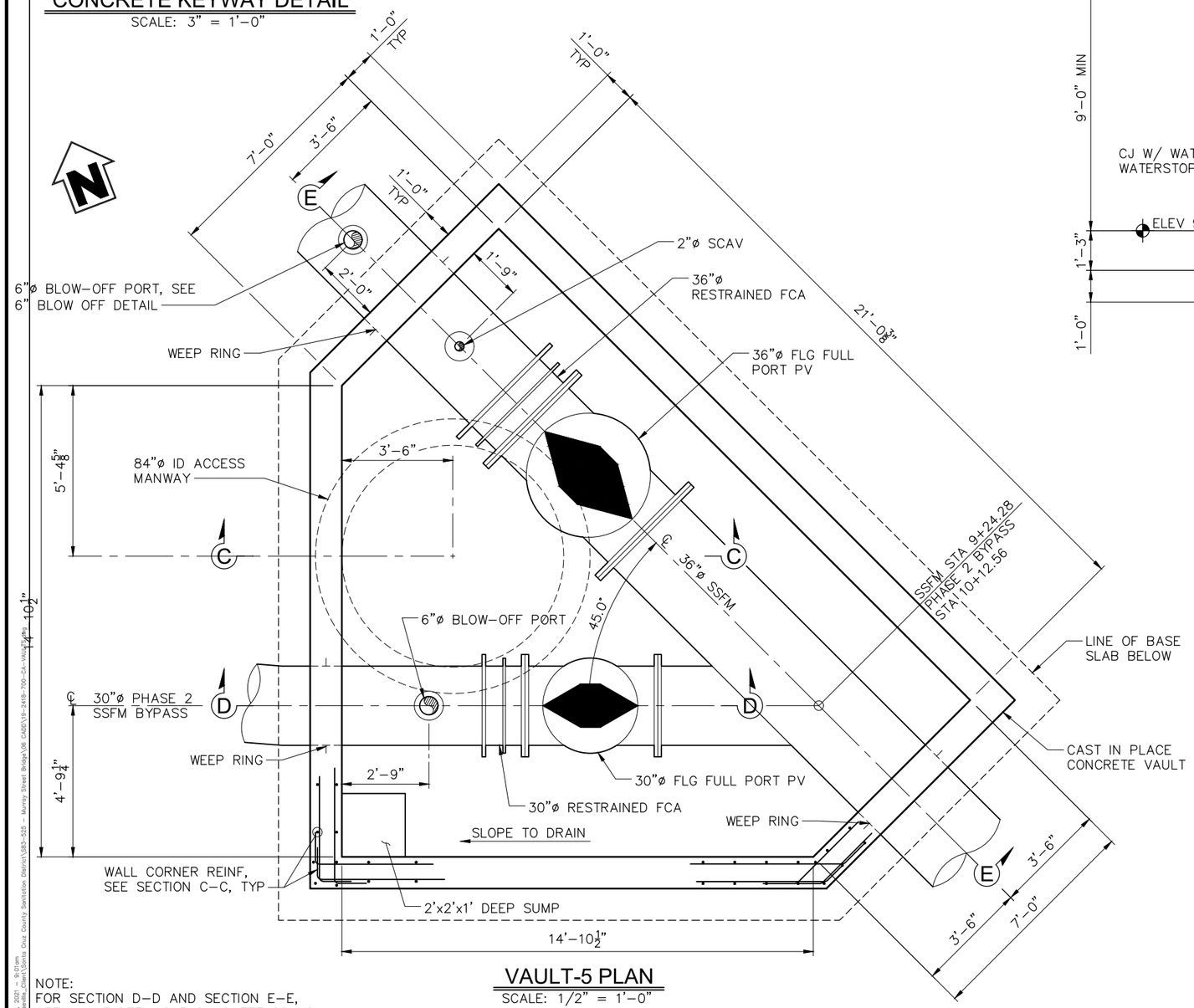

VAULT-5 PLAN

SCALE: 1/2" = 1'-0"

NOTE:
FOR SECTION D-D AND SECTION E-E, SEE VAULT DETAILS 3 ON SHEET SS-18.

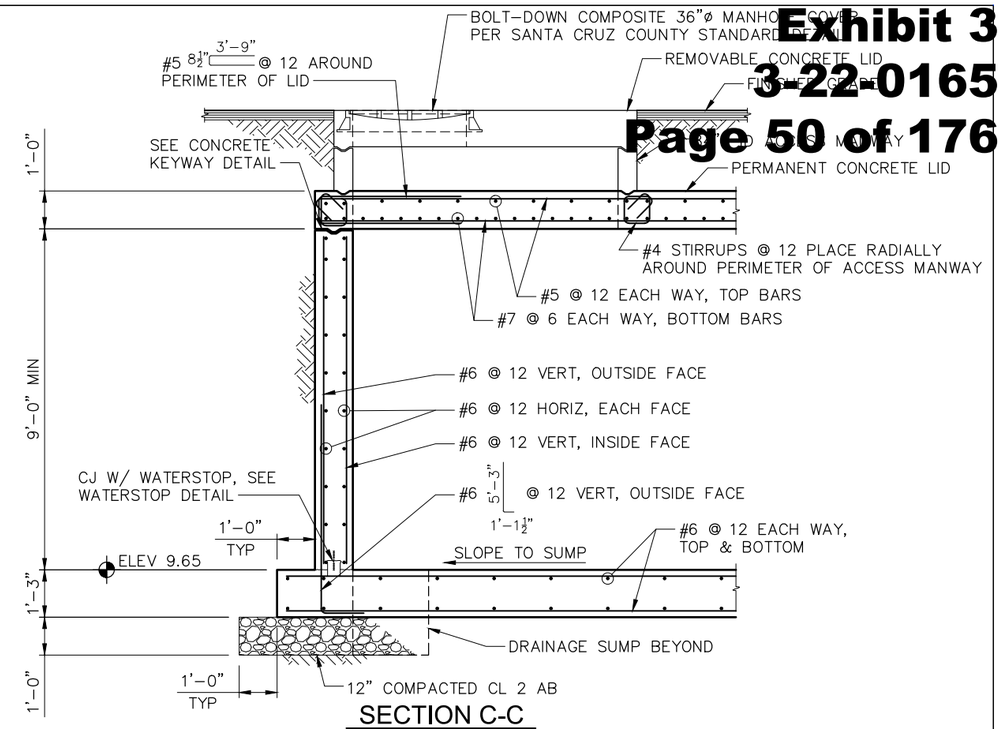

SECTION C-C

SCALE: 1/2" = 1'-0"

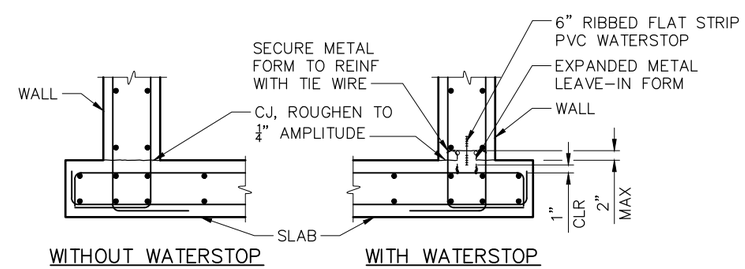

CONSTRUCTION JOINT DETAIL

SCALE: 3/4" = 1'-0"

100% SUBMITTAL

FOR REDUCED PLANS ORIGINAL SCALE IN INCHES

SHEET NAME: VAULT DETAILS-2

DRAWING NAME: 19-2418-700-CA-VAULTS.DWG

BY	REVISION	DATE

PROFESSIONAL ENGINEER REGISTERED D. TODD KOTEY No. C44811 Exp. 3/31/22 CIVIL STATE OF CALIFORNIA

PROJECT ENGINEER D. TODD KOTEY

SANTA CRUZ COUNTY SANITATION DISTRICT
MURRAY STREET BRIDGE
SANITARY SEWER – VAULT DETAILS-2

DRAWN:	DCP
CHECKED:	DTK
DATE:	7/30/2021
SCALE:	SCALE
JOB NO.	234585

SS-17

Jul 30, 2021 – 9:01am
P:\Visalia_Client\Santa Cruz County Sanitation District\383-525 – Murray Street Bridge\06 CADD\19-2418-700-CA-VAULTS.dwg

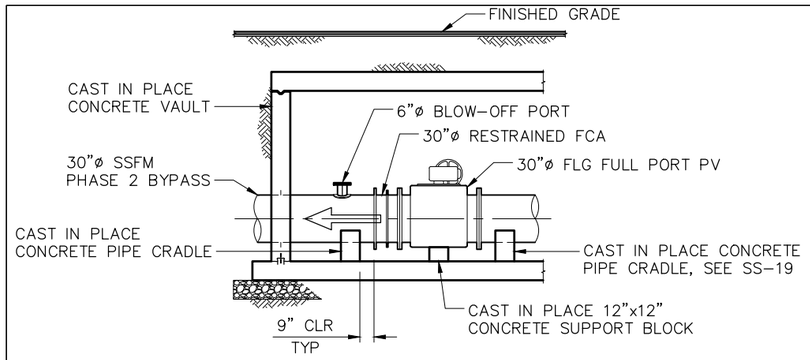

NOTE:
FOR VAULT DETAILS NOT SHOWN, SEE SECTION C-C ON SHT SS-17

SECTION D-D
SCALE: 1/4" = 1'-0"

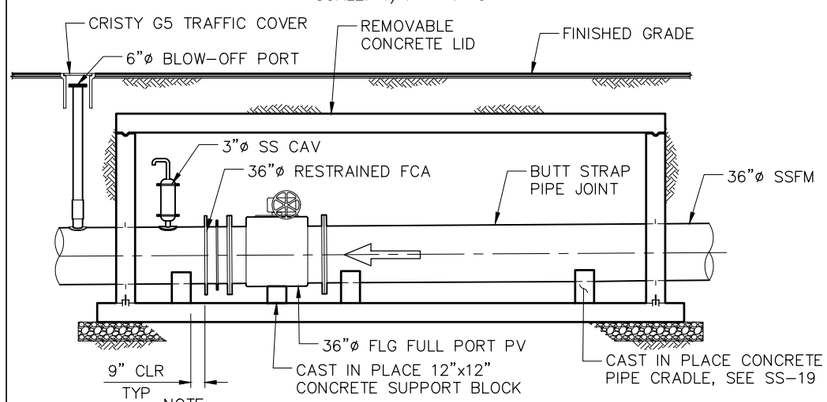

NOTE:
FOR VAULT DETAILS NOT SHOWN, SEE SECTION C-C ON SHT SS-17

SECTION E-E
SCALE: 1/4" = 1'-0"

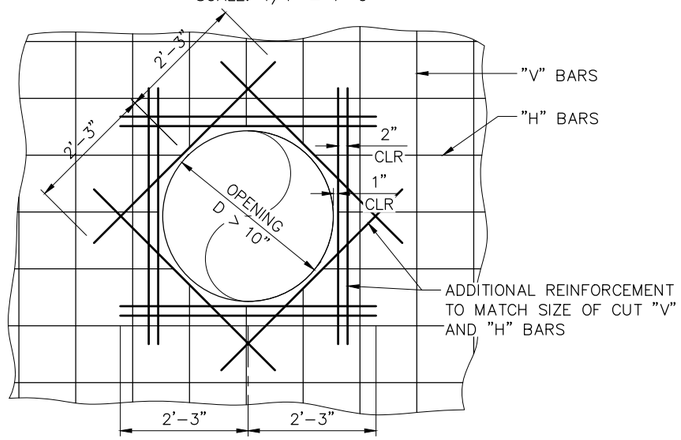

NOTES:
1. IF "D" IS < 10" ADJUST BAR SPACING AROUND OPENING, NO CUT BARS
2. ADDITIONAL BARS SIZES TO MATCH THOS OF THE CUT BARS.
3. IF OPENING IS CLOSER THAN 18" TO INTERSECTING WALL OR SLAB, OMIT DIAGONALS ON THAT SIDE.
4. IF OPENING IS TOO CLOSE TO END OF WALL OR SLAB TO PROVIDE SPECIFIED LENGTH, THEN PROVIDE 180° STANDARD HOOK INSTEAD.

TYPICAL CIRCULAR OPENING REINFORCEMENT DETAIL
SCALE: 1" = 1'-0"

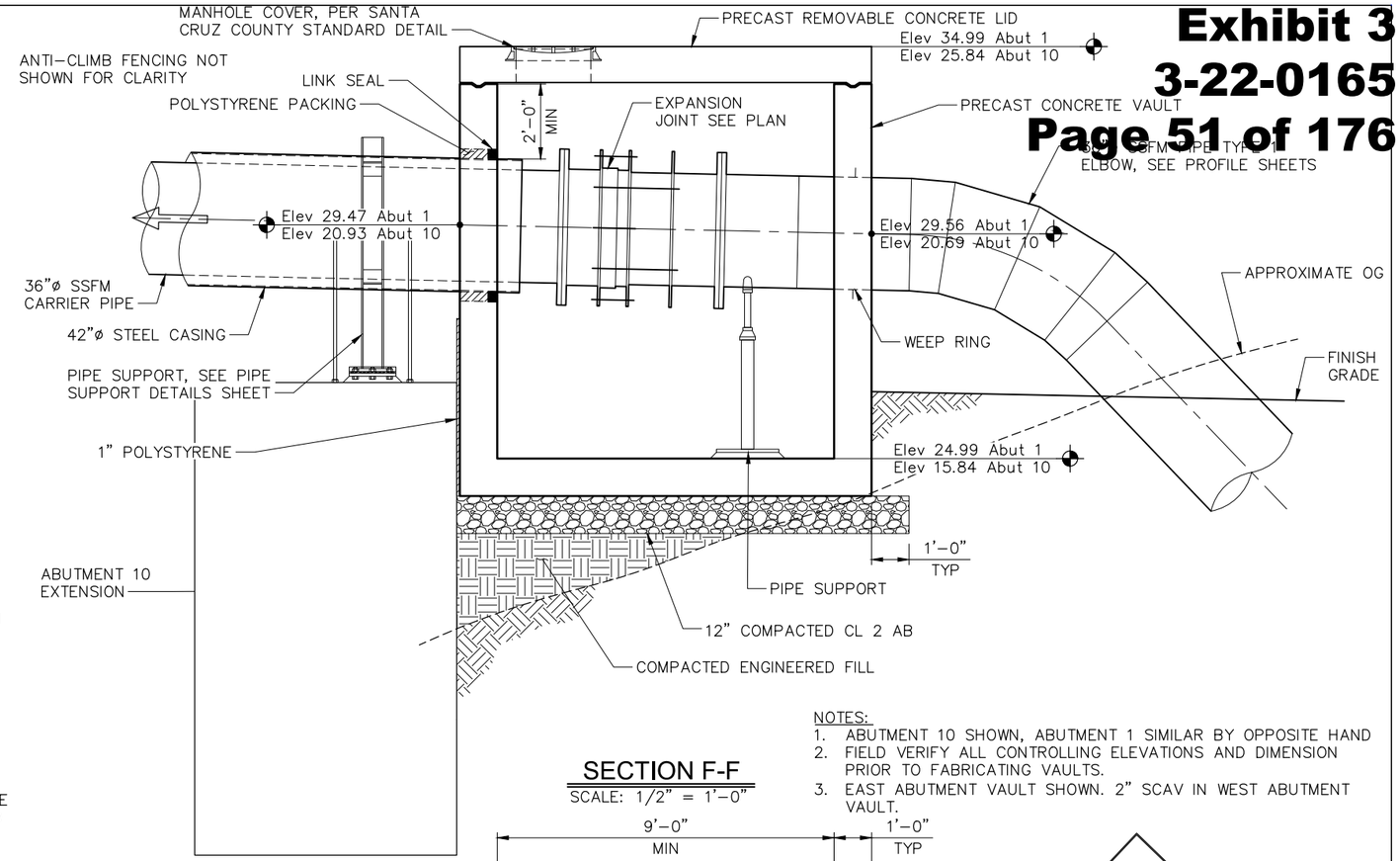

NOTES:
1. ABUTMENT 10 SHOWN, ABUTMENT 1 SIMILAR BY OPPOSITE HAND
2. FIELD VERIFY ALL CONTROLLING ELEVATIONS AND DIMENSION PRIOR TO FABRICATING VAULTS.
3. EAST ABUTMENT VAULT SHOWN. 2" SCAV IN WEST ABUTMENT VAULT.

SECTION F-F
SCALE: 1/2" = 1'-0"

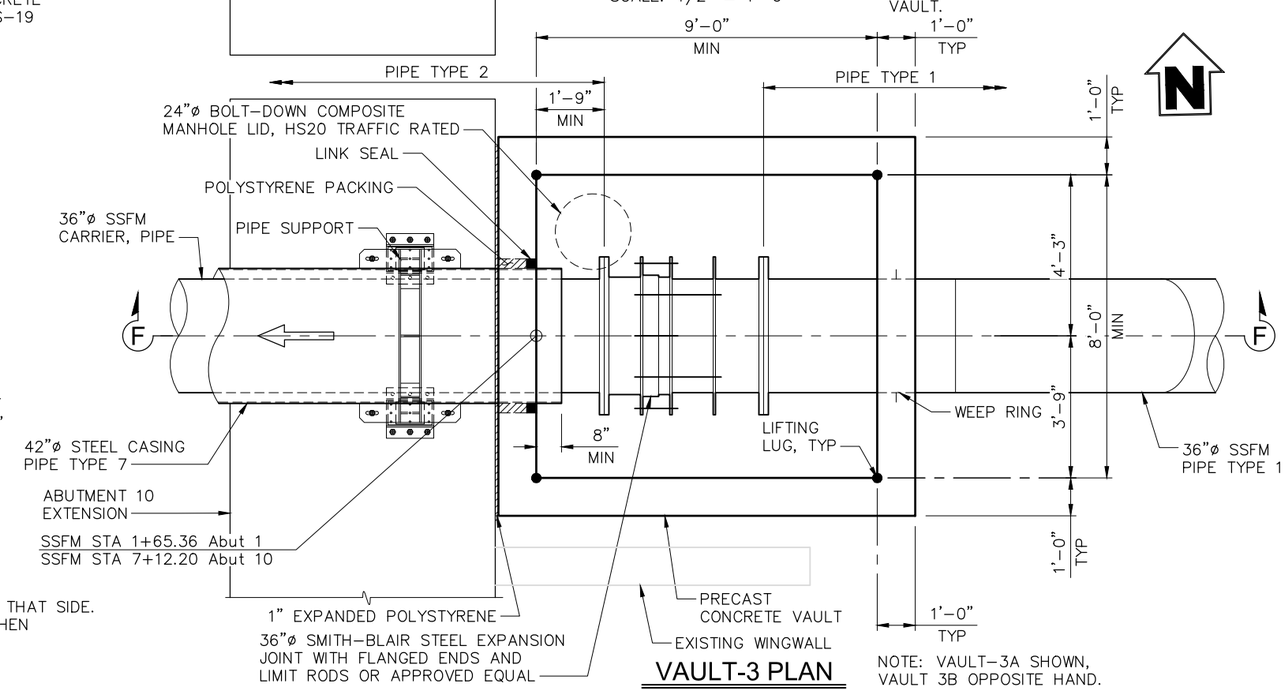

VAULT-3 PLAN
SCALE: 1/2" = 1'-0"

NOTE: VAULT-3A SHOWN, VAULT 3B OPPOSITE HAND.

100% SUBMITTAL

FOR REDUCED PLANS ORIGINAL SCALE IN INCHES 0 1 2 3

SHEET NAME: VAULT DETAILS-3

DRAWING NAME: 19-2418-700-CA-VAULTS.DWG

BY	REVISION	DATE

PROFESSIONAL ENGINEER D. TODD KOTEY No. C44811 Exp. 3/31/22 CIVIL STATE OF CALIFORNIA

PROJECT ENGINEER D. TODD KOTEY

SANTA CRUZ COUNTY SANITATION DISTRICT
MURRAY STREET BRIDGE
SANITARY SEWER – VAULT DETAILS-3

DRAWN:	DCP
CHECKED:	DTK
DATE:	7/30/2021
SCALE:	SCALE
JOB NO.	234585

SS-18

Jul 30, 2021 – 9:03am
P:\Waterlife_Client\Santa Cruz County Sanitation District\383-525 – Murray Street Bridge\06 CADD\19-2418-700-CA-VAULTS.dwg

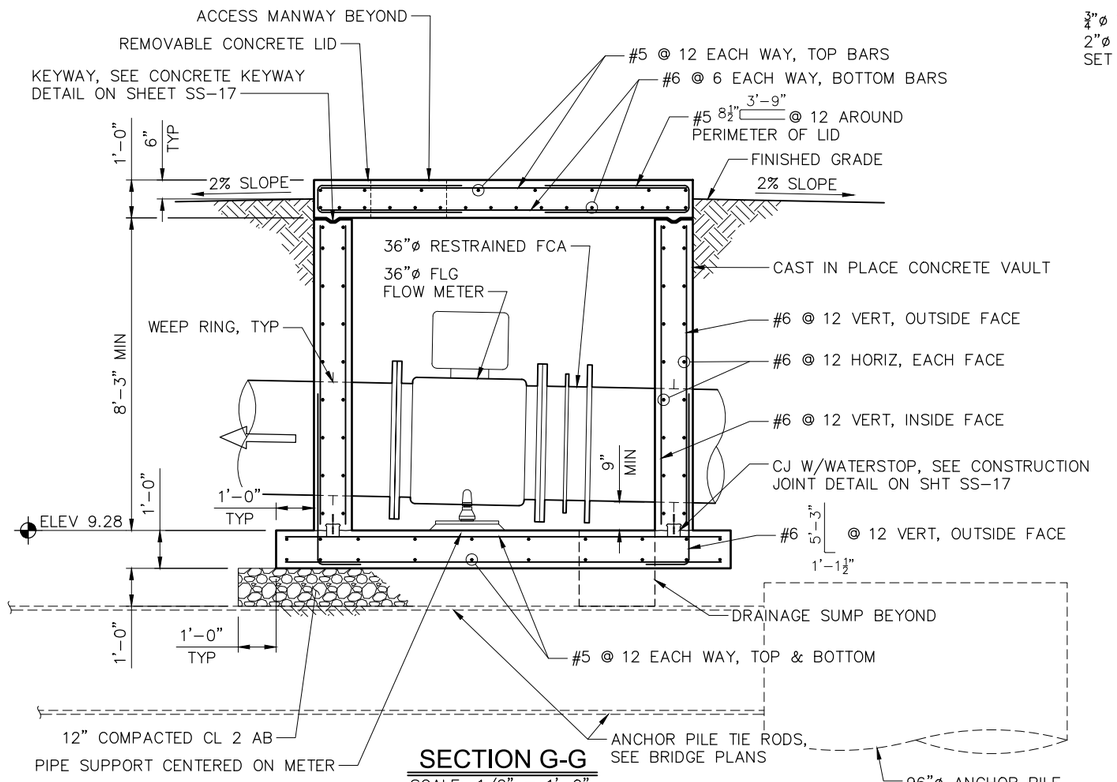

SECTION G-G
SCALE: 1/2" = 1'-0"

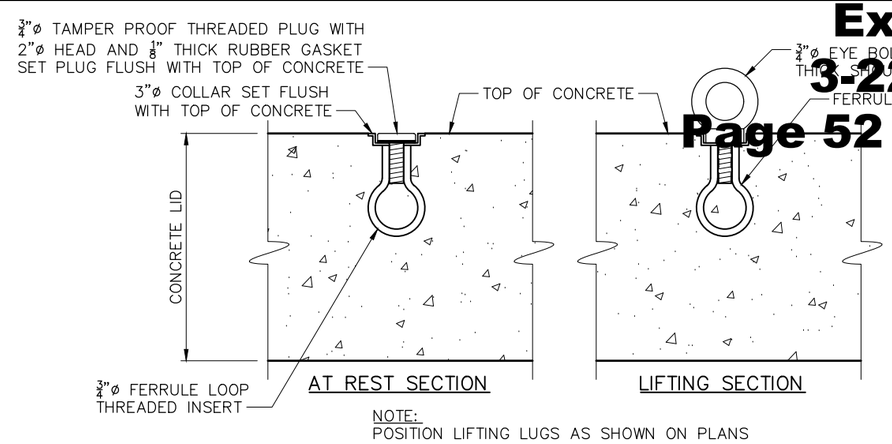

NOTE:
POSITION LIFTING LUGS AS SHOWN ON PLANS

LIFTING LUG DETAIL
SCALE: 3" = 1'-0"

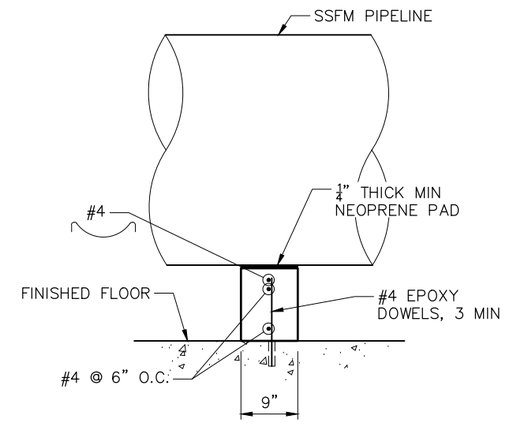

SECTION H-H

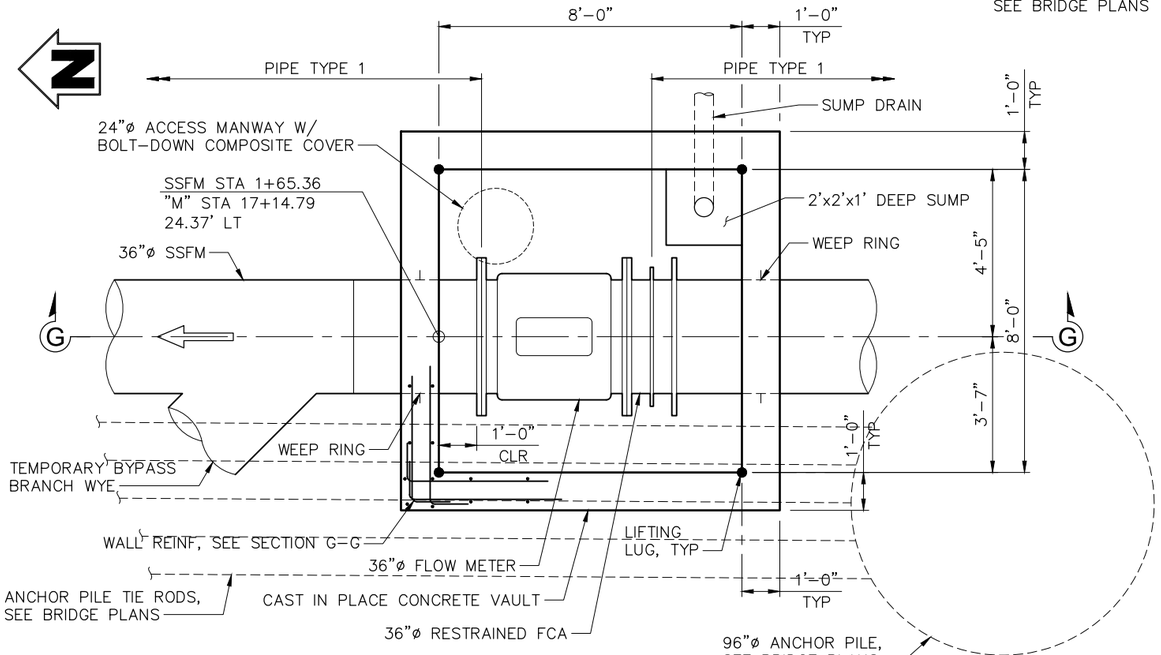

VAULT-4 PLAN
SCALE: 1/2" = 1'-0"

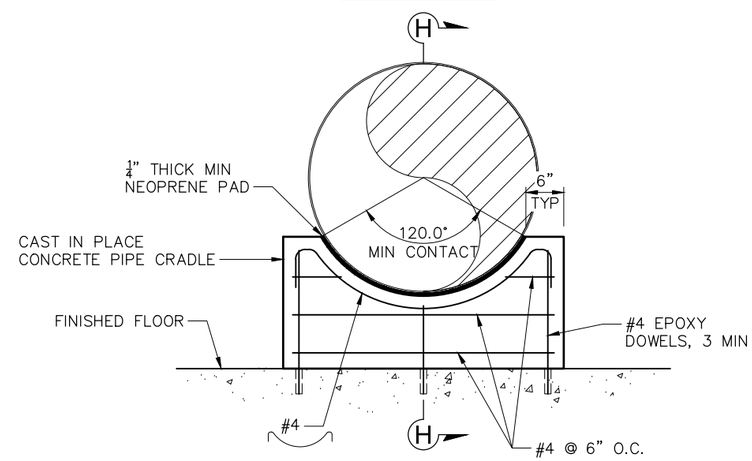

PIPE CRADLE DETAIL
SCALE: 1" = 1'-0"

100% SUBMITTAL

FOR REDUCED PLANS ORIGINAL SCALE IN INCHES

SHEET NAME: VAULT DETAILS-4

DRAWING NAME: 19-2418-700-CA-VAULTS.DWG

BY	REVISION	DATE

REGISTERED PROFESSIONAL ENGINEER D. TODD KOTEY No. C44811 Exp. 3/31/22 CIVIL STATE OF CALIFORNIA

PROJECT ENGINEER
D. TODD KOTEY

SANTA CRUZ COUNTY SANITATION DISTRICT
MURRAY STREET BRIDGE
SANITARY SEWER – VAULT DETAILS-4

DRAWN:	DCP
CHECKED:	DTK
DATE:	7/30/2021
SCALE:	AS SHOWN
JOB NO.	234585

SS-19
54 of 167

Jul 30, 2021 – 9:02am
P:\Roseville_Civil\Santa Cruz County Sanitation District\583-525 – Murray Street Bridge\06 CADD\19-2418-700-CA-VAULTS.dwg

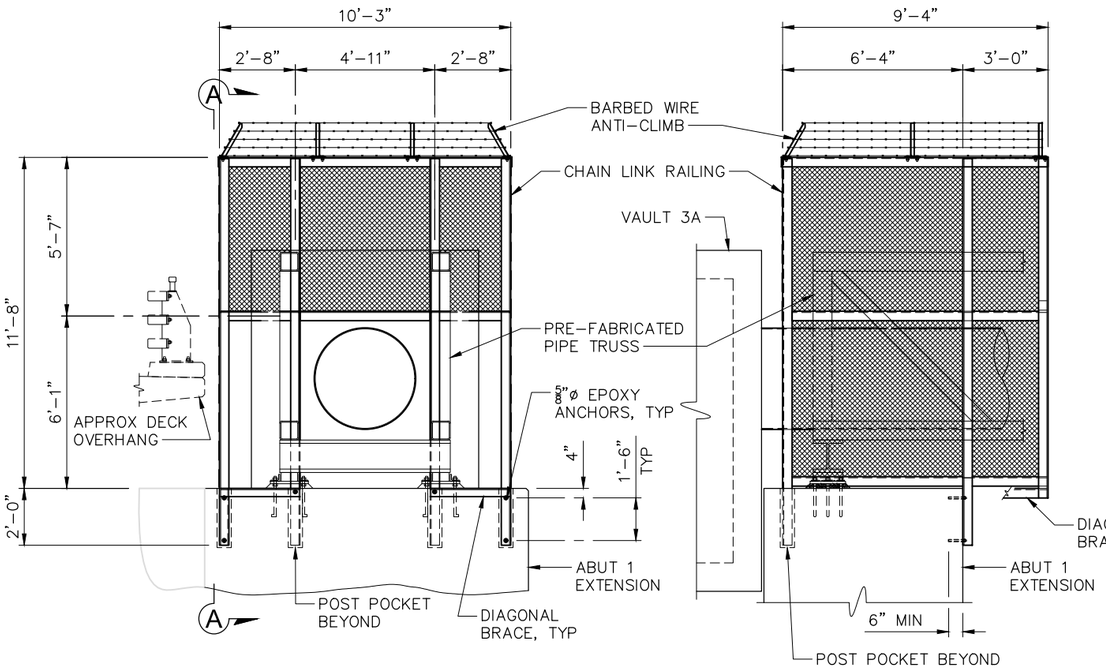

ABUTMENT 1 ELEVATION

ABUTMENT 1 SECTION A–A

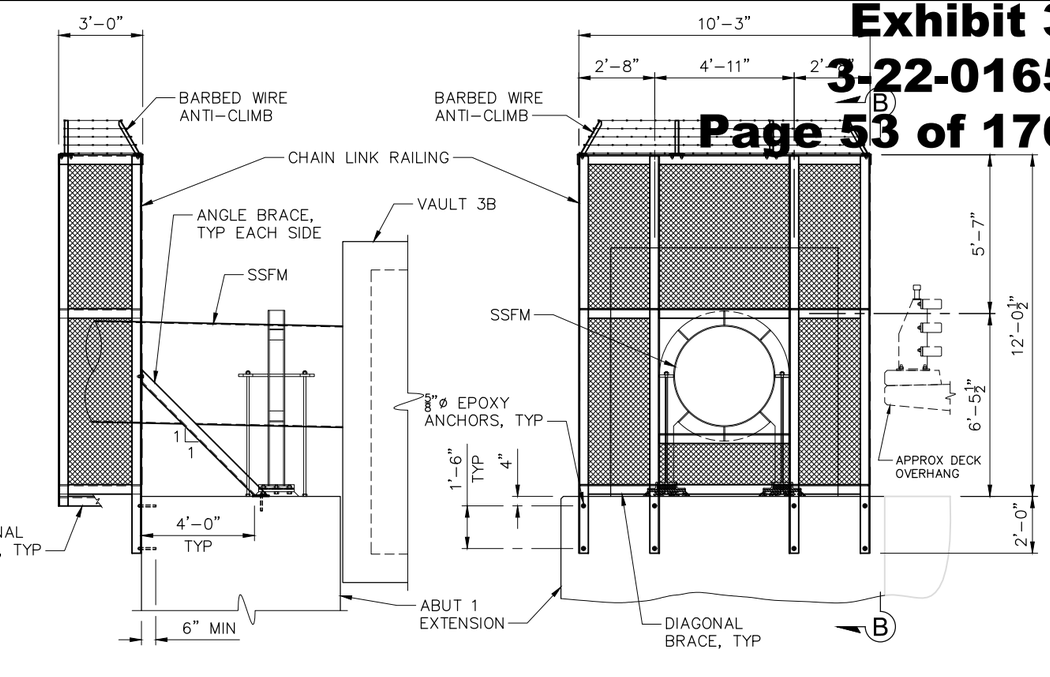

ABUTMENT 10 SECTION B–B

ABUTMENT 10 ELEVATION

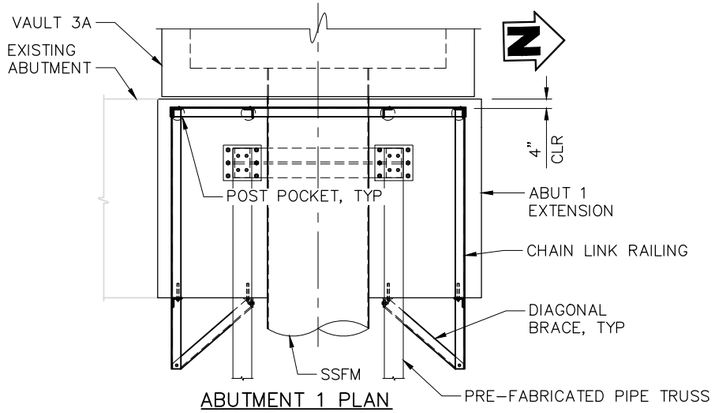

ABUTMENT 1 PLAN

ABUTMENT 1 ANTI-CLIMB DETAIL

SCALE: 1/2" = 1'-0"

NOTES:

1. ALL FRAMING ANGLES TO BE 4x4x3/8 HOT DIPPED GALVANIZED STEEL
2. CHAINLINK MESH TO BE 1" MESH BLACK EPOXY COATED.
3. ALL FASTENERS TO BE HOT DIPPED GALVANIZED 5/8"ø HSB.
4. FOR DETAILS NOT SHOWN HERE, SEE CALTRANS STANDARD PLAN CHAIN LINK RAILING TYPE 7 B11-52.

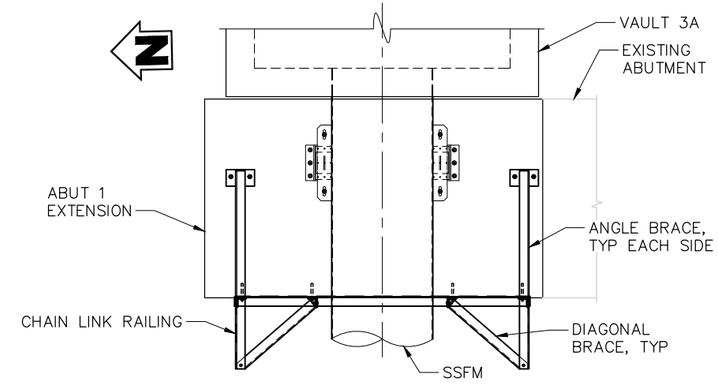

ABUTMENT 10 PLAN

ABUTMENT 10 ANTI-CLIMB DETAIL

SCALE: 1/2" = 1'-0"

100% SUBMITTAL

FOR REDUCED PLANS ORIGINAL SCALE IN INCHES 0 1 2 3

SHEET NAME: PIPELINE ANTI-CLIMB DETAILS

DRAWING NAME: 19-2418-700-CA-VAULTS.DWG

BY	REVISION	DATE

PROFESSIONAL ENGINEER D. TODD KOTEY No. C44811 Exp. 3/31/22 CIVIL STATE OF CALIFORNIA

PROJECT ENGINEER D. TODD KOTEY

SANTA CRUZ COUNTY SANITATION DISTRICT

MURRAY STREET BRIDGE

SANITARY SEWER – PIPELINE ANTI-CLIMB DETAILS

DRAWN:	DCP
CHECKED:	DTK
DATE:	7/30/2021
SCALE:	AS SHOWN
JOB NO.	234585

SS-20

Jul 30, 2021 – 9:02am
P:\Roseville_Client\Santa Cruz County Sanitation District\583-525 – Murray Street Bridge\06 CADD\19-2418-700-CA-VAULTS.dwg

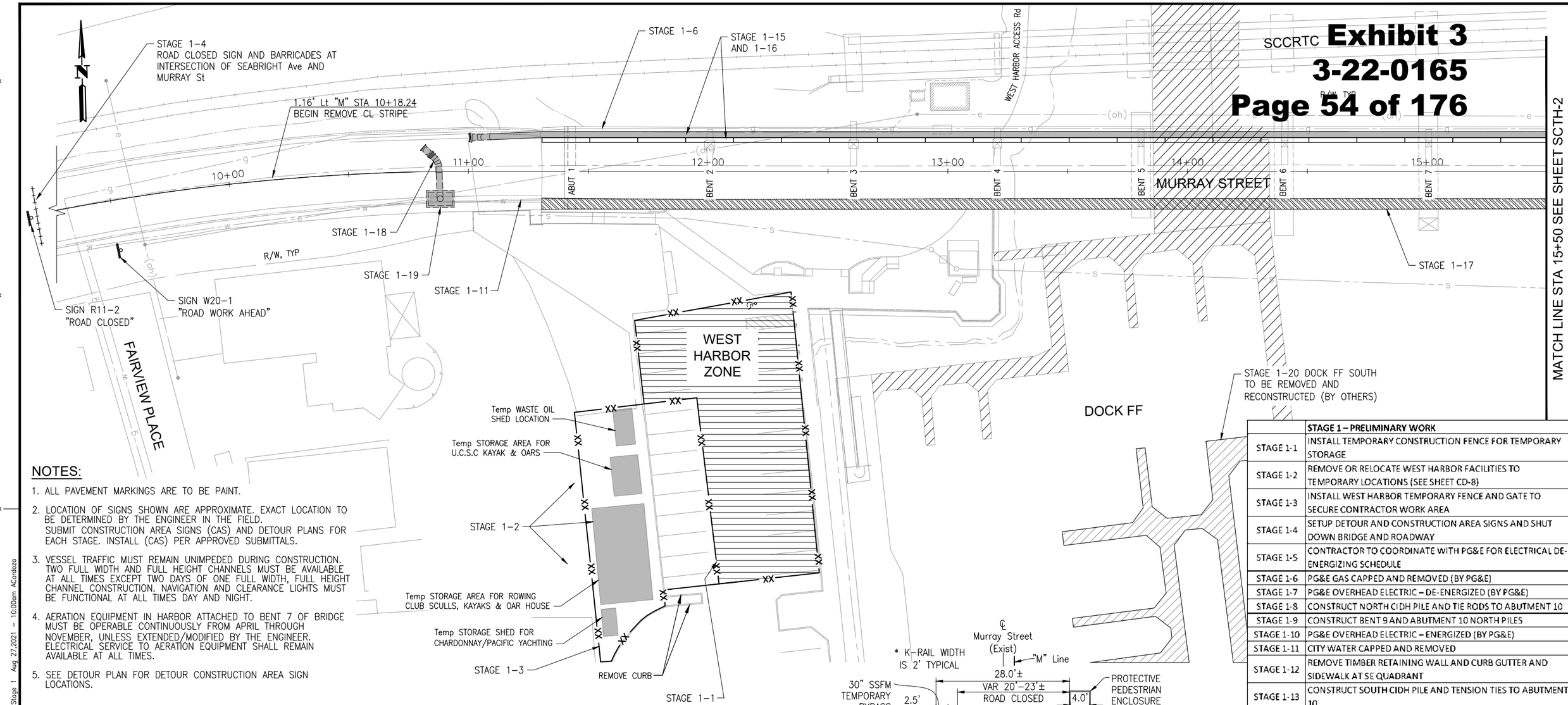

NOTES:

1. ALL PAVEMENT MARKINGS ARE TO BE PAINT.
2. LOCATION OF SIGNS SHOWN ARE APPROXIMATE. EXACT LOCATION TO BE DETERMINED BY THE ENGINEER IN THE FIELD. SUBMIT CONSTRUCTION AREA SIGNS (CAS) AND DETOUR PLANS FOR EACH STAGE. INSTALL (CAS) PER APPROVED SUBMITTALS.
3. VESSEL TRAFFIC MUST REMAIN UNIMPEDED DURING CONSTRUCTION. TWO FULL WIDTH AND FULL HEIGHT CHANNELS MUST BE AVAILABLE AT ALL TIMES EXCEPT TWO DAYS OF ONE FULL WIDTH, FULL HEIGHT CHANNEL CONSTRUCTION. NAVIGATION AND CLEARANCE LIGHTS MUST BE FUNCTIONAL AT ALL TIMES DAY AND NIGHT.
4. AERATION EQUIPMENT IN HARBOR ATTACHED TO BENT 7 OF BRIDGE MUST BE OPERABLE CONTINUOUSLY FROM APRIL THROUGH NOVEMBER, UNLESS EXTENDED/MODIFIED BY THE ENGINEER. ELECTRICAL SERVICE TO AERATION EQUIPMENT SHALL REMAIN AVAILABLE AT ALL TIMES.
5. SEE DETOUR PLAN FOR DETOUR CONSTRUCTION AREA SIGN LOCATIONS.

LEGEND:

- CONTRACTOR STAGING AREA
- TYPE III BARRICADE
- TEMPORARY RAILING (TYPE K)
- TEMPORARY SIGNAL
- PROTECTIVE PEDESTRIAN ENCLOSURE
- TL–2 TEMPORARY END TREATMENT
- TEMPORARY SIGN SINGLE POST
- (RW–3) SIGN NUMBER
- DOCK REMOVAL (BY OTHERS)
- DOCK TO BE CONSTRUCTED/RECONSTRUCTED (BY OTHERS)
- PEDESTRIAN DIRECTION ARROWS
- STRUCTURE REMOVAL
- PLACE TEMP PAVEMENT MARKING (TAPE)
- DIRECTION OF TRAFFIC
- PORTABLE DELINEATORS AT 10' MAX SPACING
- ——XX—— TEMPORARY FENCE
- ——S—— SSFM TEMPORARY BYPASS

CONSTRUCTION AREA SIGNS

SIGN CODE	SIGN MESSAGE	QUANTITY
W20–1	"ROAD WORK AHEAD"	1
R11–2	"ROAD CLOSED"	2
C20–2	"END ROAD WORK"	1

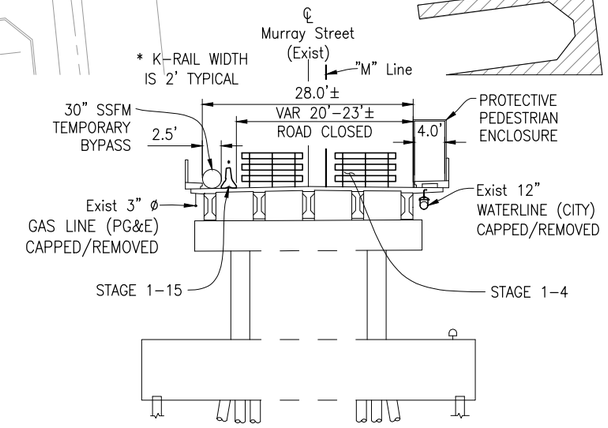

TYPICAL SECTION

	STAGE 1 – PRELIMINARY WORK
STAGE 1-1	INSTALL TEMPORARY CONSTRUCTION FENCE FOR TEMPORARY STORAGE
STAGE 1-2	REMOVE OR RELOCATE WEST HARBOR FACILITIES TO TEMPORARY LOCATIONS (SEE SHEET CD-8)
STAGE 1-3	INSTALL WEST HARBOR TEMPORARY FENCE AND GATE TO SECURE CONTRACTOR WORK AREA
STAGE 1-4	SETUP DETOUR AND CONSTRUCTION AREA SIGNS AND SHUT DOWN BRIDGE AND ROADWAY
STAGE 1-5	CONTRACTOR TO COORDINATE WITH PG&E FOR ELECTRICAL DE-ENERGIZING SCHEDULE
STAGE 1-6	PG&E GAS CAPPED AND REMOVED (BY PG&E)
STAGE 1-7	PG&E OVERHEAD ELECTRIC – DE-ENERGIZED (BY PG&E)
STAGE 1-8	CONSTRUCT NORTH CIDH PILE AND TIE RODS TO ABUTMENT 10
STAGE 1-9	CONSTRUCT BENT 9 AND ABUTMENT 10 NORTH PILES
STAGE 1-10	PG&E OVERHEAD ELECTRIC – ENERGIZED (BY PG&E)
STAGE 1-11	CITY WATER CAPPED AND REMOVED
STAGE 1-12	REMOVE TIMBER RETAINING WALL AND CURB GUTTER AND SIDEWALK AT SE QUADRANT
STAGE 1-13	CONSTRUCT SOUTH CIDH PILE AND TENSION TIES TO ABUTMENT 10
STAGE 1-14	RECONSTRUCT TEMPORARY WALL AND SIDEWALK TO ALLOW PEDESTRIAN PASSAGE
STAGE 1-15	PLACE TEMPORARY RAILING (TYPE K) ALONG NORTH SIDE OF BRIDGE
STAGE 1-16	PLACE TEMPORARY 30" BYPASS PIPE ON NORTH SIDE OF BRIDGE
STAGE 1-17	CONSTRUCT PROTECTIVE PEDESTRIAN ENCLOSURE ALONG SOUTH SIDE OF BRIDGE
STAGE 1-18	CONSTRUCT 30" TEMP SSFM UNDER WEST APPROACH FROM FUTURE LOCATION OF VAULT-1 TO FUTURE LOCATION OF THE WEST MANIFOLD
STAGE 1-19	CONSTRUCT SSFM VAULT-1
STAGE 1-20	DOCK FF SOUTH TO BE REMOVED AND RECONSTRUCTED (BY OTHERS)

100% SUBMITTAL NOT FOR CONSTRUCTION

NOTE:
THE CONTRACTOR SHALL VERIFY ALL CONTROLLING FIELD DIMENSIONS BEFORE ORDERING OR FABRICATING ANY MATERIAL.

SCTH-1

THIS PLAN IS ACCURATE FOR STAGE CONSTRUCTION AND TRAFFIC HANDLING WORK ONLY.

REGISTERED PROFESSIONAL ENGINEER JUSTIN L. CONKLIN No. 81159 Exp. 30-23 CIVIL STATE OF CALIFORNIA

REGISTERED ENGINEER – CIVIL

TRC Engineers or its officers or agents shall not be responsible for the accuracy or completeness of electronic copies of this plan sheet

CITY OF SANTA CRUZ

PREPARED FOR THE CITY OF SANTA CRUZ PUBLIC WORKS DEPARTMENT

	BY	CHECKED
DESIGN	M. CHRISTENSEN	M. IMBRIANI
DETAILS	G. IMBSEN	M. IMBRIANI
QUANTITIES	A. BEDAL	J. CONKLIN

ORIGINAL SCALE IN INCHES FOR REDUCED PLANS 0 1 2 3

TRC
MARK IMBRIANI
PROJECT MANAGER

BRIDGE NO. 36C0108
CONTRACT NO.
EA NO.

MURRAY STREET BRIDGE SEISMIC RETROFIT AND BARRIER REPLACEMEN

STAGE CONSTRUCTION/TRAFFIC HANDLING PLAN STAGE 1

DISREGARD PRINTS BEARING EARLIER REVISION DATES

REVISION DATES (PRELIMINARY STAGE ONLY): 2/18/13 9/18/13 4/17/14 5/19/15 5/22/15 7/31/15 8/28/15 5/24/21 6/22/21

SCALE 1"=20'
SHEET 56 OF 167
VAULT NO. XXXXXXX

Drawing name: H:\1161 – Santa Cruz\Road\Sheets\031 – SC–TH01–XXX.dwg Layout Tab: Stage 1 Aug 27,2021 – 10:00am ACardoza

DRAFT

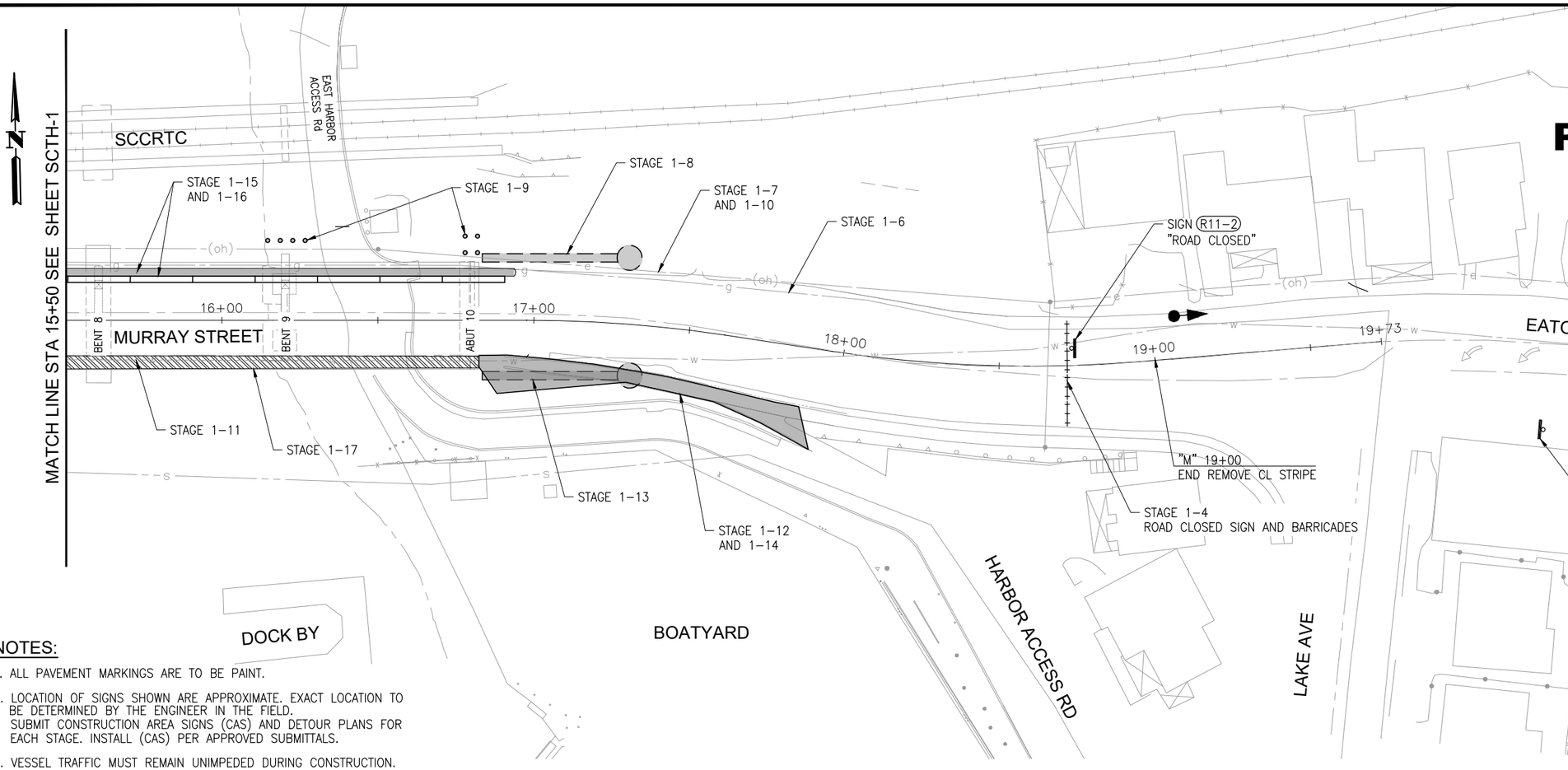

NOTES:

1. ALL PAVEMENT MARKINGS ARE TO BE PAINT.
2. LOCATION OF SIGNS SHOWN ARE APPROXIMATE. EXACT LOCATION TO BE DETERMINED BY THE ENGINEER IN THE FIELD. SUBMIT CONSTRUCTION AREA SIGNS (CAS) AND DETOUR PLANS FOR EACH STAGE. INSTALL (CAS) PER APPROVED SUBMITTALS.
3. VESSEL TRAFFIC MUST REMAIN UNIMPEDED DURING CONSTRUCTION. TWO FULL WIDTH AND FULL HEIGHT CHANNELS MUST BE AVAILABLE AT ALL TIMES EXCEPT TWO DAYS OF ONE FULL WIDTH, FULL HEIGHT CHANNEL CONSTRUCTION. NAVIGATION AND CLEARANCE LIGHTS MUST BE FUNCTIONAL AT ALL TIMES DAY AND NIGHT.
4. AERATION EQUIPMENT IN HARBOR ATTACHED TO BENT 7 OF BRIDGE MUST BE OPERABLE CONTINUOUSLY FROM APRIL THROUGH NOVEMBER, UNLESS EXTENDED/MODIFIED BY THE ENGINEER. ELECTRICAL SERVICE TO AERATION EQUIPMENT SHALL REMAIN AVAILABLE AT ALL TIMES.
5. SEE DETOUR PLAN FOR DETOUR CONSTRUCTION AREA SIGN LOCATIONS.

LEGEND:

- CONTRACTOR STAGING AREA
- TYPE III BARRICADE
- TEMPORARY RAILING (TYPE K)
- TEMPORARY SIGNAL
- PROTECTIVE PEDESTRIAN ENCLOSURE
- MASH TL–2 SLED END TREATMENT
- TEMPORARY SIGN SINGLE POST
- (RW–3) SIGN NUMBER
- DOCK REMOVAL (BY OTHERS)
- DOCK TO BE CONSTRUCTED/RECONSTRUCTED (BY OTHERS)
- PEDESTRIAN DIRECTION ARROWS
- STRUCTURE REMOVAL
- PLACE TEMP PAVEMENT MARKING (TAPE)
- DIRECTION OF TRAFFIC
- PORTABLE DELINEATORS AT 10' MAX SPACING
- ——XX—— TEMPORARY FENCE
- ——S—— SSFM TEMPORARY BYPASS

CONSTRUCTION AREA SIGNS

SIGN CODE	SIGN MESSAGE	QUANTITY
(W20–1)	"ROAD WORK AHEAD"	1
(W16–1P)	"SHARE THE ROAD"	1
(R11–2)	"ROAD CLOSED"	2
(C20–2)	"END ROAD WORK"	1

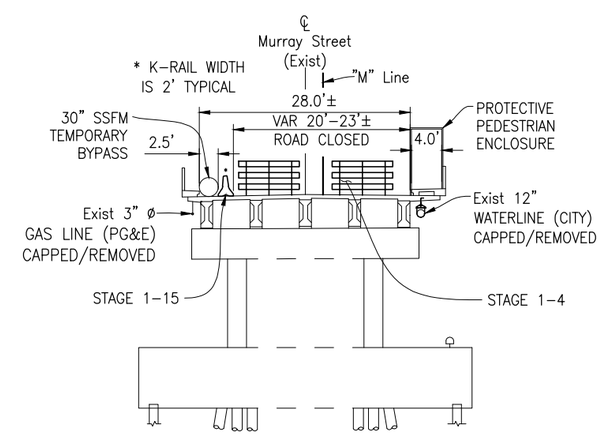

TYPICAL SECTION

	STAGE 1 – PRELIMINARY WORK
STAGE 1-1	INSTALL TEMPORARY CONSTRUCTION FENCE FOR TEMPORARY STORAGE
STAGE 1-2	REMOVE OR RELOCATE WEST HARBOR FACILITIES TO TEMPORARY LOCATIONS (SEE SHEET CD-8)
STAGE 1-3	INSTALL WEST HARBOR TEMPORARY FENCE AND GATE TO SECURE CONTRACTOR WORK AREA
STAGE 1-4	SETUP DETOUR AND CONSTRUCTION AREA SIGNS AND SHUT DOWN BRIDGE AND ROADWAY
STAGE 1-5	CONTRACTOR TO COORDINATE WITH PG&E FOR ELECTRICAL DE-ENERGIZING SCHEDULE
STAGE 1-6	PG&E GAS CAPPED AND REMOVED (BY PG&E)
STAGE 1-7	PG&E OVERHEAD ELECTRIC – DE-ENERGIZED (BY PG&E)
STAGE 1-8	CONSTRUCT NORTH CIDH PILE AND TIE RODS TO ABUTMENT 10
STAGE 1-9	CONSTRUCT BENT 9 AND ABUTMENT 10 NORTH PILES
STAGE 1-10	PG&E OVERHEAD ELECTRIC – ENERGIZED (BY PG&E)
STAGE 1-11	CITY WATER CAPPED AND REMOVED
STAGE 1-12	REMOVE TIMBER RETAINING WALL AND CURB GUTTER AND SIDEWALK AT SE QUADRANT
STAGE 1-13	CONSTRUCT SOUTH CIDH PILE AND TENSION TIES TO ABUTMENT 10
STAGE 1-14	RECONSTRUCT TEMPORARY WALL AND SIDEWALK TO ALLOW PEDESTRIAN PASSAGE
STAGE 1-15	PLACE TEMPORARY RAILING (TYPE K) ALONG NORTH SIDE OF BRIDGE
STAGE 1-16	PLACE TEMPORARY 30" BYPASS PIPE ON NORTH SIDE OF BRIDGE
STAGE 1-17	CONSTRUCT PROTECTIVE PEDESTRIAN ENCLOSURE ALONG SOUTH SIDE OF BRIDGE
STAGE 1-18	CONSTRUCT 30" TEMP SSFM UNDER WEST APPROACH FROM FUTURE LOCATION OF VAULT-1 TO FUTURE LOCATION OF THE WEST MANIFOLD
STAGE 1-19	CONSTRUCT SSFM VAULT-1
STAGE 1-20	DOCK FF SOUTH TO BE REMOVED AND RECONSTRUCTED (BY OTHERS)

100% SUBMITTAL NOT FOR CONSTRUCTION

NOTE:
THE CONTRACTOR SHALL VERIFY ALL CONTROLLING FIELD DIMENSIONS BEFORE ORDERING OR FABRICATING ANY MATERIAL.

THIS PLAN IS ACCURATE FOR STAGE CONSTRUCTION AND TRAFFIC HANDLING WORK ONLY.

SCTH-2

REGISTERED PROFESSIONAL ENGINEER — JUSTIN L. CONKLIN — No. C 50-23 — CIVIL — STATE OF CALIFORNIA
REGISTERED ENGINEER – CIVIL
TRC Engineers or its officers or agents shall not be responsible for the accuracy or completeness of electronic copies of this plan sheet

CITY OF SANTA CRUZ

PREPARED FOR THE
CITY OF SANTA CRUZ
PUBLIC WORKS DEPARTMENT

	BY	CHECKED
DESIGN	M. CHRISTENSEN	M. IMBRIANI
DETAILS	G. IMBSEN	M. IMBRIANI
QUANTITIES	A. BEDAL	J. CONKLIN

ORIGINAL SCALE IN INCHES FOR REDUCED PLANS 0 1 2 3

TRC
MARK IMBRIANI
PROJECT MANAGER

BRIDGE NO. 36C0108
CONTRACT NO.
EA NO.

MURRAY STREET BRIDGE SEISMIC RETROFIT AND BARRIER REPLACEMEN
STAGE CONSTRUCTION/TRAFFIC HANDLING PLAN STAGE 1

DISREGARD PRINTS BEARING EARLIER REVISION DATES
REVISION DATES (PRELIMINARY STAGE ONLY): 2/18/13 9/18/13 4/18/14 5/18/15 5/22/15 7/31/15 9/29/15 5/24/21 6/22/21

SCALE 1"=20'
SHEET 57 OF 167
VAULT NO. XXXXXXX

Drawing name: H:\1161 – Santa Cruz\Road\Sheets\031– SC–TH01–XXX.dwg Layout Tab: Stage 1–2 Aug 27,2021 – 10:01am ACardoza

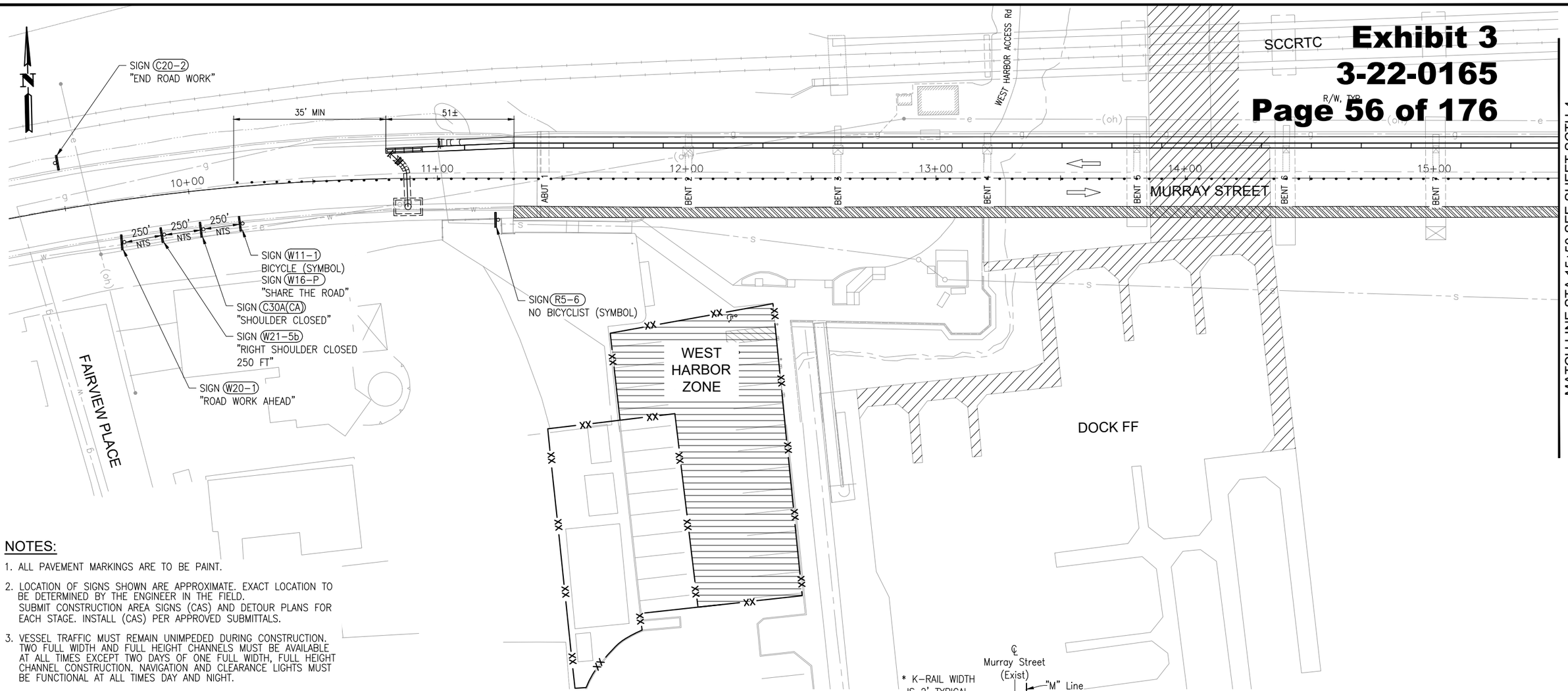

NOTES:

1. ALL PAVEMENT MARKINGS ARE TO BE PAINT.
2. LOCATION OF SIGNS SHOWN ARE APPROXIMATE. EXACT LOCATION TO BE DETERMINED BY THE ENGINEER IN THE FIELD. SUBMIT CONSTRUCTION AREA SIGNS (CAS) AND DETOUR PLANS FOR EACH STAGE. INSTALL (CAS) PER APPROVED SUBMITTALS.
3. VESSEL TRAFFIC MUST REMAIN UNIMPEDED DURING CONSTRUCTION. TWO FULL WIDTH AND FULL HEIGHT CHANNELS MUST BE AVAILABLE AT ALL TIMES EXCEPT TWO DAYS OF ONE FULL WIDTH, FULL HEIGHT CHANNEL CONSTRUCTION. NAVIGATION AND CLEARANCE LIGHTS MUST BE FUNCTIONAL AT ALL TIMES DAY AND NIGHT.
4. AERATION EQUIPMENT IN HARBOR ATTACHED TO BENT 7 OF BRIDGE MUST BE OPERABLE CONTINUOUSLY FROM APRIL THROUGH NOVEMBER, UNLESS EXTENDED/MODIFIED BY THE ENGINEER. ELECTRICAL SERVICE TO AERATION EQUIPMENT SHALL REMAIN AVAILABLE AT ALL TIMES.

LEGEND:

- CONTRACTOR STAGING AREA
- TYPE III BARRICADE
- TEMPORARY RAILING (TYPE K)
- TEMPORARY SIGNAL
- PROTECTIVE PEDESTRIAN ENCLOSURE
- MASH TL-2 SLED END TREATMENT
- TEMPORARY SIGN SINGLE POST
- (RW-3) SIGN NUMBER
- DOCK REMOVAL (BY OTHERS)
- DOCK TO BE CONSTRUCTED/RECONSTRUCTED (BY OTHERS)
- PEDESTRIAN DIRECTION ARROWS
- STRUCTURE REMOVAL
- PLACE TEMP PAVEMENT MARKING (TAPE)
- DIRECTION OF TRAFFIC
- PORTABLE DELINEATORS AT 10' MAX SPACING
- XX TEMPORARY FENCE
- S SSFM TEMPORARY BYPASS

CONSTRUCTION AREA SIGNS

SIGN CODE	SIGN MESSAGE	QUANTITY
(W20-1)	"ROAD WORK AHEAD"	1
(W16-1P)	"SHARE THE ROAD"	1
(R5-6)	NO BICYCLIST (SYMBOL)	1
(C20-2)	"END ROAD WORK"	1

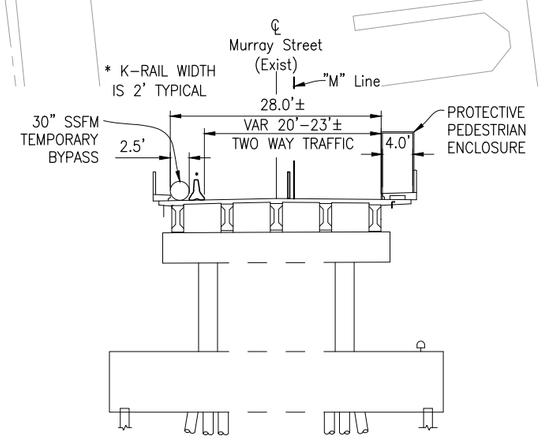

TYPICAL SECTION

	STAGE 2A – SSFM PHASE 1 TEMPORARY BYPASS
STAGE 2A-1	ESTABLISH TWO-WAY TRAFFIC THROUGH CONSTRUCTION
STAGE 2A-2	BORE AND JACK 48" CASING UNDER MURRAY STREET AT EAST END, INSTALL 36" CARRIER PIPE
STAGE 2A-3	TRENCH ALONG NORTH SIDE OF APPROACH AND INSTALL 36" PIPE

THIS PLAN IS ACCURATE FOR STAGE CONSTRUCTION AND TRAFFIC HANDLING WORK ONLY.

100% SUBMITTAL NOT FOR CONSTRUCTION

NOTE:
THE CONTRACTOR SHALL VERIFY ALL CONTROLLING FIELD DIMENSIONS BEFORE ORDERING OR FABRICATING ANY MATERIAL.

SCTH-3

REGISTERED PROFESSIONAL ENGINEER JUSTIN L. CONKLIN No. 50-23 CIVIL STATE OF CALIFORNIA — REGISTERED ENGINEER – CIVIL

TRC Engineers or its officers or agents shall not be responsible for the accuracy or completeness of electronic copies of this plan sheet

CITY OF SANTA CRUZ

PREPARED FOR THE CITY OF SANTA CRUZ PUBLIC WORKS DEPARTMENT

	BY	CHECKED
DESIGN	M. CHRISTENSEN	M. IMBRIANI
DETAILS	G. IMBSEN	M. IMBRIANI
QUANTITIES	A. BEDAL	J. CONKLIN

ORIGINAL SCALE IN INCHES FOR REDUCED PLANS 0 1 2 3

TRC
MARK IMBRIANI
PROJECT MANAGER

BRIDGE NO. 36C0108
CONTRACT NO.
EA NO.

MURRAY STREET BRIDGE
SEISMIC RETROFIT AND BARRIER REPLACEMEN
STAGE CONSTRUCTION/TRAFFIC HANDLING PLAN STAGE 2A

DISREGARD PRINTS BEARING EARLIER REVISION DATES → REVISION DATES (PRELIMINARY STAGE ONLY) 2/18/13 9/18/13 4/19/14 5/19/15 5/22/15 7/24/15 9/29/15 5/24/21 6/22/21

SCALE 1"=20'
SHEET 58 OF 167
VAULT NO. XXXXXXX

Drawing name: H:\1161 – Santa Cruz\Road\Sheets\031– SC-TH01-XXX.dwg Layout Tab: Stage 2A-1 Aug 27,2021 – 9:23am ACardoza

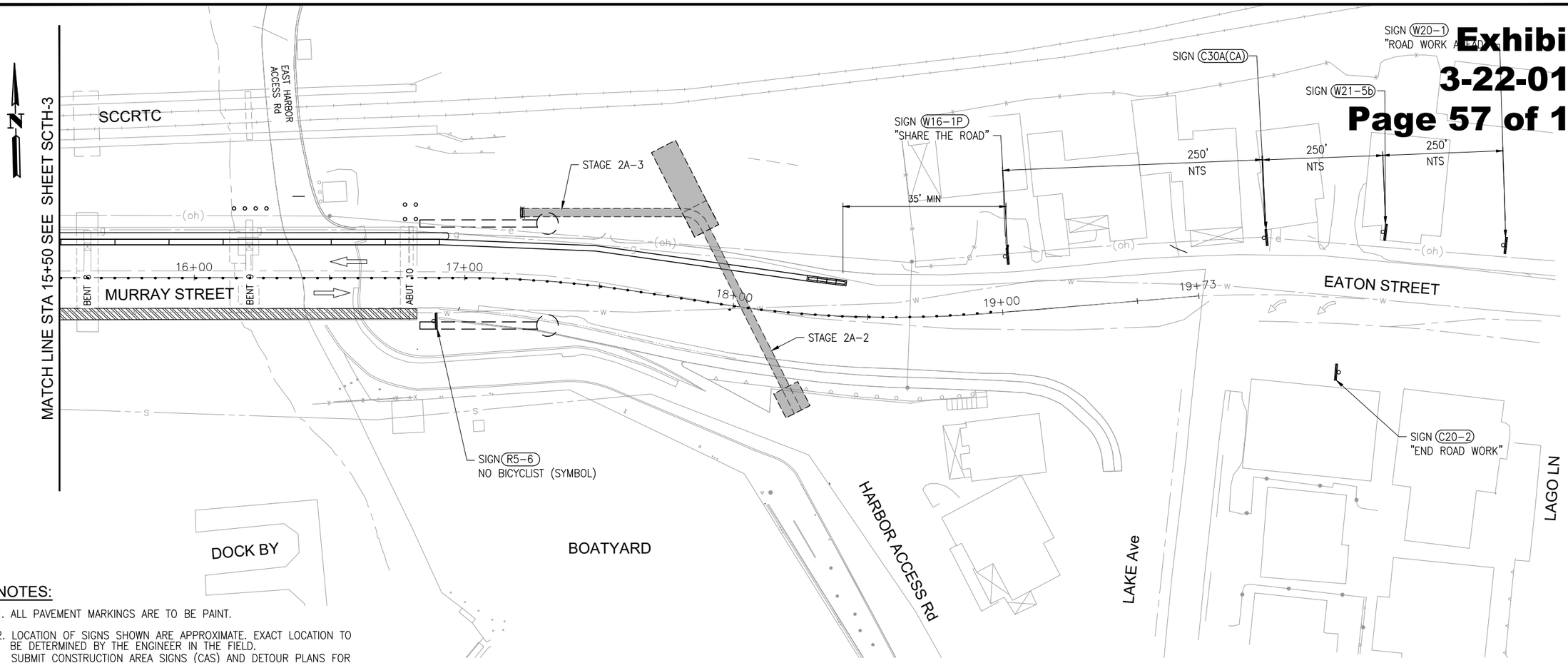

NOTES:

1. ALL PAVEMENT MARKINGS ARE TO BE PAINT.
2. LOCATION OF SIGNS SHOWN ARE APPROXIMATE. EXACT LOCATION TO BE DETERMINED BY THE ENGINEER IN THE FIELD. SUBMIT CONSTRUCTION AREA SIGNS (CAS) AND DETOUR PLANS FOR EACH STAGE. INSTALL (CAS) PER APPROVED SUBMITTALS.
3. VESSEL TRAFFIC MUST REMAIN UNIMPEDED DURING CONSTRUCTION. TWO FULL WIDTH AND FULL HEIGHT CHANNELS MUST BE AVAILABLE AT ALL TIMES EXCEPT TWO DAYS OF ONE FULL WIDTH, FULL HEIGHT CHANNEL CONSTRUCTION. NAVIGATION AND CLEARANCE LIGHTS MUST BE FUNCTIONAL AT ALL TIMES DAY AND NIGHT.
4. AERATION EQUIPMENT IN HARBOR ATTACHED TO BENT 7 OF BRIDGE MUST BE OPERABLE CONTINUOUSLY FROM APRIL THROUGH NOVEMBER, UNLESS EXTENDED/MODIFIED BY THE ENGINEER. ELECTRICAL SERVICE TO AERATION EQUIPMENT SHALL REMAIN AVAILABLE AT ALL TIMES.

LEGEND:

- CONTRACTOR STAGING AREA
- TYPE III BARRICADE
- TEMPORARY RAILING (TYPE K)
- TEMPORARY SIGNAL
- PROTECTIVE PEDESTRIAN ENCLOSURE
- MASH TL-2 SLED END TREATMENT
- TEMPORARY SIGN SINGLE POST
- (RW-3) SIGN NUMBER
- DOCK REMOVAL (BY OTHERS)
- DOCK TO BE CONSTRUCTED/RECONSTRUCTED (BY OTHERS)
- PEDESTRIAN DIRECTION ARROWS
- STRUCTURE REMOVAL
- PLACE TEMP PAVEMENT MARKING (TAPE)
- DIRECTION OF TRAFFIC
- PORTABLE DELINEATORS AT 10' MAX SPACING
- ——XX—— TEMPORARY FENCE
- ——--S——--—— SSFM TEMPORARY BYPASS

CONSTRUCTION AREA SIGNS

SIGN CODE	SIGN MESSAGE	QUANTITY
(W20-1)	"ROAD WORK AHEAD"	1
(W16-1P)	"SHARE THE ROAD"	1
(R5-6)	NO BICYCLIST (SYMBOL)	1
(C20-2)	"END ROAD WORK"	1

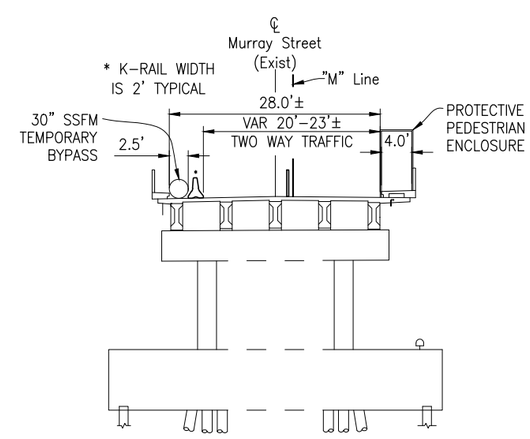

TYPICAL SECTION

	STAGE 2A – SSFM PHASE 1 TEMPORARY BYPASS
STAGE 2A-1	ESTABLISH TWO-WAY TRAFFIC THROUGH CONSTRUCTION
STAGE 2A-2	BORE AND JACK 48" CASING UNDER MURRAY STREET AT EAST END, INSTALL 36" CARRIER PIPE
STAGE 2A-3	TRENCH ALONG NORTH SIDE OF APPROACH AND INSTALL 36" PIPE

100% SUBMITTAL NOT FOR CONSTRUCTION

NOTE:
THE CONTRACTOR SHALL VERIFY ALL CONTROLLING FIELD DIMENSIONS BEFORE ORDERING OR FABRICATING ANY MATERIAL.

THIS PLAN IS ACCURATE FOR STAGE CONSTRUCTION AND TRAFFIC HANDLING WORK ONLY.

SCTH-4

REGISTERED PROFESSIONAL ENGINEER — JUSTIN L. CONKLIN — CIVIL — STATE OF CALIFORNIA

REGISTERED ENGINEER – CIVIL

TRC Engineers or its officers or agents shall not be responsible for the accuracy or completeness of electronic copies of this plan sheet

CITY OF SANTA CRUZ

PREPARED FOR THE CITY OF SANTA CRUZ PUBLIC WORKS DEPARTMENT

	BY	CHECKED
DESIGN	M. CHRISTENSEN	M. IMBRIANI
DETAILS	G. IMBSEN	M. IMBRIANI
QUANTITIES	A. BEDAL	J. CONKLIN

ORIGINAL SCALE IN INCHES FOR REDUCED PLANS 0 1 2 3

TRC
MARK IMBRIANI
PROJECT MANAGER

BRIDGE NO. 36C0108
CONTRACT NO.
EA NO.

MURRAY STREET BRIDGE SEISMIC RETROFIT AND BARRIER REPLACEMEN

STAGE CONSTRUCTION/TRAFFIC HANDLING PLAN STAGE 2A

DISREGARD PRINTS BEARING EARLIER REVISION DATES

REVISION DATES (PRELIMINARY STAGE ONLY): 2/19/13 9/18/13 4/12/14 5/19/15 5/22/15 7/31/15 9/29/15 5/24/21 6/22/21

SCALE 1"=20'
SHEET 59 OF 167
VAULT NO. XXXXXXX

Drawing name: H:\1161 – Santa Cruz\Road\Sheets\031– SC-TH01-XXX.dwg Layout Tab: Stage 2A-2 Aug 27,2021 – 9:24am ACardoza

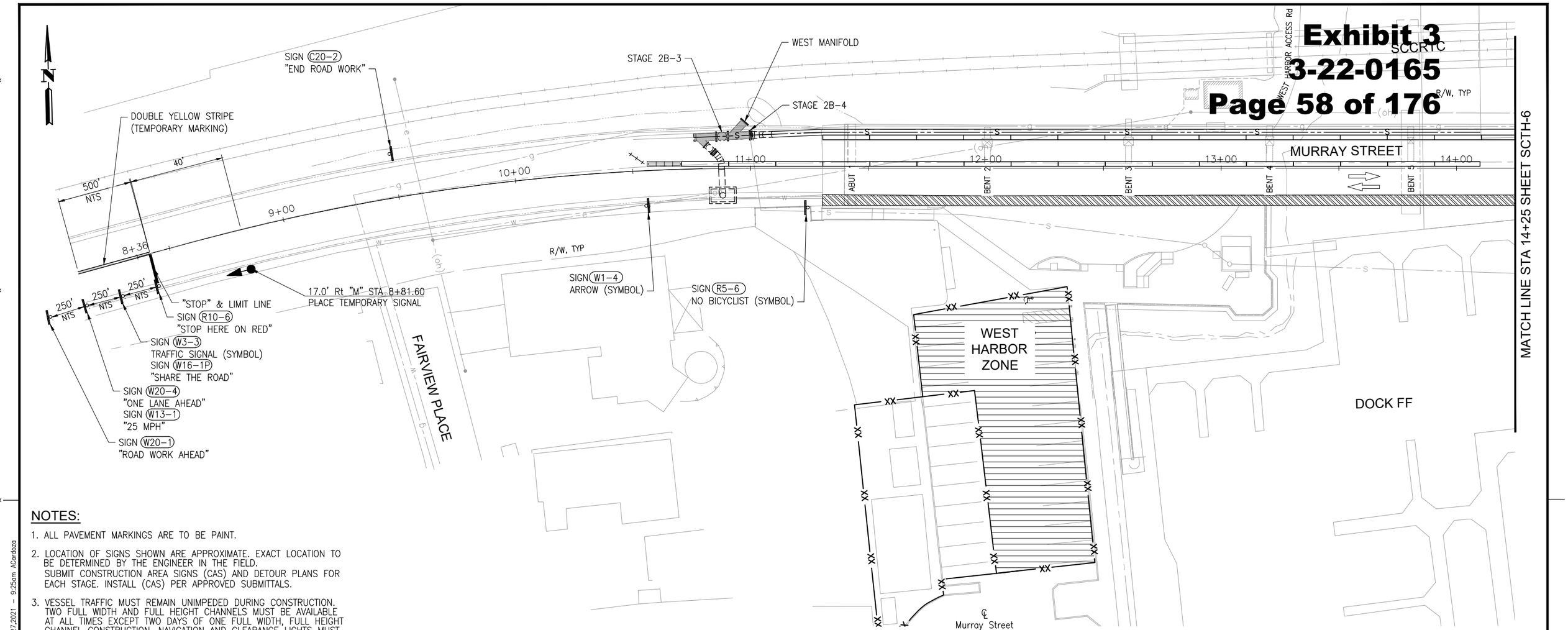

NOTES:

1. ALL PAVEMENT MARKINGS ARE TO BE PAINT.
2. LOCATION OF SIGNS SHOWN ARE APPROXIMATE. EXACT LOCATION TO BE DETERMINED BY THE ENGINEER IN THE FIELD. SUBMIT CONSTRUCTION AREA SIGNS (CAS) AND DETOUR PLANS FOR EACH STAGE. INSTALL (CAS) PER APPROVED SUBMITTALS.
3. VESSEL TRAFFIC MUST REMAIN UNIMPEDED DURING CONSTRUCTION. TWO FULL WIDTH AND FULL HEIGHT CHANNELS MUST BE AVAILABLE AT ALL TIMES EXCEPT TWO DAYS OF ONE FULL WIDTH, FULL HEIGHT CHANNEL CONSTRUCTION. NAVIGATION AND CLEARANCE LIGHTS MUST BE FUNCTIONAL AT ALL TIMES DAY AND NIGHT.
4. AERATION EQUIPMENT IN HARBOR ATTACHED TO BENT 7 OF BRIDGE MUST BE OPERABLE CONTINUOUSLY FROM APRIL THROUGH NOVEMBER, UNLESS EXTENDED/MODIFIED BY THE ENGINEER. ELECTRICAL SERVICE TO AERATION EQUIPMENT SHALL REMAIN AVAILABLE AT ALL TIMES.

LEGEND:

- CONTRACTOR STAGING AREA
- TYPE III BARRICADE
- TEMPORARY RAILING (TYPE K)
- TEMPORARY SIGNAL
- PROTECTIVE PEDESTRIAN ENCLOSURE
- MASH TL-2 SLED END TREATMENT
- TEMPORARY SIGN SINGLE POST
- RW-3 SIGN NUMBER
- DOCK REMOVAL (BY OTHERS)
- DOCK TO BE CONSTRUCTED/RECONSTRUCTED (BY OTHERS)
- PEDESTRIAN DIRECTION ARROWS
- STRUCTURE REMOVAL
- PLACE TEMP PAVEMENT MARKING (TAPE)
- DIRECTION OF TRAFFIC
- PORTABLE DELINEATORS AT 10' MAX SPACING
- XX TEMPORARY FENCE
- S SSFM TEMPORARY BYPASS

CONSTRUCTION AREA SIGNS

SIGN CODE	SIGN MESSAGE	QUANTITY
W20-1	"ROAD WORK AHEAD"	1
W16-1P	"SHARE THE ROAD"	1
R5-6	NO BICYCLIST (SYMBOL)	1
C20-2	"END ROAD WORK"	1

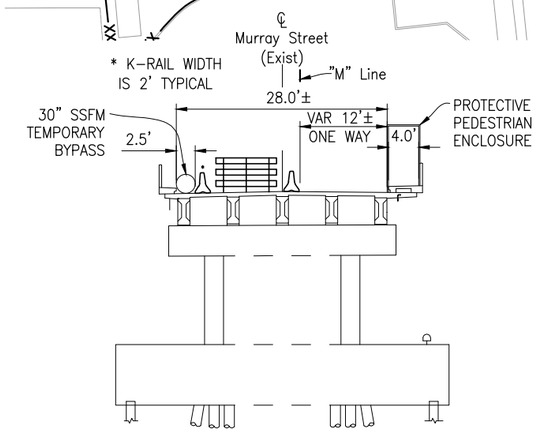

TYPICAL SECTION

	STAGE 2B – SSFM PHASE 1 TEMPORARY BYPASS-Cont.
STAGE 2B-1	ESTABLISH ONE-WAY TRAFFIC THROUGH CONSTRUCTION
STAGE 2B-2	CONSTRUCT SSFM VAULT-4 AND VAULT-5
STAGE 2B-3	INSTALL EAST, WEST, AND SOUTH MANIFOLDS
STAGE 2B-4	CONNECT TEMPORARY SSFM LINES AND VALVES
STAGE 2B-5	OPEN PHASE 1 30" TEMPORARY BYPASS LINE

THIS PLAN IS ACCURATE FOR STAGE CONSTRUCTION AND TRAFFIC HANDLING WORK ONLY.

100% SUBMITTAL NOT FOR CONSTRUCTION

NOTE:
THE CONTRACTOR SHALL VERIFY ALL CONTROLLING FIELD DIMENSIONS BEFORE ORDERING OR FABRICATING ANY MATERIAL.

SCTH-5

REGISTERED PROFESSIONAL ENGINEER JUSTIN L. CONKLIN No. 50-23 CIVIL STATE OF CALIFORNIA — REGISTERED ENGINEER – CIVIL

TRC Engineers or its officers or agents shall not be responsible for the accuracy or completeness of electronic copies of this plan sheet

CITY OF SANTA CRUZ

PREPARED FOR THE
CITY OF SANTA CRUZ
PUBLIC WORKS DEPARTMENT

	BY	CHECKED
DESIGN	M. CHRISTENSEN	M. IMBRIANI
DETAILS	G. IMBSEN	M. IMBRIANI
QUANTITIES	A. BEDAL	J. CONKLIN

ORIGINAL SCALE IN INCHES FOR REDUCED PLANS 0 1 2 3

TRC
MARK IMBRIANI
PROJECT MANAGER

BRIDGE NO. 36C0108
CONTRACT NO.
EA NO.

MURRAY STREET BRIDGE SEISMIC RETROFIT AND BARRIER REPLACEMEN

STAGE CONSTRUCTION/TRAFFIC HANDLING PLAN STAGE 2B

DISREGARD PRINTS BEARING EARLIER REVISION DATES

REVISION DATES (PRELIMINARY STAGE ONLY): 2/18/13 9/18/13 4/19/14 5/19/15 5/22/15 7/24/15 9/29/15 5/24/21 6/22/21

SCALE 1"=20'
SHEET 60 OF 167
VAULT NO. XXXXXXX

Drawing name: H:\1161 – Santa Cruz\Road\Sheets\031– SC-TH01-XXX.dwg Layout Tab: Stage 2B-1 Aug 27,2021 – 9:25am ACardoza

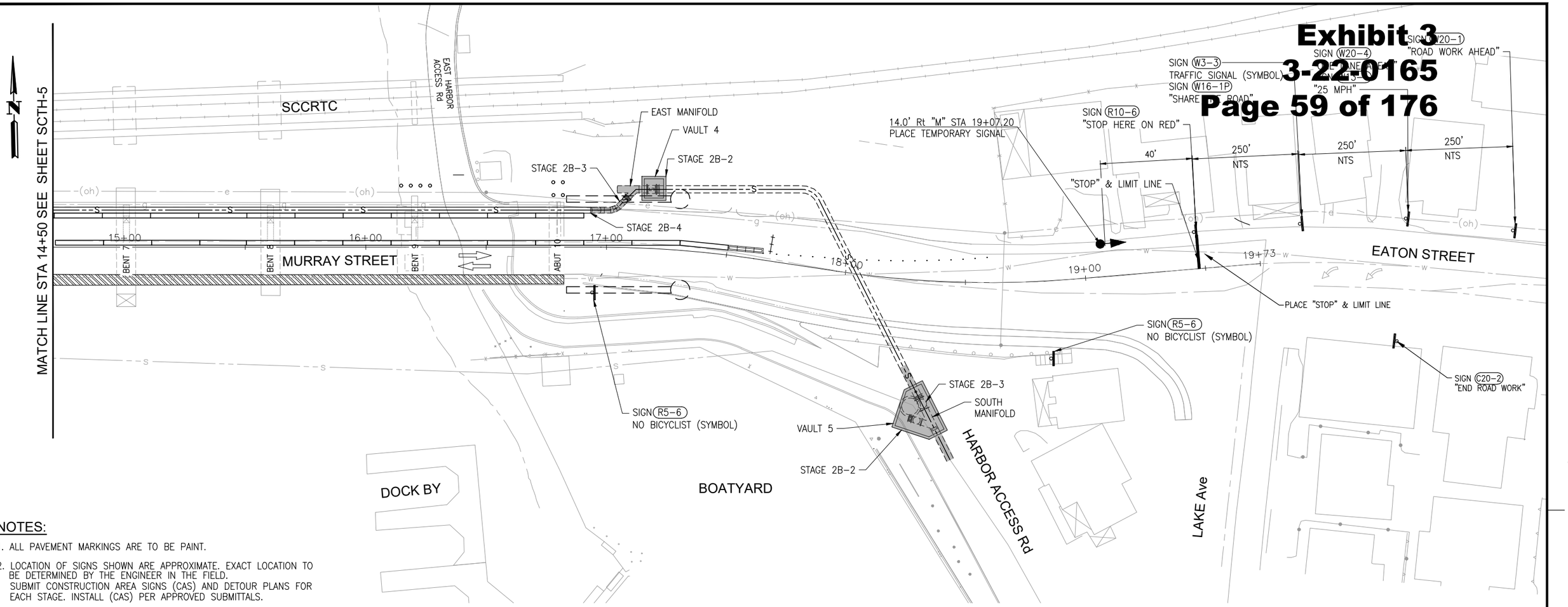

NOTES:

1. ALL PAVEMENT MARKINGS ARE TO BE PAINT.
2. LOCATION OF SIGNS SHOWN ARE APPROXIMATE. EXACT LOCATION TO BE DETERMINED BY THE ENGINEER IN THE FIELD. SUBMIT CONSTRUCTION AREA SIGNS (CAS) AND DETOUR PLANS FOR EACH STAGE. INSTALL (CAS) PER APPROVED SUBMITTALS.
3. VESSEL TRAFFIC MUST REMAIN UNIMPEDED DURING CONSTRUCTION. TWO FULL WIDTH AND FULL HEIGHT CHANNELS MUST BE AVAILABLE AT ALL TIMES EXCEPT TWO DAYS OF ONE FULL WIDTH, FULL HEIGHT CHANNEL CONSTRUCTION. NAVIGATION AND CLEARANCE LIGHTS MUST BE FUNCTIONAL AT ALL TIMES DAY AND NIGHT.
4. AERATION EQUIPMENT IN HARBOR ATTACHED TO BENT 7 OF BRIDGE MUST BE OPERABLE CONTINUOUSLY FROM APRIL THROUGH NOVEMBER, UNLESS EXTENDED/MODIFIED BY THE ENGINEER. ELECTRICAL SERVICE TO AERATION EQUIPMENT SHALL REMAIN AVAILABLE AT ALL TIMES.

LEGEND:

- CONTRACTOR STAGING AREA
- TYPE III BARRICADE
- TEMPORARY RAILING (TYPE K)
- TEMPORARY SIGNAL
- PROTECTIVE PEDESTRIAN ENCLOSURE
- MASH TL-2 SLED END TREATMENT
- TEMPORARY SIGN SINGLE POST
- (RW-3) SIGN NUMBER
- DOCK REMOVAL (BY OTHERS)
- DOCK TO BE CONSTRUCTED/RECONSTRUCTED (BY OTHERS)
- PEDESTRIAN DIRECTION ARROWS
- STRUCTURE REMOVAL
- PLACE TEMP PAVEMENT MARKING (TAPE)
- DIRECTION OF TRAFFIC
- PORTABLE DELINEATORS AT 10' MAX SPACING
- ——XX—— TEMPORARY FENCE
- ——--S——--S—— SSFM TEMPORARY BYPASS

CONSTRUCTION AREA SIGNS

SIGN CODE	SIGN MESSAGE	QUANTITY
(W20-1)	"ROAD WORK AHEAD"	1
(W16-1P)	"SHARE THE ROAD"	1
(R5-6)	NO BICYCLIST (SYMBOL)	1
(C20-2)	"END ROAD WORK"	1

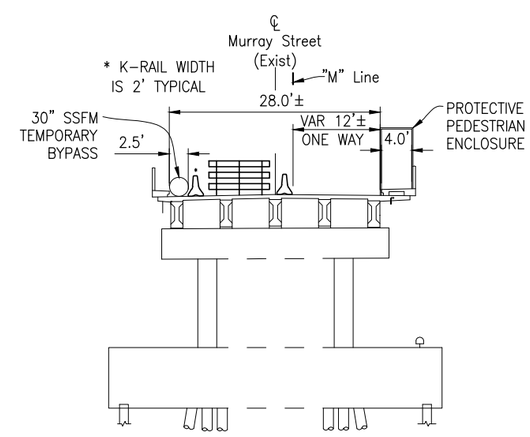

TYPICAL SECTION

	STAGE 2B – SSFM PHASE 1 TEMPORARY BYPASS-Cont.
STAGE 2B-1	ESTABLISH ONE-WAY TRAFFIC THROUGH CONSTRUCTION
STAGE 2B-2	CONSTRUCT SSFM VAULT-4 AND VAULT-5
STAGE 2B-3	INSTALL EAST, WEST, AND SOUTH MANIFOLDS
STAGE 2B-4	CONNECT TEMPORARY SSFM LINES AND VALVES
STAGE 2B-5	OPEN PHASE 1 30" TEMPORARY BYPASS LINE

THIS PLAN IS ACCURATE FOR STAGE CONSTRUCTION AND TRAFFIC HANDLING WORK ONLY.

100% SUBMITTAL NOT FOR CONSTRUCTION

NOTE:
THE CONTRACTOR SHALL VERIFY ALL CONTROLLING FIELD DIMENSIONS BEFORE ORDERING OR FABRICATING ANY MATERIAL.

SCTH-6

REGISTERED PROFESSIONAL ENGINEER — JUSTIN L. CONKLIN — No. C 50023 — CIVIL — STATE OF CALIFORNIA — EXPIRES 12-31-23

REGISTERED ENGINEER – CIVIL

TRC Engineers or its officers or agents shall not be responsible for the accuracy or completeness of electronic copies of this plan sheet

CITY OF SANTA CRUZ

PREPARED FOR THE CITY OF SANTA CRUZ PUBLIC WORKS DEPARTMENT

	BY	CHECKED
DESIGN	M. CHRISTENSEN	M. IMBRIANI
DETAILS	G. IMBSEN	M. IMBRIANI
QUANTITIES	A. BEDAL	J. CONKLIN

ORIGINAL SCALE IN INCHES FOR REDUCED PLANS 0 1 2 3

TRC
MARK IMBRIANI
PROJECT MANAGER

BRIDGE NO. 36C0108
CONTRACT NO.
EA NO.

MURRAY STREET BRIDGE SEISMIC RETROFIT AND BARRIER REPLACEMEN

STAGE CONSTRUCTION/TRAFFIC HANDLING PLAN STAGE 2B

DISREGARD PRINTS BEARING EARLIER REVISION DATES

REVISION DATES (PRELIMINARY STAGE ONLY): 2/19/13 9/19/13 4/12/14 5/19/15 5/22/15 7/31/15 8/28/15 5/24/21 6/22/21

SCALE 1"=20'
SHEET 61 OF 167
VAULT NO. XXXXXXX

Drawing name: H:\1161 – Santa Cruz\Road\Sheets\031– SC-TH01-XXX.dwg Layout Tab: Stage 2B-2 Aug 27,2021 – 9:26am ACardoza

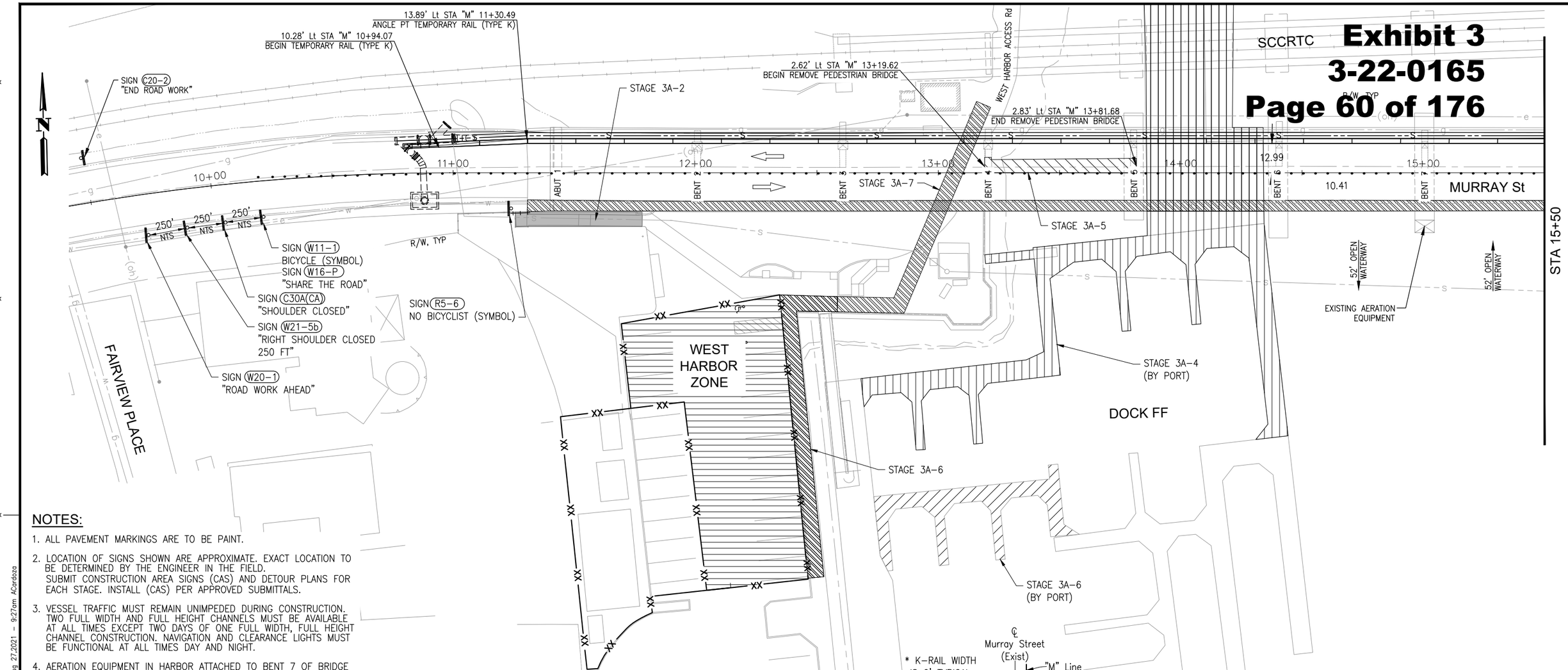

NOTES:

1. ALL PAVEMENT MARKINGS ARE TO BE PAINT.
2. LOCATION OF SIGNS SHOWN ARE APPROXIMATE. EXACT LOCATION TO BE DETERMINED BY THE ENGINEER IN THE FIELD. SUBMIT CONSTRUCTION AREA SIGNS (CAS) AND DETOUR PLANS FOR EACH STAGE. INSTALL (CAS) PER APPROVED SUBMITTALS.
3. VESSEL TRAFFIC MUST REMAIN UNIMPEDED DURING CONSTRUCTION. TWO FULL WIDTH AND FULL HEIGHT CHANNELS MUST BE AVAILABLE AT ALL TIMES EXCEPT TWO DAYS OF ONE FULL WIDTH, FULL HEIGHT CHANNEL CONSTRUCTION. NAVIGATION AND CLEARANCE LIGHTS MUST BE FUNCTIONAL AT ALL TIMES DAY AND NIGHT.
4. AERATION EQUIPMENT IN HARBOR ATTACHED TO BENT 7 OF BRIDGE MUST BE OPERABLE CONTINUOUSLY FROM APRIL THROUGH NOVEMBER, UNLESS EXTENDED/MODIFIED BY THE ENGINEER. ELECTRICAL SERVICE TO AERATION EQUIPMENT SHALL REMAIN AVAILABLE AT ALL TIMES.
5. TEMPORARY TRAFFIC SIGNAL NOT IN USE DURING THIS STAGE.

LEGEND:

- CONTRACTOR STAGING AREA
- TYPE III BARRICADE
- TEMPORARY RAILING (TYPE K)
- TEMPORARY SIGNAL
- PROTECTIVE PEDESTRIAN ENCLOSURE
- MASH TL-2 SLED END TREATMENT
- TEMPORARY SIGN SINGLE POST
- (RW-3) SIGN NUMBER
- DOCK REMOVAL (BY OTHERS)
- DOCK TO BE CONSTRUCTED/RECONSTRUCTED (BY OTHERS)
- PEDESTRIAN DIRECTION ARROWS
- STRUCTURE REMOVAL
- PLACE TEMP PAVEMENT MARKING (TAPE)
- DIRECTION OF TRAFFIC
- PORTABLE DELINEATORS AT 10' MAX SPACING
- —XX— TEMPORARY FENCE
- —S— SSFM TEMPORARY BYPASS

CONSTRUCTION AREA SIGNS

SIGN CODE	SIGN MESSAGE	QUANTITY
(W20-1)	"ROAD WORK AHEAD"	1
(W16-1P)	"SHARE THE ROAD"	1
(R5-6)	NO BICYCLIST (SYMBOL)	1
(C20-2)	"END ROAD WORK"	1
(R9-3a)	NO PEDESTRIAN (SYMBOL)	2
(R11-2)	"ROAD CLOSED"	2

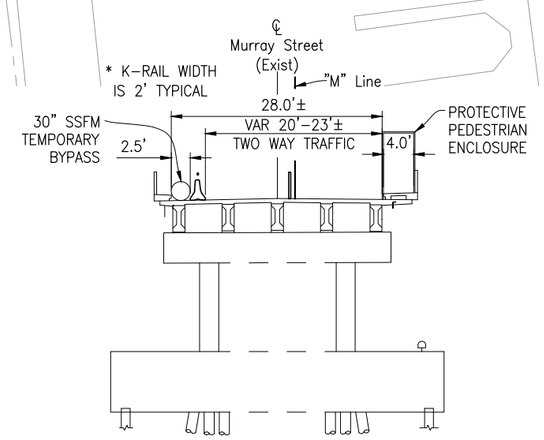

TYPICAL SECTION

	STAGE 3A – WEST HARBOR PREPARATION
STAGE 3A-1	ESTABLISH TWO-WAY TRAFFIC THROUGH CONSTRUCTION
STAGE 3A-2	CLOSE WEST STAIRS AND WEST HARBOR ACCESS ROAD BENEATH BRIDGE
STAGE 3A-3	CONSTRUCT TEMPORARY DOCK FF (BY PORT)
STAGE 3A-4	REMOVE PORTION OF DOCK FF (BY PORT)
STAGE 3A-5	REMOVE PEDESTRIAN BRIDGE BETWEEN BENTS 4 AND 5
STAGE 3A-6	CONSTRUCT PROTECTIVE PEDESTRIAN ENCLOSURE FROM WEST PARKING LOT TO DOCK FF GANGWAY
STAGE 3A-7	CONSTRUCT PROTECTIVE PEDESTRIAN ENCLOSURE UNDER BRIDGE AT WEST ACCESS ROAD

THIS PLAN IS ACCURATE FOR STAGE CONSTRUCTION AND TRAFFIC HANDLING WORK ONLY.

100% SUBMITTAL NOT FOR CONSTRUCTION

NOTE:
THE CONTRACTOR SHALL VERIFY ALL CONTROLLING FIELD DIMENSIONS BEFORE ORDERING OR FABRICATING ANY MATERIAL.

SCTH-7

REGISTERED PROFESSIONAL ENGINEER JUSTIN L. CONKLIN No. 76530-23 CIVIL STATE OF CALIFORNIA
REGISTERED ENGINEER – CIVIL
TRC Engineers or its officers or agents shall not be responsible for the accuracy or completeness of electronic copies of this plan sheet

CITY OF SANTA CRUZ
PREPARED FOR THE CITY OF SANTA CRUZ PUBLIC WORKS DEPARTMENT

	BY	CHECKED
DESIGN	M. CHRISTENSEN	M. IMBRIANI
DETAILS	G. IMBSEN	M. IMBRIANI
QUANTITIES	A. BEDAL	J. CONKLIN

ORIGINAL SCALE IN INCHES FOR REDUCED PLANS 0 1 2 3

TRC
MARK IMBRIANI
PROJECT MANAGER

BRIDGE NO. 36C0108
CONTRACT NO.
EA NO.

MURRAY STREET BRIDGE
SEISMIC RETROFIT AND BARRIER REPLACEMEN
STAGE CONSTRUCTION/TRAFFIC HANDLING PLAN STAGE 3A

DISREGARD PRINTS BEARING EARLIER REVISION DATES
REVISION DATES (PRELIMINARY STAGE ONLY): 2/13/13 8/16/13 4/17/14 5/12/15 5/22/15 7/24/15 8/29/15 5/24/21 6/22/21

SCALE 1"=20'
SHEET 62 OF 167
VAULT NO. XXXXXXX

Drawing name: H:\1161 – Santa Cruz\Road\Sheets\031– SC–TH01–XXX.dwg Layout Tab: Stage 3A Aug 27,2021 – 9:27am ACardoza

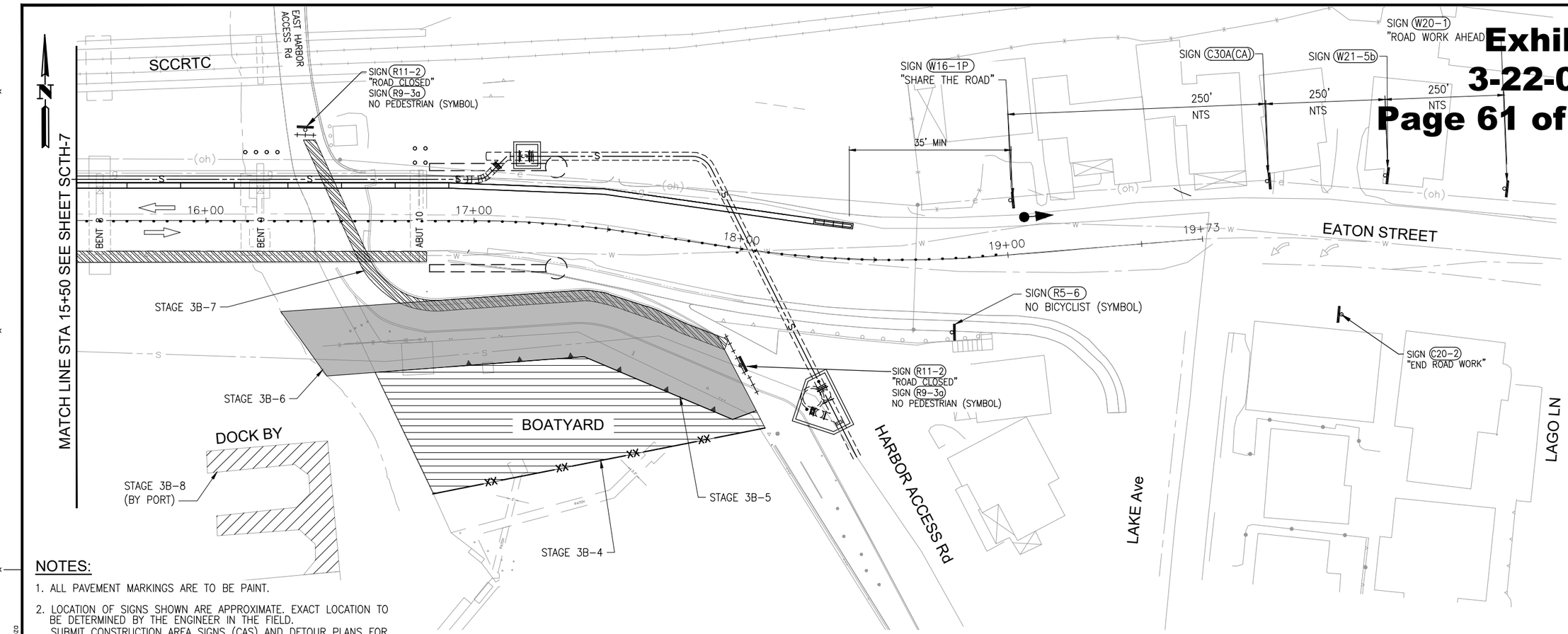

NOTES:

1. ALL PAVEMENT MARKINGS ARE TO BE PAINT.
2. LOCATION OF SIGNS SHOWN ARE APPROXIMATE. EXACT LOCATION TO BE DETERMINED BY THE ENGINEER IN THE FIELD. SUBMIT CONSTRUCTION AREA SIGNS (CAS) AND DETOUR PLANS FOR EACH STAGE. INSTALL (CAS) PER APPROVED SUBMITTALS.
3. VESSEL TRAFFIC MUST REMAIN UNIMPEDED DURING CONSTRUCTION. TWO FULL WIDTH AND FULL HEIGHT CHANNELS MUST BE AVAILABLE AT ALL TIMES EXCEPT TWO DAYS OF ONE FULL WIDTH, FULL HEIGHT CHANNEL CONSTRUCTION. NAVIGATION AND CLEARANCE LIGHTS MUST BE FUNCTIONAL AT ALL TIMES DAY AND NIGHT.
4. AERATION EQUIPMENT IN HARBOR ATTACHED TO BENT 7 OF BRIDGE MUST BE OPERABLE CONTINUOUSLY FROM APRIL THROUGH NOVEMBER, UNLESS EXTENDED/MODIFIED BY THE ENGINEER. ELECTRICAL SERVICE TO AERATION EQUIPMENT SHALL REMAIN AVAILABLE AT ALL TIMES.
5. TEMPORARY TRAFFIC SIGNAL NOT IN USE DURING THIS STAGE.

LEGEND:

- CONTRACTOR STAGING AREA
- TYPE III BARRICADE
- TEMPORARY RAILING (TYPE K)
- TEMPORARY SIGNAL
- PROTECTIVE PEDESTRIAN ENCLOSURE
- MASH TL-2 SLED END TREATMENT
- TEMPORARY SIGN SINGLE POST
- (RW-3) SIGN NUMBER
- DOCK REMOVAL (BY OTHERS)
- DOCK TO BE CONSTRUCTED/RECONSTRUCTED (BY OTHERS)
- PEDESTRIAN DIRECTION ARROWS
- STRUCTURE REMOVAL
- PLACE TEMP PAVEMENT MARKING (TAPE)
- DIRECTION OF TRAFFIC
- PORTABLE DELINEATORS AT 10' MAX SPACING
- ——XX—— TEMPORARY FENCE
- ——S—— SSFM TEMPORARY BYPASS

CONSTRUCTION AREA SIGNS

SIGN CODE	SIGN MESSAGE	QUANTITY
(W20-1)	"ROAD WORK AHEAD"	1
(W16-1P)	"SHARE THE ROAD"	1
(R5-6)	NO BICYCLIST (SYMBOL)	1
(C20-2)	"END ROAD WORK"	1
(R9-3a)	NO PEDESTRIAN (SYMBOL)	2
(R11-2)	"ROAD CLOSED"	2

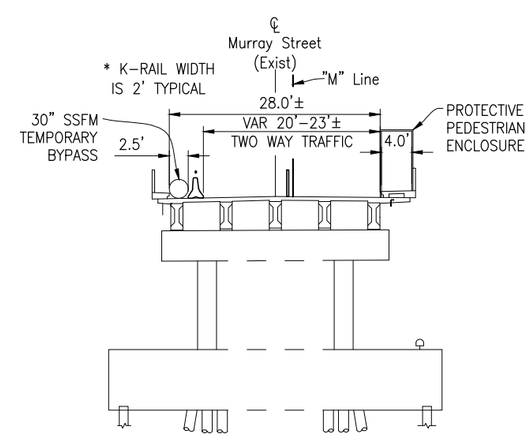

TYPICAL SECTION

	STAGE 3B – EAST HARBOR PREPARATION
STAGE 3B-1	MAINTAIN TWO-WAY TRAFFIC THROUGH CONSTRUCTION
STAGE 3B-2	CLOSE EAST HARBOR ACCESS ROAD BENEATH BRIDGE
STAGE 3B-3	PROVIDE PEDESTRIAN ACCESS TO NORTH HARBOR ALONG CONTRACTOR ACCESS ROAD OR PROVIDE DETOUR SIGNS DIRECTING PEDESTRIANS TO NORTH HARBOR VIA 7TH STREET TO MELLO LANE
STAGE 3B-4	INSTALL TEMPORARY FENCE TO SECURE CONTRACTOR WORK AREA
STAGE 3B-5	CONSTRUCT TEMPORARY SHEETPILE WALL IN BOATWORKS YARD
STAGE 3B-6	CONSTRUCT TEMPORARY ACCESS ROAD
STAGE 3B-7	CONSTRUCT PEDESTRIAN ENCLOSURE ALONG EAST ACCESS ROAD
STAGE 3B-8	REMOVE PORTION OF DOCK BY (BY PORT)

THIS PLAN IS ACCURATE FOR STAGE CONSTRUCTION AND TRAFFIC HANDLING WORK ONLY.

100% SUBMITTAL NOT FOR CONSTRUCTION

NOTE:
THE CONTRACTOR SHALL VERIFY ALL CONTROLLING FIELD DIMENSIONS BEFORE ORDERING OR FABRICATING ANY MATERIAL.

SCTH-8

REGISTERED PROFESSIONAL ENGINEER — JUSTIN L. CONKLIN — No. 80-23 — CIVIL — STATE OF CALIFORNIA
REGISTERED ENGINEER – CIVIL
TRC Engineers or its officers or agents shall not be responsible for the accuracy or completeness of electronic copies of this plan sheet

PREPARED FOR THE CITY OF SANTA CRUZ PUBLIC WORKS DEPARTMENT

	BY	CHECKED
DESIGN	M. CHRISTENSEN	M. IMBRIANI
DETAILS	G. IMBSEN	M. IMBRIANI
QUANTITIES	A. BEDAL	J. CONKLIN

ORIGINAL SCALE IN INCHES FOR REDUCED PLANS 0 1 2 3

TRC
MARK IMBRIANI
PROJECT MANAGER

BRIDGE NO. 36C0108
CONTRACT NO.
EA NO.

MURRAY STREET BRIDGE
SEISMIC RETROFIT AND BARRIER REPLACEMEN
STAGE CONSTRUCTION/TRAFFIC HANDLING PLAN STAGE 3B

DISREGARD PRINTS BEARING EARLIER REVISION DATES
REVISION DATES (PRELIMINARY STAGE ONLY): 2/19/13 9/16/13 4/17/14 5/19/15 5/22/15 7/24/15 8/29/15 5/24/21 6/22/21

SCALE 1"=20'
SHEET 63 OF 167
VAULT NO. XXXXXXX

Drawing name: H:\1161 – Santa Cruz\Road\Sheets\031– SC-TH01-XXX.dwg Layout Tab: Stage 3B Aug 27,2021 – 9:27am ACardoza

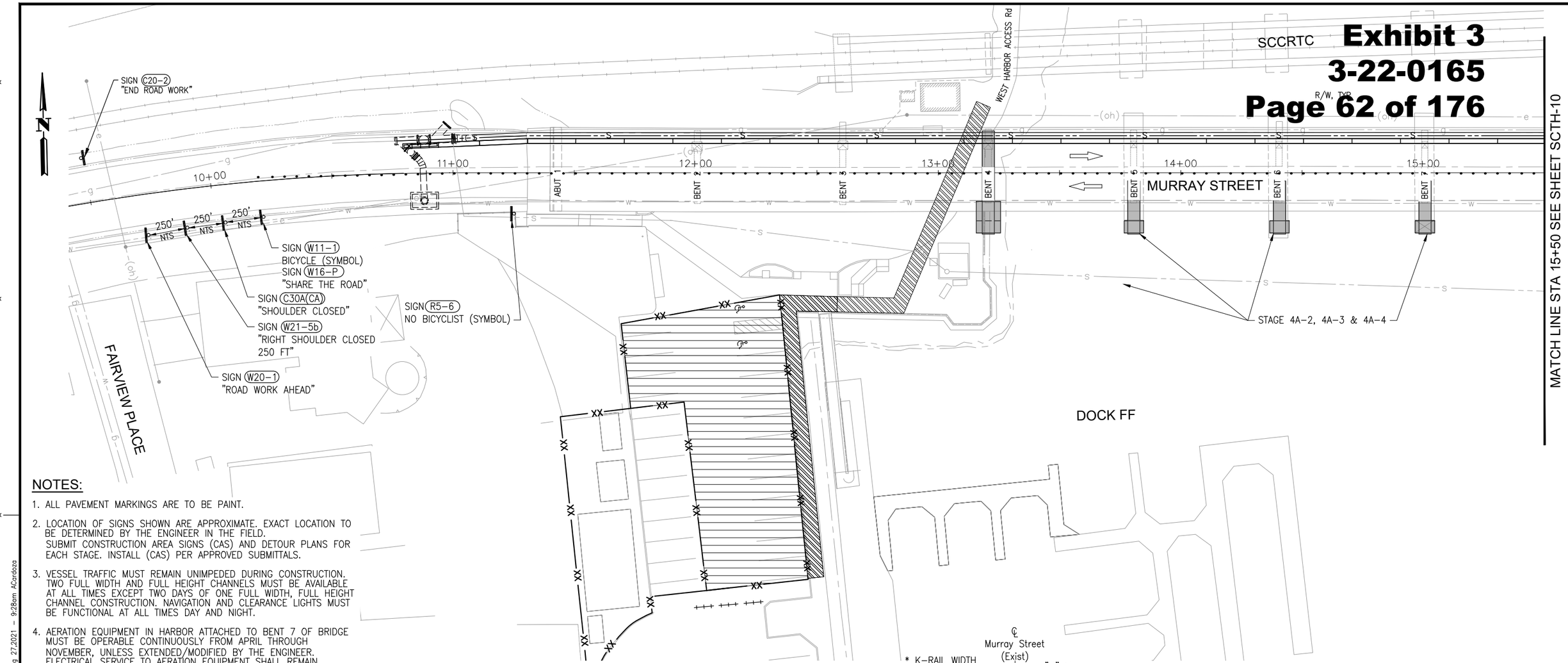

NOTES:

1. ALL PAVEMENT MARKINGS ARE TO BE PAINT.
2. LOCATION OF SIGNS SHOWN ARE APPROXIMATE. EXACT LOCATION TO BE DETERMINED BY THE ENGINEER IN THE FIELD. SUBMIT CONSTRUCTION AREA SIGNS (CAS) AND DETOUR PLANS FOR EACH STAGE. INSTALL (CAS) PER APPROVED SUBMITTALS.
3. VESSEL TRAFFIC MUST REMAIN UNIMPEDED DURING CONSTRUCTION. TWO FULL WIDTH AND FULL HEIGHT CHANNELS MUST BE AVAILABLE AT ALL TIMES EXCEPT TWO DAYS OF ONE FULL WIDTH, FULL HEIGHT CHANNEL CONSTRUCTION. NAVIGATION AND CLEARANCE LIGHTS MUST BE FUNCTIONAL AT ALL TIMES DAY AND NIGHT.
4. AERATION EQUIPMENT IN HARBOR ATTACHED TO BENT 7 OF BRIDGE MUST BE OPERABLE CONTINUOUSLY FROM APRIL THROUGH NOVEMBER, UNLESS EXTENDED/MODIFIED BY THE ENGINEER. ELECTRICAL SERVICE TO AERATION EQUIPMENT SHALL REMAIN AVAILABLE AT ALL TIMES.
5. TEMPORARY TRAFFIC SIGNAL NOT IN USE DURING THIS STAGE.

LEGEND:

- CONTRACTOR STAGING AREA
- TYPE III BARRICADE
- TEMPORARY RAILING (TYPE K)
- TEMPORARY SIGNAL
- PROTECTIVE PEDESTRIAN ENCLOSURE
- MASH TL-2 SLED END TREATMENT
- TEMPORARY SIGN SINGLE POST
- (RW-3) SIGN NUMBER
- DOCK REMOVAL (BY OTHERS)
- DOCK TO BE CONSTRUCTED/RECONSTRUCTED (BY OTHERS)
- PEDESTRIAN DIRECTION ARROWS
- STRUCTURE REMOVAL
- PLACE TEMP PAVEMENT MARKING (TAPE)
- DIRECTION OF TRAFFIC
- PORTABLE DELINEATORS AT 10' MAX SPACING
- XX TEMPORARY FENCE
- S SSFM TEMPORARY BYPASS

CONSTRUCTION AREA SIGNS

SIGN CODE	SIGN MESSAGE	QUANTITY
(W20-1)	"ROAD WORK AHEAD"	1
(W16-1P)	"SHARE THE ROAD"	1
(R5-6)	NO BICYCLIST (SYMBOL)	1
(C20-2)	"END ROAD WORK"	1

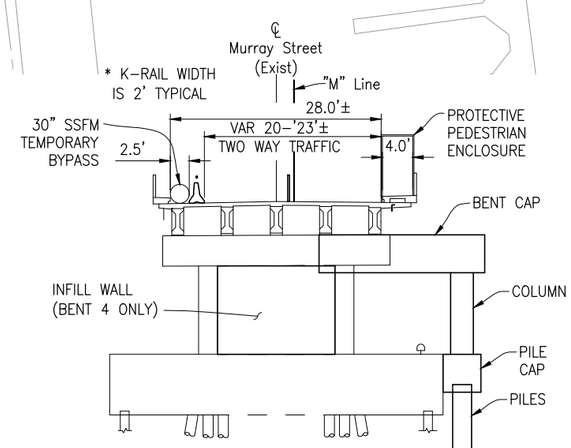

TYPICAL SECTION

	STAGE 4A – IN WATER SUBSTRUCTURE WORK ON SOUTH SIDE
STAGE 4A-1	MAINTAIN TWO-WAY TRAFFIC THROUGH CONSTRUCTION
STAGE 4A-2	INSTALL SOUTH SIDE PILES AT BENTS 4 THROUGH 8
STAGE 4A-3	CONSTRUCT PILE CAPS, COLUMNS, AND BENT CAPS AT BENTS 4 THROUGH 8
STAGE 4A-4	CONSTRUCT SOUTH SIDE FENDER SYSTEM AT BENTS 5 THROUGH 8
STAGE 4A-5	CONSTRUCT INFILL WALL AT BENT 4

100% SUBMITTAL NOT FOR CONSTRUCTION

NOTE:
THE CONTRACTOR SHALL VERIFY ALL CONTROLLING FIELD DIMENSIONS BEFORE ORDERING OR FABRICATING ANY MATERIAL.

THIS PLAN IS ACCURATE FOR STAGE CONSTRUCTION AND TRAFFIC HANDLING WORK ONLY.

SCTH-9

REGISTERED PROFESSIONAL ENGINEER JUSTIN L. CONKLIN No. 84797 Exp. 6-30-23 CIVIL STATE OF CALIFORNIA — DRAFT

REGISTERED ENGINEER – CIVIL

TRC Engineers or its officers or agents shall not be responsible for the accuracy or completeness of electronic copies of this plan sheet

CITY OF SANTA CRUZ

PREPARED FOR THE CITY OF SANTA CRUZ PUBLIC WORKS DEPARTMENT

	BY	CHECKED
DESIGN	M. CHRISTENSEN	M. IMBRIANI
DETAILS	G. IMBSEN	M. IMBRIANI
QUANTITIES	A. BEDAL	J. CONKLIN

ORIGINAL SCALE IN INCHES FOR REDUCED PLANS 0 1 2 3

TRC
MARK IMBRIANI
PROJECT MANAGER

BRIDGE NO. 36C0108
CONTRACT NO.
EA NO.

MURRAY STREET BRIDGE
SEISMIC RETROFIT AND BARRIER REPLACEMEN
STAGE CONSTRUCTION/TRAFFIC HANDLING PLAN STAGE 4A

DISREGARD PRINTS BEARING EARLIER REVISION DATES
REVISION DATES (PRELIMINARY STAGE ONLY): 2/13/13 9/18/13 4/17/14 5/19/15 5/22/15 7/24/15 9/29/15 5/24/21 6/22/21

SCALE 1"=20'
SHEET 64 OF 167
VAULT NO. XXXXXXX

Drawing name: H:\1161 – Santa Cruz\Road\Sheets\031– SC-TH01-XXX.dwg Layout Tab: Stage 4A.1 Aug 27,2021 – 9:28am ACardoza

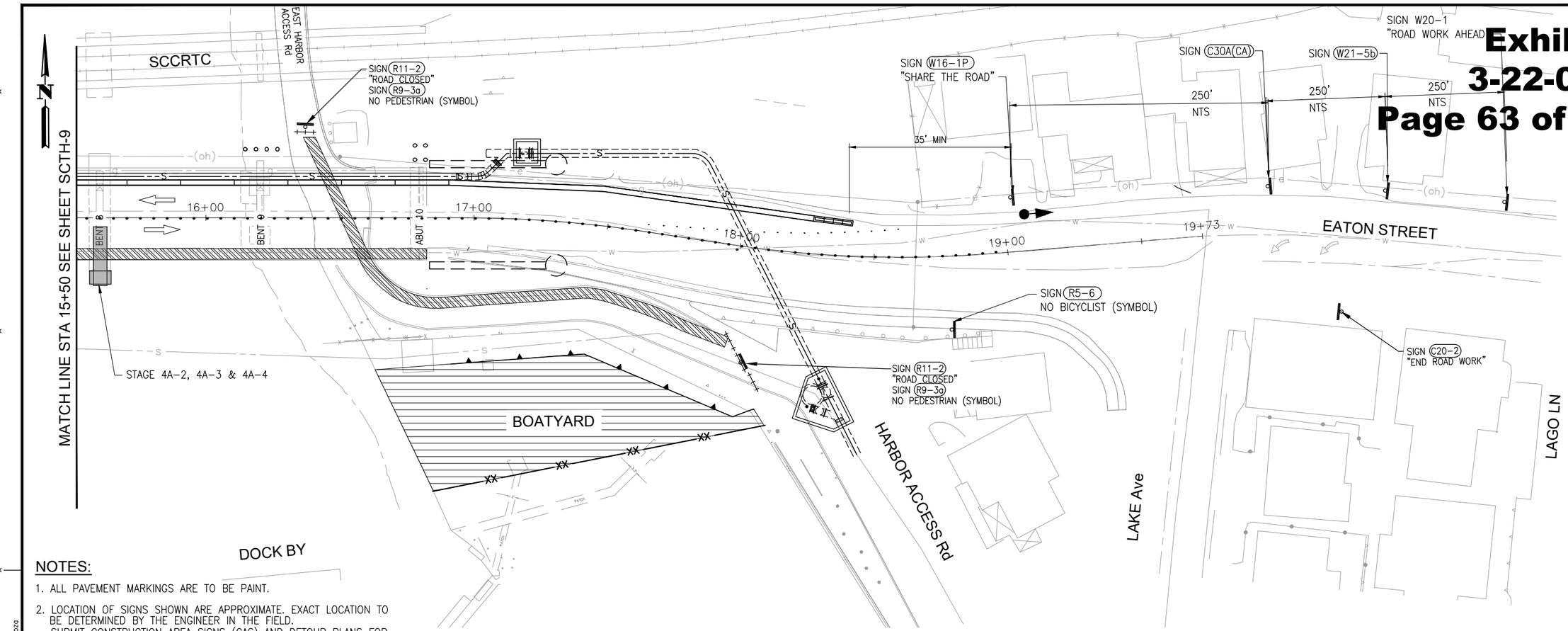

NOTES:

1. ALL PAVEMENT MARKINGS ARE TO BE PAINT.
2. LOCATION OF SIGNS SHOWN ARE APPROXIMATE. EXACT LOCATION TO BE DETERMINED BY THE ENGINEER IN THE FIELD. SUBMIT CONSTRUCTION AREA SIGNS (CAS) AND DETOUR PLANS FOR EACH STAGE. INSTALL (CAS) PER APPROVED SUBMITTALS.
3. VESSEL TRAFFIC MUST REMAIN UNIMPEDED DURING CONSTRUCTION. TWO FULL WIDTH AND FULL HEIGHT CHANNELS MUST BE AVAILABLE AT ALL TIMES EXCEPT TWO DAYS OF ONE FULL WIDTH, FULL HEIGHT CHANNEL CONSTRUCTION. NAVIGATION AND CLEARANCE LIGHTS MUST BE FUNCTIONAL AT ALL TIMES DAY AND NIGHT.
4. AERATION EQUIPMENT IN HARBOR ATTACHED TO BENT 7 OF BRIDGE MUST BE OPERABLE CONTINUOUSLY FROM APRIL THROUGH NOVEMBER, UNLESS EXTENDED/MODIFIED BY THE ENGINEER. ELECTRICAL SERVICE TO AERATION EQUIPMENT SHALL REMAIN AVAILABLE AT ALL TIMES.
5. TEMPORARY TRAFFIC SIGNAL NOT IN USE DURING THIS STAGE.

LEGEND:

- CONTRACTOR STAGING AREA
- TYPE III BARRICADE
- TEMPORARY RAILING (TYPE K)
- TEMPORARY SIGNAL
- PROTECTIVE PEDESTRIAN ENCLOSURE
- MASH TL-2 SLED END TREATMENT
- TEMPORARY SIGN SINGLE POST
- (RW-3) SIGN NUMBER
- DOCK REMOVAL (BY OTHERS)
- DOCK TO BE CONSTRUCTED/RECONSTRUCTED (BY OTHERS)
- PEDESTRIAN DIRECTION ARROWS
- STRUCTURE REMOVAL
- PLACE TEMP PAVEMENT MARKING (TAPE)
- DIRECTION OF TRAFFIC
- PORTABLE DELINEATORS AT 10' MAX SPACING
- ——XX—— TEMPORARY FENCE
- ——S—— SSFM TEMPORARY BYPASS

CONSTRUCTION AREA SIGNS

SIGN CODE	SIGN MESSAGE	QUANTITY
(W20-1)	"ROAD WORK AHEAD"	1
(W16-1P)	"SHARE THE ROAD"	1
(R5-6)	NO BICYCLIST (SYMBOL)	1
(C20-2)	"END ROAD WORK"	1
(R9-3a)	NO PEDESTRIAN (SYMBOL)	2
(R11-2)	"ROAD CLOSED"	2

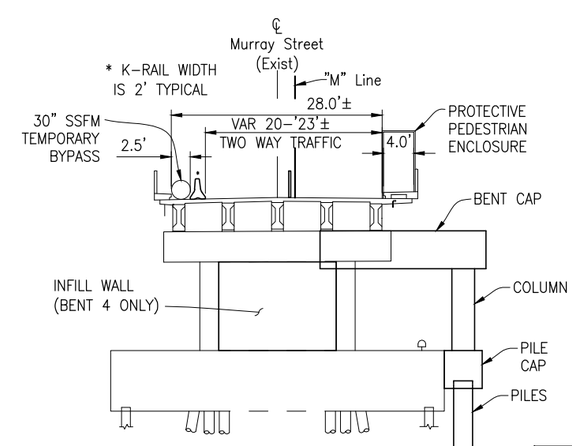

TYPICAL SECTION

	STAGE 4A – IN WATER SUBSTRUCTURE WORK ON SOUTH SIDE
STAGE 4A-1	MAINTAIN TWO-WAY TRAFFIC THROUGH CONSTRUCTION
STAGE 4A-2	INSTALL SOUTH SIDE PILES AT BENTS 4 THROUGH 8
STAGE 4A-3	CONSTRUCT PILE CAPS, COLUMNS, AND BENT CAPS AT BENTS 4 THROUGH 8
STAGE 4A-4	CONSTRUCT SOUTH SIDE FENDER SYSTEM AT BENTS 5 THROUGH 8
STAGE 4A-5	CONSTRUCT INFILL WALL AT BENT 4

100% SUBMITTAL NOT FOR CONSTRUCTION

NOTE:
THE CONTRACTOR SHALL VERIFY ALL CONTROLLING FIELD DIMENSIONS BEFORE ORDERING OR FABRICATING ANY MATERIAL

THIS PLAN IS ACCURATE FOR STAGE CONSTRUCTION AND TRAFFIC HANDLING WORK ONLY.

SCTH-10

REGISTERED PROFESSIONAL ENGINEER JUSTIN L. CONKLIN No. 85950-23 CIVIL STATE OF CALIFORNIA — REGISTERED ENGINEER – CIVIL

TRC Engineers or its officers or agents shall not be responsible for the accuracy or completeness of electronic copies of this plan sheet

CITY OF SANTA CRUZ

PREPARED FOR THE CITY OF SANTA CRUZ PUBLIC WORKS DEPARTMENT

	BY	CHECKED
DESIGN	M. CHRISTENSEN	M. IMBRIANI
DETAILS	G. IMBSEN	M. IMBRIANI
QUANTITIES	A. BEDAL	J. CONKLIN

ORIGINAL SCALE IN INCHES FOR REDUCED PLANS 0 1 2 3

TRC
MARK IMBRIANI
PROJECT MANAGER

BRIDGE NO. 36C0108
CONTRACT NO.
EA NO.

MURRAY STREET BRIDGE SEISMIC RETROFIT AND BARRIER REPLACEMEN

STAGE CONSTRUCTION/TRAFFIC HANDLING PLAN STAGE 4A

DISREGARD PRINTS BEARING EARLIER REVISION DATES

REVISION DATES (PRELIMINARY STAGE ONLY): 2/13/13 8/16/13 4/17/14 5/12/15 5/22/15 7/24/15 8/28/15 5/24/21 6/22/21

SCALE 1"=20'
SHEET 65 OF 167
VAULT NO. XXXXXXX

Drawing name: H:\1161 – Santa Cruz\Road\Sheets\031– SC-TH01-XXX.dwg Layout Tab: Stage 4A.2 Aug 27,2021 – 9:29am ACardoza

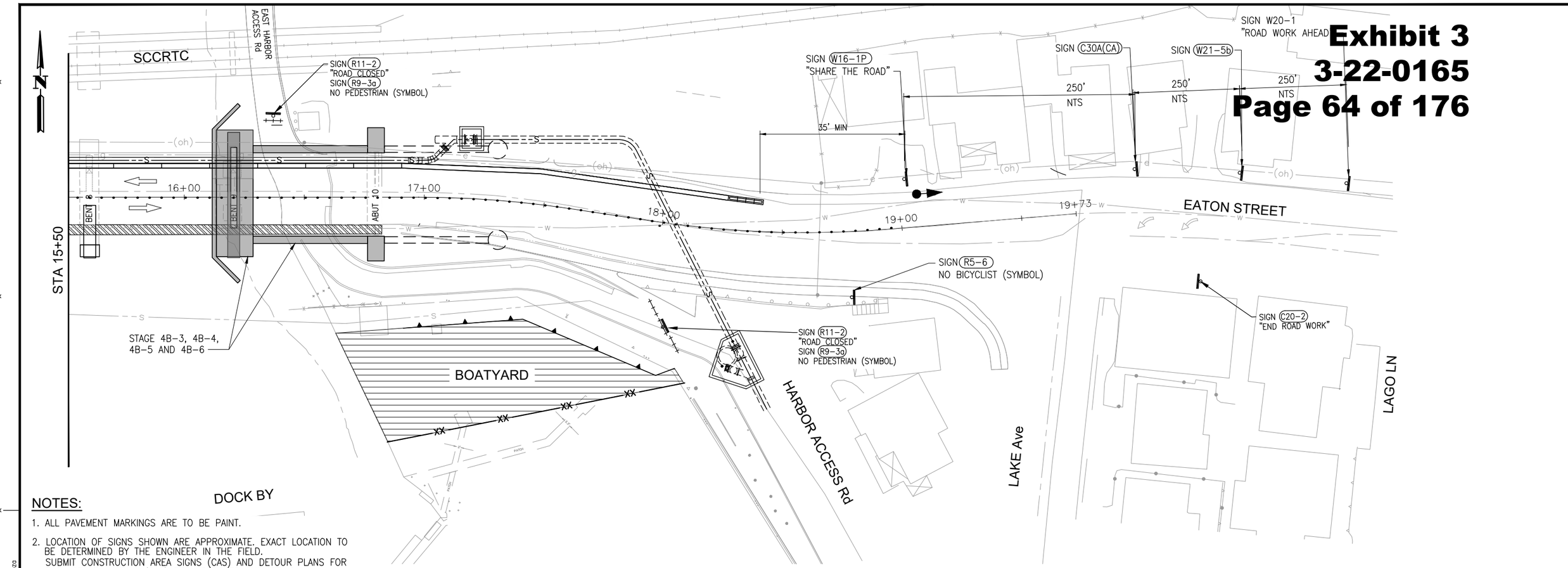

NOTES:

1. ALL PAVEMENT MARKINGS ARE TO BE PAINT.
2. LOCATION OF SIGNS SHOWN ARE APPROXIMATE. EXACT LOCATION TO BE DETERMINED BY THE ENGINEER IN THE FIELD. SUBMIT CONSTRUCTION AREA SIGNS (CAS) AND DETOUR PLANS FOR EACH STAGE. INSTALL (CAS) PER APPROVED SUBMITTALS.
3. VESSEL TRAFFIC MUST REMAIN UNIMPEDED DURING CONSTRUCTION. TWO FULL WIDTH AND FULL HEIGHT CHANNELS MUST BE AVAILABLE AT ALL TIMES EXCEPT TWO DAYS OF ONE FULL WIDTH, FULL HEIGHT CHANNEL CONSTRUCTION. NAVIGATION AND CLEARANCE LIGHTS MUST BE FUNCTIONAL AT ALL TIMES DAY AND NIGHT.
4. AERATION EQUIPMENT IN HARBOR ATTACHED TO BENT 7 OF BRIDGE MUST BE OPERABLE CONTINUOUSLY FROM APRIL THROUGH NOVEMBER, UNLESS EXTENDED/MODIFIED BY THE ENGINEER. ELECTRICAL SERVICE TO AERATION EQUIPMENT SHALL REMAIN AVAILABLE AT ALL TIMES.
5. TEMPORARY TRAFFIC SIGNAL NOT IN USE DURING THIS STAGE.

LEGEND:

- CONTRACTOR STAGING AREA
- TYPE III BARRICADE
- TEMPORARY RAILING (TYPE K)
- TEMPORARY SIGNAL
- PROTECTIVE PEDESTRIAN ENCLOSURE
- MASH TL-2 SLED END TREATMENT
- TEMPORARY SIGN SINGLE POST
- (RW-3) SIGN NUMBER
- DOCK REMOVAL (BY OTHERS)
- DOCK TO BE CONSTRUCTED/RECONSTRUCTED (BY OTHERS)
- PEDESTRIAN DIRECTION ARROWS
- STRUCTURE REMOVAL
- PLACE TEMP PAVEMENT MARKING (TAPE)
- DIRECTION OF TRAFFIC
- PORTABLE DELINEATORS AT 10' MAX SPACING
- ——XX—— TEMPORARY FENCE
- ——S—— SSFM TEMPORARY BYPASS

CONSTRUCTION AREA SIGNS

SIGN CODE	SIGN MESSAGE	QUANTITY
(W20-1)	"ROAD WORK AHEAD"	1
(W16-1P)	"SHARE THE ROAD"	1
(R5-6)	NO BICYCLIST (SYMBOL)	1
(C20-2)	"END ROAD WORK"	1
(R9-3a)	NO PEDESTRIAN (SYMBOL)	2
(R11-2)	"ROAD CLOSED"	2

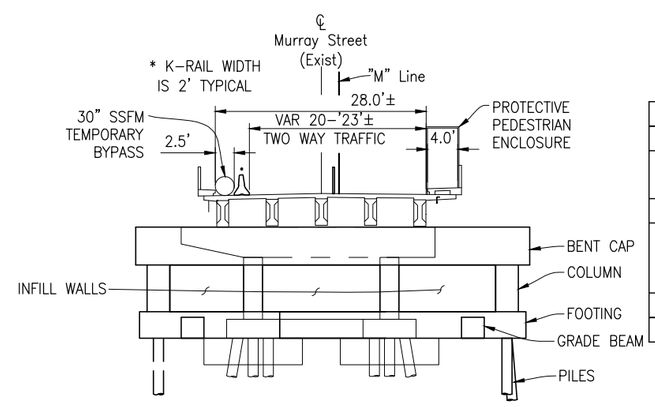

(BENT 9 SHOWN)

TYPICAL SECTION

	STAGE 4B – EAST SIDE LAND BASED SUBSTRUCTURE WORK
STAGE 4B-1	MAINTAIN TWO-WAY TRAFFIC THROUGH CONSTRUCTION
STAGE 4B-2	REMOVE PROTECTIVE PEDESTRIAN ENCLOSURE ALONG EAST ACCESS ROAD
STAGE 4B-3	INSTALL SOUTH SIDE PILES AT BENT 9 AND ABUTMENT 10
STAGE 4B-4	CONSTRUCT FOOTINGS, TSUNAMI PROTECTION CURTAIN WALL AND WINGWALLS, AND GRADE BEAMS AT BENT 9 AND ABUTMENT 10
STAGE 4B-5	CONSTRUCT COLUMNS, INFILL WALLS, AND BENT CAP AT BENT 9
STAGE 4B-6	CONSTRUCT ABUTMENT 10

THIS PLAN IS ACCURATE FOR STAGE CONSTRUCTION AND TRAFFIC HANDLING WORK ONLY.

100% SUBMITTAL NOT FOR CONSTRUCTION

NOTE:
THE CONTRACTOR SHALL VERIFY ALL CONTROLLING FIELD DIMENSIONS BEFORE ORDERING OR FABRICATING ANY MATERIAL.

SCTH-11

REGISTERED PROFESSIONAL ENGINEER JUSTIN L. CONKLIN No. 50-23 CIVIL STATE OF CALIFORNIA
REGISTERED ENGINEER – CIVIL
TRC Engineers or its officers or agents shall not be responsible for the accuracy or completeness of electronic copies of this plan sheet

CITY OF SANTA CRUZ

PREPARED FOR THE CITY OF SANTA CRUZ PUBLIC WORKS DEPARTMENT

	BY	CHECKED
DESIGN	M. CHRISTENSEN	M. IMBRIANI
DETAILS	G. IMBSEN	M. IMBRIANI
QUANTITIES	A. BEDAL	J. CONKLIN

ORIGINAL SCALE IN INCHES FOR REDUCED PLANS 0 1 2 3

TRC
MARK IMBRIANI
PROJECT MANAGER

BRIDGE NO. 36C0108
CONTRACT NO.
EA NO.

MURRAY STREET BRIDGE SEISMIC RETROFIT AND BARRIER REPLACEMEN

STAGE CONSTRUCTION/TRAFFIC HANDLING PLAN STAGE 4B

DISREGARD PRINTS BEARING EARLIER REVISION DATES
REVISION DATES (PRELIMINARY STAGE ONLY): 2/13/13 8/16/13 4/12/14 5/12/15 5/22/15 7/31/15 8/28/15 5/24/21 6/22/21

SCALE 1"=20'
SHEET 66 OF 167
VAULT NO. XXXXXXX

Drawing name: H:\1161 – Santa Cruz\Road\Sheets\031– SC-TH01-XXX.dwg Layout Tab: Stage 4B Aug 27,2021 – 9:30am ACardoza

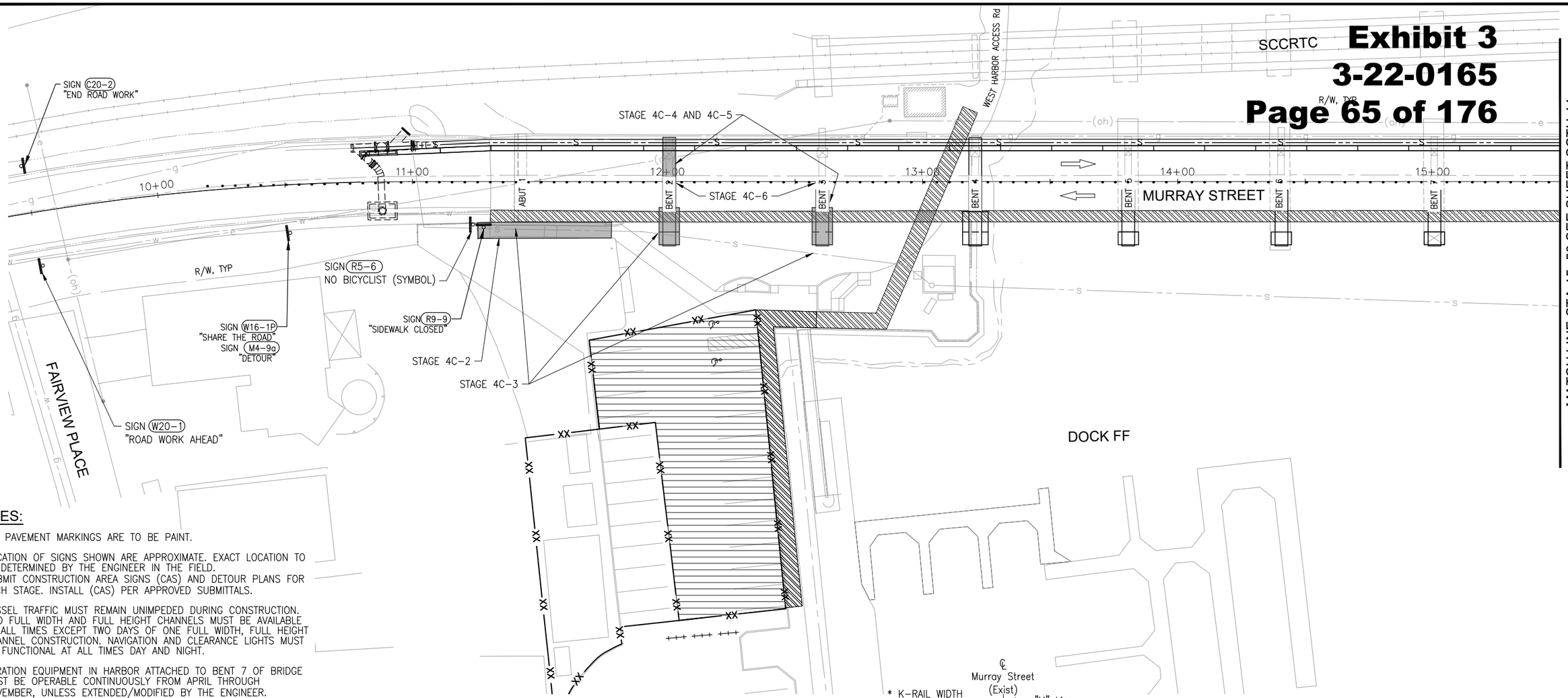

NOTES:

1. ALL PAVEMENT MARKINGS ARE TO BE PAINT.
2. LOCATION OF SIGNS SHOWN ARE APPROXIMATE. EXACT LOCATION TO BE DETERMINED BY THE ENGINEER IN THE FIELD. SUBMIT CONSTRUCTION AREA SIGNS (CAS) AND DETOUR PLANS FOR EACH STAGE. INSTALL (CAS) PER APPROVED SUBMITTALS.
3. VESSEL TRAFFIC MUST REMAIN UNIMPEDED DURING CONSTRUCTION. TWO FULL WIDTH AND FULL HEIGHT CHANNELS MUST BE AVAILABLE AT ALL TIMES EXCEPT TWO DAYS OF ONE FULL WIDTH, FULL HEIGHT CHANNEL CONSTRUCTION. NAVIGATION AND CLEARANCE LIGHTS MUST BE FUNCTIONAL AT ALL TIMES DAY AND NIGHT.
4. AERATION EQUIPMENT IN HARBOR ATTACHED TO BENT 7 OF BRIDGE MUST BE OPERABLE CONTINUOUSLY FROM APRIL THROUGH NOVEMBER, UNLESS EXTENDED/MODIFIED BY THE ENGINEER. ELECTRICAL SERVICE TO AERATION EQUIPMENT SHALL REMAIN AVAILABLE AT ALL TIMES.
5. TEMPORARY TRAFFIC SIGNAL NOT IN USE DURING THIS STAGE.

LEGEND:

- CONTRACTOR STAGING AREA
- TYPE III BARRICADE
- TEMPORARY RAILING (TYPE K)
- TEMPORARY SIGNAL
- PROTECTIVE PEDESTRIAN ENCLOSURE
- MASH TL-2 SLED END TREATMENT
- TEMPORARY SIGN SINGLE POST
- RW-3 SIGN NUMBER
- DOCK REMOVAL (BY OTHERS)
- DOCK TO BE CONSTRUCTED/RECONSTRUCTED (BY OTHERS)
- PEDESTRIAN DIRECTION ARROWS
- STRUCTURE REMOVAL
- PLACE TEMP PAVEMENT MARKING (TAPE)
- DIRECTION OF TRAFFIC
- PORTABLE DELINEATORS AT 10' MAX SPACING
- XX TEMPORARY FENCE
- S SSFM TEMPORARY BYPASS

CONSTRUCTION AREA SIGNS

SIGN CODE	SIGN MESSAGE	QUANTITY
W20-1	"ROAD WORK AHEAD"	1
W16-1P	"SHARE THE ROAD"	1
M4-9a	"DETOUR SYMBOL"	1
R5-6	NO BICYCLIST (SYMBOL)	1
R9-9	"SIDEWALK CLOSED"	1
C20-2	"END ROAD WORK"	1

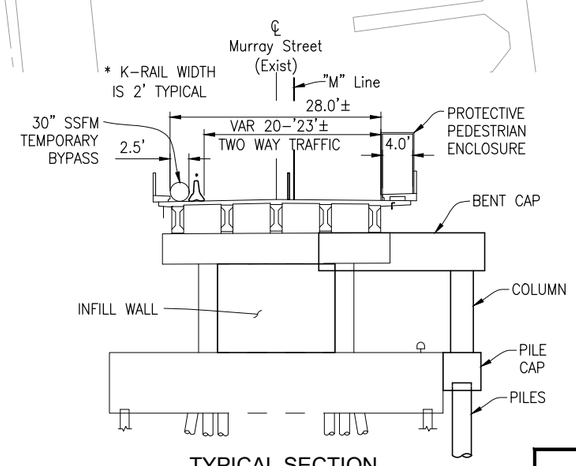

TYPICAL SECTION

	STAGE 4C – WEST SIDE LAND BASED SUBSTRUCTURE WORK
STAGE 4C-1	MAINTAIN TWO-WAY TRAFFIC THROUGH CONSTRUCTION
STAGE 4C-2	REMOVE WEST HARBOR PEDESTRIAN STAIRS
STAGE 4C-3	ABANDON AND REMOVE PORTIONS OF EXISTING SSFM TO ALLOW PILE INSTALLATION
STAGE 4C-4	INSTALL SOUTH SIDE PILES AT BENTS 2 AND 3
STAGE 4C-5	CONSTRUCT PILE CAPS, COLUMNS, AND BENT CAPS AT BENTS 2 AND 3 SOUTH
STAGE 4C-6	CONSTRUCT INFILL WALLS AND BENTS 2 AND 3 SOUTH

THIS PLAN IS ACCURATE FOR STAGE CONSTRUCTION AND TRAFFIC HANDLING WORK ONLY.

100% SUBMITTAL NOT FOR CONSTRUCTION

NOTE:
THE CONTRACTOR SHALL VERIFY ALL CONTROLLING FIELD DIMENSIONS BEFORE ORDERING OR FABRICATING ANY MATERIAL

SCTH-12

REGISTERED PROFESSIONAL ENGINEER JUSTIN L. CONKLIN No. 36-23 CIVIL STATE OF CALIFORNIA
REGISTERED ENGINEER – CIVIL
TRC Engineers or its officers or agents shall not be responsible for the accuracy or completeness of electronic copies of this plan sheet

CITY OF SANTA CRUZ
PREPARED FOR THE CITY OF SANTA CRUZ PUBLIC WORKS DEPARTMENT

	BY	CHECKED
DESIGN	M. CHRISTENSEN	M. IMBRIANI
DETAILS	G. IMBSEN	M. IMBRIANI
QUANTITIES	A. BEDAL	J. CONKLIN

ORIGINAL SCALE IN INCHES FOR REDUCED PLANS 0 1 2 3

TRC
MARK IMBRIANI
PROJECT MANAGER

BRIDGE NO. 36C0108
CONTRACT NO.
EA NO.

MURRAY STREET BRIDGE
SEISMIC RETROFIT AND BARRIER REPLACEMEN
STAGE CONSTRUCTION/TRAFFIC HANDLING PLAN STAGE 4C

DISREGARD PRINTS BEARING EARLIER REVISION DATES
REVISION DATES (PRELIMINARY STAGE ONLY): 2/19/13 9/18/13 4/17/14 5/19/15 5/22/15 7/24/15 8/29/15 5/24/21 6/22/21

SCALE 1"=20'
SHEET 67 OF 167
VAULT NO. XXXXXXX

Drawing name: H:\1161 – Santa Cruz\Road\Sheets\031– SC-TH01-XXX.dwg Layout Tab: Stage 4C Aug 27,2021 – 9:30am ACardoza

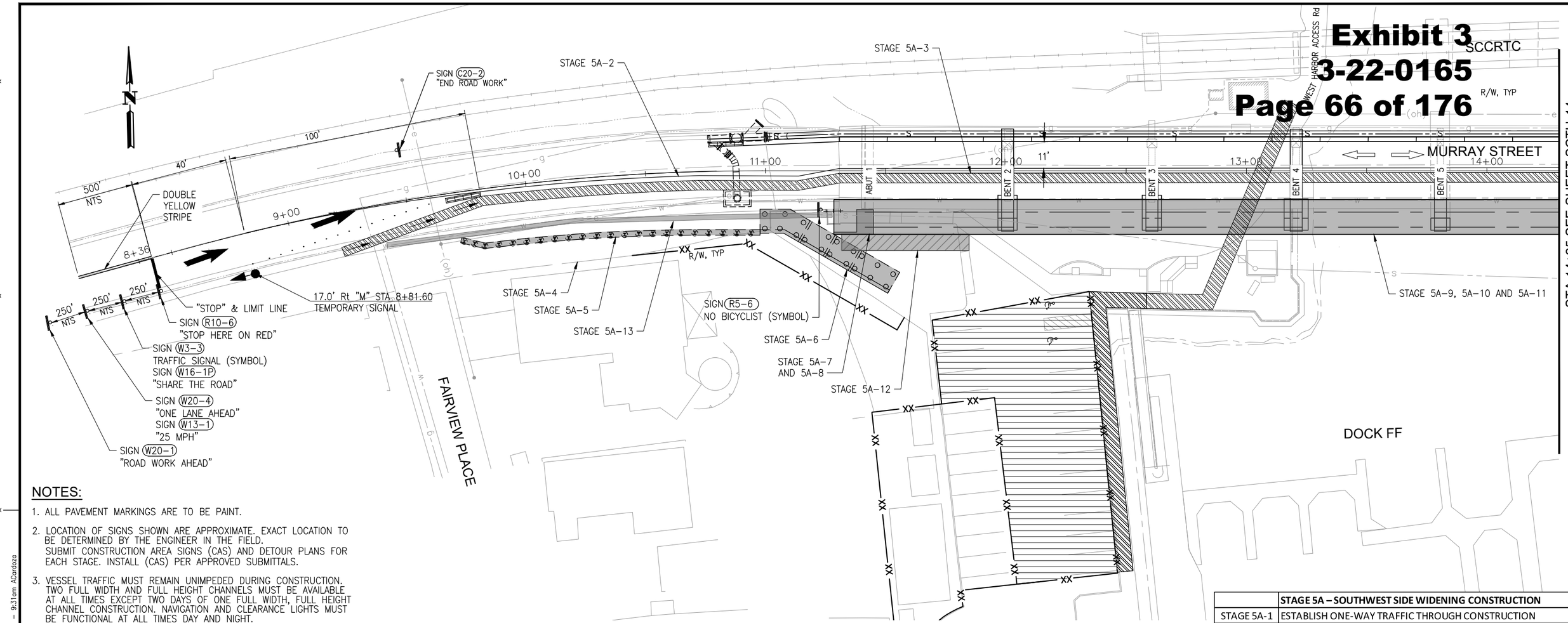

NOTES:

1. ALL PAVEMENT MARKINGS ARE TO BE PAINT.
2. LOCATION OF SIGNS SHOWN ARE APPROXIMATE. EXACT LOCATION TO BE DETERMINED BY THE ENGINEER IN THE FIELD. SUBMIT CONSTRUCTION AREA SIGNS (CAS) AND DETOUR PLANS FOR EACH STAGE. INSTALL (CAS) PER APPROVED SUBMITTALS.
3. VESSEL TRAFFIC MUST REMAIN UNIMPEDED DURING CONSTRUCTION. TWO FULL WIDTH AND FULL HEIGHT CHANNELS MUST BE AVAILABLE AT ALL TIMES EXCEPT TWO DAYS OF ONE FULL WIDTH, FULL HEIGHT CHANNEL CONSTRUCTION. NAVIGATION AND CLEARANCE LIGHTS MUST BE FUNCTIONAL AT ALL TIMES DAY AND NIGHT.
4. AERATION EQUIPMENT IN HARBOR ATTACHED TO BENT 7 OF BRIDGE MUST BE OPERABLE CONTINUOUSLY FROM APRIL THROUGH NOVEMBER, UNLESS EXTENDED/MODIFIED BY THE ENGINEER. ELECTRICAL SERVICE TO AERATION EQUIPMENT SHALL REMAIN AVAILABLE AT ALL TIMES.

LEGEND:

- CONTRACTOR STAGING AREA
- TYPE III BARRICADE
- TEMPORARY RAILING (TYPE K)
- TEMPORARY SIGNAL
- PROTECTIVE PEDESTRIAN ENCLOSURE
- MASH TL-2 SLED END TREATMENT
- TEMPORARY SIGN SINGLE POST
- (RW-3) SIGN NUMBER
- DOCK REMOVAL (BY OTHERS)
- DOCK TO BE CONSTRUCTED/RECONSTRUCTED (BY OTHERS)
- PEDESTRIAN DIRECTION ARROWS
- STRUCTURE REMOVAL
- PLACE TEMP PAVEMENT MARKING (TAPE)
- DIRECTION OF TRAFFIC
- PORTABLE DELINEATORS AT 10' MAX SPACING
- —XX— TEMPORARY FENCE
- —S— SSFM TEMPORARY BYPASS

SIGN CODE	SIGN MESSAGE	QUANTITY
(W20-1)	"ROAD WORK AHEAD"	1
(W20-4)	"ONE LANE AHEAD"	1
(W13-1)	"25 MPH"	1
(W3-3)	TRAFFIC SIGNAL (SYMBOL)	1
(W16-1P)	"SHARE THE ROAD"	1
(R10-6)	"STOP HERE ON RED"	1
(R5-6)	NO BICYCLIST (SYMBOL)	1
(C20-2)	"END ROAD WORK"	1

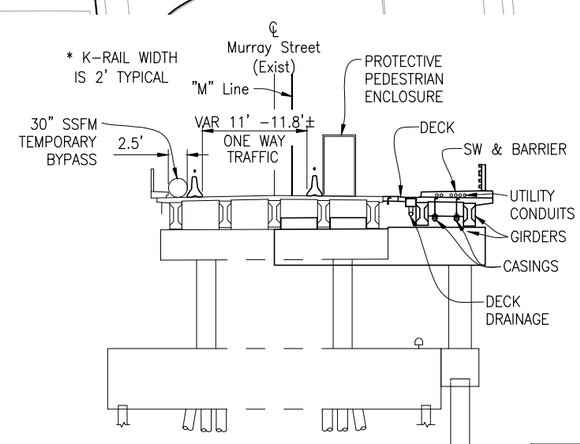

TYPICAL SECTION

	STAGE 5A – SOUTHWEST SIDE WIDENING CONSTRUCTION
STAGE 5A-1	ESTABLISH ONE-WAY TRAFFIC THROUGH CONSTRUCTION
STAGE 5A-2	PLACE TEMPORARY RAILING (TYPE K) NEAR CENTER OF BRIDGE
STAGE 5A-3	MOVE PROTECTIVE PEDESTRIAN ENCLOSURE ADJACENT TO TEMPORARY RAILING (TYPE K)
STAGE 5A-4	REMOVE O'NEILL PROPERTY FENCE AND INSTALL TEMPORARY CONSTRUCTION FENCING
STAGE 5A-5	CONSTRUCT UTILITY JOINT TRENCH IN WEST APPROACH
STAGE 5A-6	CONSTRUCT RETAINING WALL #9
STAGE 5A-7	CONSTRUCT RETAINING WALL #11
STAGE 5A-8	INSTALL SOUTH SIDE PILES AT ABUTMENT 1
STAGE 5A-9	CONSTRUCT ABUTMENT 1 WIDENING
STAGE 5A-10	REMOVE SOUTH BRIDGE SIDEWALK, BARRIER, AND OVERHANG
STAGE 5A-11	SET GIRDERS
STAGE 5A-12	CONSTRUCT BRIDGE DECK, SIDEWALK, AND BARRIER WITH UTILITY CONDUITS/CASINGS
STAGE 5A-13	CONSTRUCT WEST SIDE STAIRS
STAGE 5A-14	CONSTRUCT WEST STORM DRAIN, CITY WATERLINE, AND APPROACH SIDEWALK

THIS PLAN IS ACCURATE FOR STAGE CONSTRUCTION AND TRAFFIC HANDLING WORK ONLY.

100% SUBMITTAL NOT FOR CONSTRUCTION

NOTE:
THE CONTRACTOR SHALL VERIFY ALL CONTROLLING FIELD DIMENSIONS BEFORE ORDERING OR FABRICATING ANY MATERIAL

SCTH-13

REGISTERED PROFESSIONAL ENGINEER — JUSTIN L. CONKLIN — No. 80530 — CIVIL — STATE OF CALIFORNIA — EXPIRES 6-30-23

REGISTERED ENGINEER – CIVIL

TRC Engineers or its officers or agents shall not be responsible for the accuracy or completeness of electronic copies of this plan sheet

CITY OF SANTA CRUZ

PREPARED FOR THE CITY OF SANTA CRUZ PUBLIC WORKS DEPARTMENT

	BY	CHECKED
DESIGN	M. CHRISTENSEN	M. IMBRIANI
DETAILS	G. IMBSEN	M. IMBRIANI
QUANTITIES	A. BEDAL	J. CONKLIN

ORIGINAL SCALE IN INCHES FOR REDUCED PLANS 0 1 2 3

TRC
MARK IMBRIANI
PROJECT MANAGER

BRIDGE NO. 36C0108
CONTRACT NO.
EA NO.

MURRAY STREET BRIDGE SEISMIC RETROFIT AND BARRIER REPLACEMEN

STAGE CONSTRUCTION/TRAFFIC HANDLING PLAN STAGE 5A

DISREGARD PRINTS BEARING EARLIER REVISION DATES

REVISION DATES (PRELIMINARY STAGE ONLY): 2/13/13 9/16/13 4/17/14 3/12/15 5/22/15 7/31/15 9/29/15 5/24/21 6/22/21

SCALE 1"=20'
SHEET 68 OF 167
VAULT NO. XXXXXXX

Drawing name: H:\1161 – Santa Cruz\Road\Sheets\031– SC-TH01-XXX.dwg Layout Tab: Stage 5A.1 Aug 27,2021 – 9:31am ACardoza

CONSTRUCTION AREA SIGNS

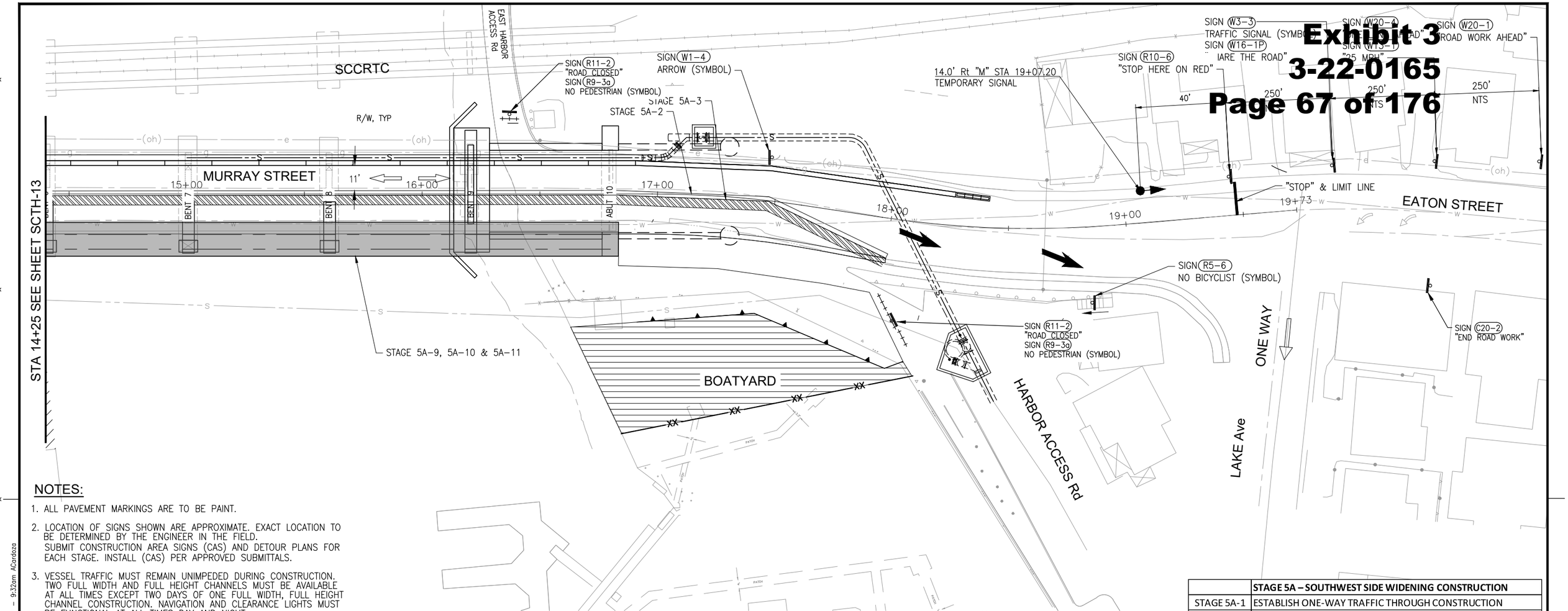

NOTES:

1. ALL PAVEMENT MARKINGS ARE TO BE PAINT.
2. LOCATION OF SIGNS SHOWN ARE APPROXIMATE. EXACT LOCATION TO BE DETERMINED BY THE ENGINEER IN THE FIELD. SUBMIT CONSTRUCTION AREA SIGNS (CAS) AND DETOUR PLANS FOR EACH STAGE. INSTALL (CAS) PER APPROVED SUBMITTALS.
3. VESSEL TRAFFIC MUST REMAIN UNIMPEDED DURING CONSTRUCTION. TWO FULL WIDTH AND FULL HEIGHT CHANNELS MUST BE AVAILABLE AT ALL TIMES EXCEPT TWO DAYS OF ONE FULL WIDTH, FULL HEIGHT CHANNEL CONSTRUCTION. NAVIGATION AND CLEARANCE LIGHTS MUST BE FUNCTIONAL AT ALL TIMES DAY AND NIGHT.
4. AERATION EQUIPMENT IN HARBOR ATTACHED TO BENT 7 OF BRIDGE MUST BE OPERABLE CONTINUOUSLY FROM APRIL THROUGH NOVEMBER, UNLESS EXTENDED/MODIFIED BY THE ENGINEER. ELECTRICAL SERVICE TO AERATION EQUIPMENT SHALL REMAIN AVAILABLE AT ALL TIMES.

LEGEND:

- CONTRACTOR STAGING AREA
- TYPE III BARRICADE
- TEMPORARY RAILING (TYPE K)
- TEMPORARY SIGNAL
- PROTECTIVE PEDESTRIAN ENCLOSURE
- MASH TL-2 SLED END TREATMENT
- TEMPORARY SIGN SINGLE POST
- (RW-3) SIGN NUMBER
- DOCK REMOVAL (BY OTHERS)
- DOCK TO BE CONSTRUCTED/RECONSTRUCTED (BY OTHERS)
- PEDESTRIAN DIRECTION ARROWS
- STRUCTURE REMOVAL
- PLACE TEMP PAVEMENT MARKING (TAPE)
- DIRECTION OF TRAFFIC
- PORTABLE DELINEATORS AT 10' MAX SPACING
- ——XX—— TEMPORARY FENCE
- ——S—— SSFM TEMPORARY BYPASS

CONSTRUCTION AREA SIGNS

SIGN CODE	SIGN MESSAGE	QUANTITY
W20-1	"ROAD WORK AHEAD"	1
W20-4	"ONE LANE AHEAD"	1
W13-1	"25 MPH"	1
W3-3	TRAFFIC SIGNAL (SYMBOL)	1
W1-4	ARROW (SYMBOL)	1
W16-1P	"SHARE THE ROAD"	1
R11-2	"ROAD CLOSED"	1
R10-6	"STOP HERE ON RED"	1
R9-3a	NO PEDESTRIAN (SYMBOL)	2
R5-6	NO BICYCLIST (SYMBOL)	1
C20-2	"END ROAD WORK"	1

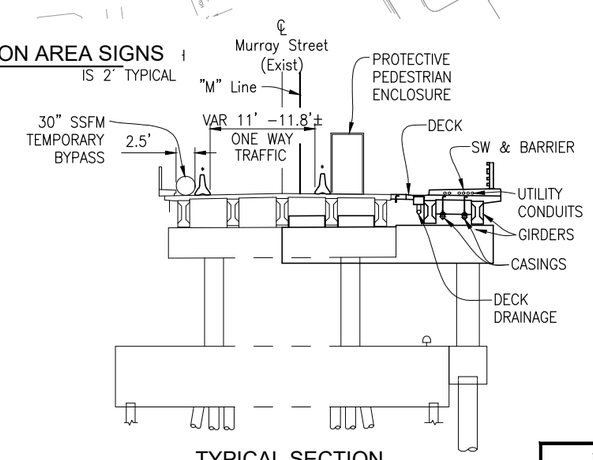

TYPICAL SECTION

	STAGE 5A – SOUTHWEST SIDE WIDENING CONSTRUCTION
STAGE 5A-1	ESTABLISH ONE-WAY TRAFFIC THROUGH CONSTRUCTION
STAGE 5A-2	PLACE TEMPORARY RAILING (TYPE K) NEAR CENTER OF BRIDGE
STAGE 5A-3	MOVE PROTECTIVE PEDESTRIAN ENCLOSURE ADJACENT TO TEMPORARY RAILING (TYPE K)
STAGE 5A-4	REMOVE O'NEILL PROPERTY FENCE AND INSTALL TEMPORARY CONSTRUCTION FENCING
STAGE 5A-5	CONSTRUCT UTILITY JOINT TRENCH IN WEST APPROACH
STAGE 5A-6	CONSTRUCT RETAINING WALL #9
STAGE 5A-7	CONSTRUCT RETAINING WALL #11
STAGE 5A-8	INSTALL SOUTH SIDE PILES AT ABUTMENT 1
STAGE 5A-9	CONSTRUCT ABUTMENT 1 WIDENING
STAGE 5A-10	REMOVE SOUTH BRIDGE SIDEWALK, BARRIER, AND OVERHANG
STAGE 5A-11	SET GIRDERS
STAGE 5A-12	CONSTRUCT BRIDGE DECK, SIDEWALK, AND BARRIER WITH UTILITY CONDUITS/CASINGS
STAGE 5A-13	CONSTRUCT WEST SIDE STAIRS
STAGE 5A-14	CONSTRUCT WEST STORM DRAIN, CITY WATERLINE, AND APPROACH SIDEWALK

100% SUBMITTAL NOT FOR CONSTRUCTION

NOTE:
THE CONTRACTOR SHALL VERIFY ALL CONTROLLING FIELD DIMENSIONS BEFORE ORDERING OR FABRICATING ANY MATERIAL.

THIS PLAN IS ACCURATE FOR STAGE CONSTRUCTION AND TRAFFIC HANDLING WORK ONLY.

REGISTERED PROFESSIONAL ENGINEER JUSTIN L. CONKLIN No. 30-23 CIVIL STATE OF CALIFORNIA — REGISTERED ENGINEER – CIVIL

TRC Engineers or its officers or agents shall not be responsible for the accuracy or completeness of electronic copies of this plan sheet

CITY OF SANTA CRUZ

PREPARED FOR THE CITY OF SANTA CRUZ PUBLIC WORKS DEPARTMENT

	BY	CHECKED
DESIGN	M. CHRISTENSEN	M. IMBRIANI
DETAILS	G. IMBSEN	M. IMBRIANI
QUANTITIES	A. BEDAL	J. CONKLIN

ORIGINAL SCALE IN INCHES FOR REDUCED PLANS 0 1 2 3

TRC
MARK IMBRIANI
PROJECT MANAGER

BRIDGE NO. 36C0108
CONTRACT NO.
EA NO.

MURRAY STREET BRIDGE SEISMIC RETROFIT AND BARRIER REPLACEMEN

STAGE CONSTRUCTION/TRAFFIC HANDLING PLAN STAGE 5A

DISREGARD PRINTS BEARING EARLIER REVISION DATES → REVISION DATES (PRELIMINARY STAGE ONLY) 2/18/13 9/18/13 4/19/14 5/19/15 5/22/15 7/24/15 9/29/15 5/24/21 6/22/21

SCALE 1"=20'
SHEET 69 OF 167
VAULT NO. XXXXXXX

Drawing name: H:\1161 – Santa Cruz\Road\Sheets\031– SC-TH01-XXX.dwg Layout Tab: Stage 5A.2 Aug 27,2021 – 9:32am ACardoza

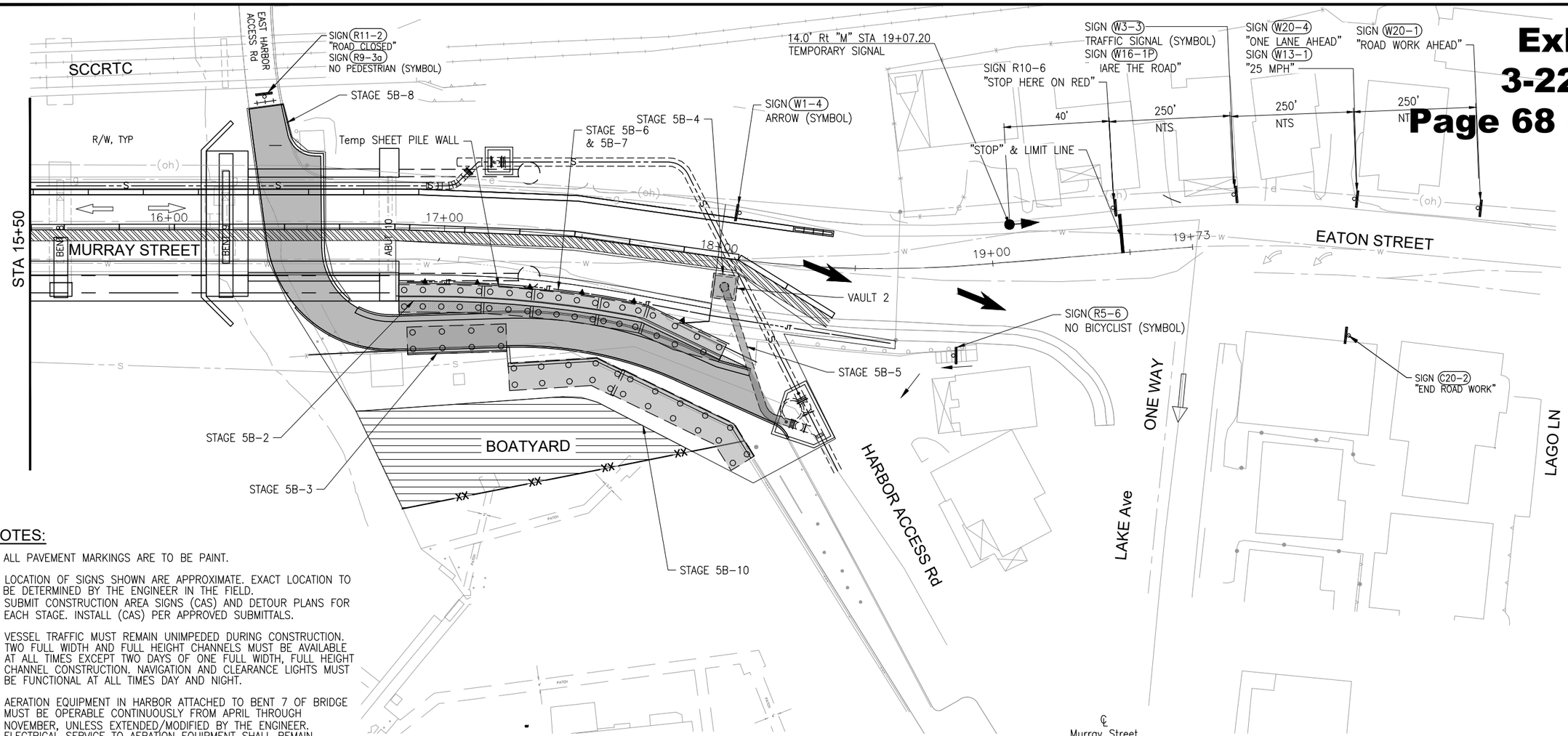

NOTES:

1. ALL PAVEMENT MARKINGS ARE TO BE PAINT.
2. LOCATION OF SIGNS SHOWN ARE APPROXIMATE. EXACT LOCATION TO BE DETERMINED BY THE ENGINEER IN THE FIELD. SUBMIT CONSTRUCTION AREA SIGNS (CAS) AND DETOUR PLANS FOR EACH STAGE. INSTALL (CAS) PER APPROVED SUBMITTALS.
3. VESSEL TRAFFIC MUST REMAIN UNIMPEDED DURING CONSTRUCTION. TWO FULL WIDTH AND FULL HEIGHT CHANNELS MUST BE AVAILABLE AT ALL TIMES EXCEPT TWO DAYS OF ONE FULL WIDTH, FULL HEIGHT CHANNEL CONSTRUCTION. NAVIGATION AND CLEARANCE LIGHTS MUST BE FUNCTIONAL AT ALL TIMES DAY AND NIGHT.
4. AERATION EQUIPMENT IN HARBOR ATTACHED TO BENT 7 OF BRIDGE MUST BE OPERABLE CONTINUOUSLY FROM APRIL THROUGH NOVEMBER, UNLESS EXTENDED/MODIFIED BY THE ENGINEER. ELECTRICAL SERVICE TO AERATION EQUIPMENT SHALL REMAIN AVAILABLE AT ALL TIMES.

LEGEND:

- CONTRACTOR STAGING AREA
- TYPE III BARRICADE
- TEMPORARY RAILING (TYPE K)
- TEMPORARY SIGNAL
- PROTECTIVE PEDESTRIAN ENCLOSURE
- MASH TL-2 SLED END TREATMENT
- TEMPORARY SIGN SINGLE POST
- (RW-3) SIGN NUMBER
- DOCK REMOVAL (BY OTHERS)
- DOCK TO BE CONSTRUCTED/RECONSTRUCTED (BY OTHERS)
- PEDESTRIAN DIRECTION ARROWS
- STRUCTURE REMOVAL
- PLACE TEMP PAVEMENT MARKING (TAPE)
- DIRECTION OF TRAFFIC
- PORTABLE DELINEATORS AT 10' MAX SPACING
- —XX— TEMPORARY FENCE
- —S— SSFM TEMPORARY BYPASS

CONSTRUCTION AREA SIGNS

SIGN CODE	SIGN MESSAGE	QUANTITY
(W20-1)	"ROAD WORK AHEAD"	1
(W20-4)	"ONE LANE AHEAD"	1
(W13-1)	"25 MPH"	1
(W3-3)	TRAFFIC SIGNAL (SYMBOL)	1
(W1-4)	ARROW (SYMBOL)	1
(W16-1P)	"SHARE THE ROAD"	1
(R11-2)	"ROAD CLOSED"	1
(R10-6)	"STOP HERE ON RED"	1
(R9-3a)	NO PEDESTRIAN (SYMBOL)	2
(R5-6)	NO BICYCLIST (SYMBOL)	1
(C20-2)	"END ROAD WORK"	1

THIS PLAN IS ACCURATE FOR STAGE CONSTRUCTION AND TRAFFIC HANDLING WORK ONLY.

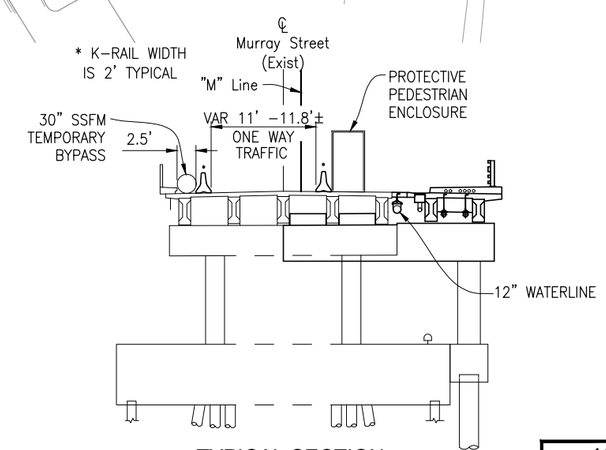

TYPICAL SECTION

	STAGE 5B – SOUTHEAST SIDE WIDENING CONSTRUCTION
STAGE 5B-1	MAINTAIN ONE-WAY TRAFFIC THROUGH CONSTRUCTION
STAGE 5B-2	CONSTRUCT RETAINING WALL #17
STAGE 5B-3	CONSTRUCT RETAINING WALL #18
STAGE 5B-4	CONSTRUCT 30" TEMPORARY SSFM FROM VAULT-5 TO FUTURE LOCATION OF VAULT-2
STAGE 5B-5	CONSTRUCT SSFM VAULT-2
STAGE 5B-6	CONSTRUCT UTILITY JOINT TRENCH IN EAST APPROACH
STAGE 5B-7	CONSTRUCT EAST STORM DRAINS, CITY WATERLINE, AND APPROACH SIDEWALK
STAGE 5B-8	CONSTRUCT EAST ACCESS ROAD WITHOUT FINAL LIFT
STAGE 5B-9	RESTORE CITY WATER
STAGE 5B-10	REMOVE TEMPORARY SHEET PILE WALL

100% SUBMITTAL NOT FOR CONSTRUCTION

NOTE:
THE CONTRACTOR SHALL VERIFY ALL CONTROLLING FIELD DIMENSIONS BEFORE ORDERING OR FABRICATING ANY MATERIAL.

REGISTERED PROFESSIONAL ENGINEER JUSTIN L. CONKLIN No. 3100 Exp. 30-23 CIVIL STATE OF CALIFORNIA

REGISTERED ENGINEER – CIVIL

TRC Engineers or its officers or agents shall not be responsible for the accuracy or completeness of electronic copies of this plan sheet

CITY OF SANTA CRUZ

PREPARED FOR THE CITY OF SANTA CRUZ PUBLIC WORKS DEPARTMENT

	BY	CHECKED
DESIGN	M. CHRISTENSEN	M. IMBRIANI
DETAILS	G. IMBSEN	M. IMBRIANI
QUANTITIES	A. BEDAL	J. CONKLIN

ORIGINAL SCALE IN INCHES FOR REDUCED PLANS 0 1 2 3

TRC
MARK IMBRIANI
PROJECT MANAGER

BRIDGE NO. 36C0108
CONTRACT NO.
EA NO.

MURRAY STREET BRIDGE SEISMIC RETROFIT AND BARRIER REPLACEMEN

STAGE CONSTRUCTION/TRAFFIC HANDLING PLAN STAGE 5B

DISREGARD PRINTS BEARING EARLIER REVISION DATES

REVISION DATES (PRELIMINARY STAGE ONLY): 2/19/13 9/18/13 4/12/14 3/12/15 5/22/15 7/31/15 8/28/15 5/24/21 6/22/21

SCALE 1"=20'
SHEET 70 OF 167
VAULT NO. XXXXXXX

Drawing name: H:\1161 – Santa Cruz\Road\Sheets\031– SC-TH01-XXX.dwg Layout Tab: Stage 5B Aug 27,2021 – 9:37am ACardoza

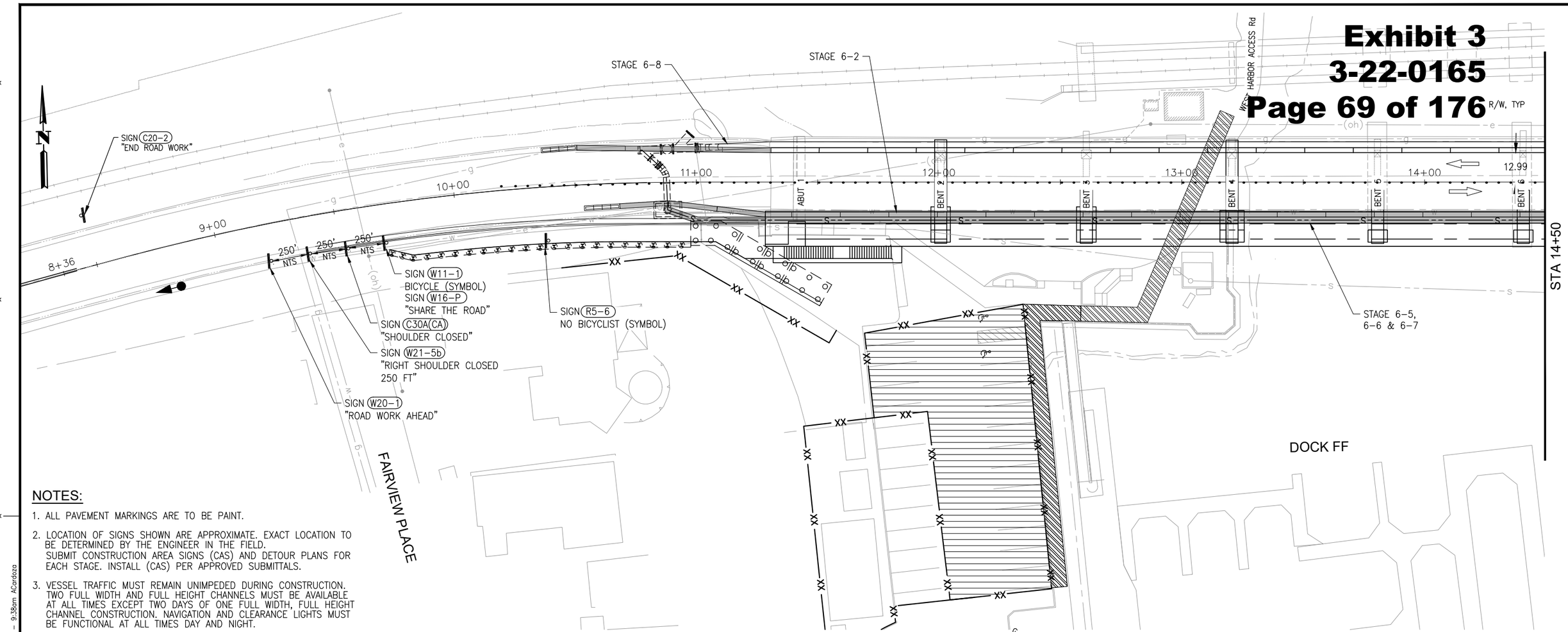

NOTES:

1. ALL PAVEMENT MARKINGS ARE TO BE PAINT.
2. LOCATION OF SIGNS SHOWN ARE APPROXIMATE. EXACT LOCATION TO BE DETERMINED BY THE ENGINEER IN THE FIELD. SUBMIT CONSTRUCTION AREA SIGNS (CAS) AND DETOUR PLANS FOR EACH STAGE. INSTALL (CAS) PER APPROVED SUBMITTALS.
3. VESSEL TRAFFIC MUST REMAIN UNIMPEDED DURING CONSTRUCTION. TWO FULL WIDTH AND FULL HEIGHT CHANNELS MUST BE AVAILABLE AT ALL TIMES EXCEPT TWO DAYS OF ONE FULL WIDTH, FULL HEIGHT CHANNEL CONSTRUCTION. NAVIGATION AND CLEARANCE LIGHTS MUST BE FUNCTIONAL AT ALL TIMES DAY AND NIGHT.
4. AERATION EQUIPMENT IN HARBOR ATTACHED TO BENT 7 OF BRIDGE MUST BE OPERABLE CONTINUOUSLY FROM APRIL THROUGH NOVEMBER, UNLESS EXTENDED/MODIFIED BY THE ENGINEER. ELECTRICAL SERVICE TO AERATION EQUIPMENT SHALL REMAIN AVAILABLE AT ALL TIMES.
5. TEMPORARY TRAFFIC SIGNAL NOT IN USE DURING THIS STAGE.

LEGEND:

- CONTRACTOR STAGING AREA
- TYPE III BARRICADE
- TEMPORARY RAILING (TYPE K)
- TEMPORARY SIGNAL
- PROTECTIVE PEDESTRIAN ENCLOSURE
- MASH TL-2 SLED END TREATMENT
- TEMPORARY SIGN SINGLE POST
- RW-3 SIGN NUMBER
- DOCK REMOVAL (BY OTHERS)
- DOCK TO BE CONSTRUCTED/RECONSTRUCTED (BY OTHERS)
- PEDESTRIAN DIRECTION ARROWS
- STRUCTURE REMOVAL
- PLACE TEMP PAVEMENT MARKING (TAPE)
- DIRECTION OF TRAFFIC
- PORTABLE DELINEATORS AT 10' MAX SPACING
- XX TEMPORARY FENCE
- S SSFM TEMPORARY BYPASS

CONSTRUCTION AREA SIGNS

SIGN CODE	SIGN MESSAGE	QUANTITY
W20-1	"ROAD WORK AHEAD"	1
W16-1P	"SHARE THE ROAD"	1
R5-6	NO BICYCLIST (SYMBOL)	1
R11-2	"ROAD CLOSED"	2
R9-3a	NO PEDESTRIAN (SYMBOL)	2
C20-2	"END ROAD WORK"	1

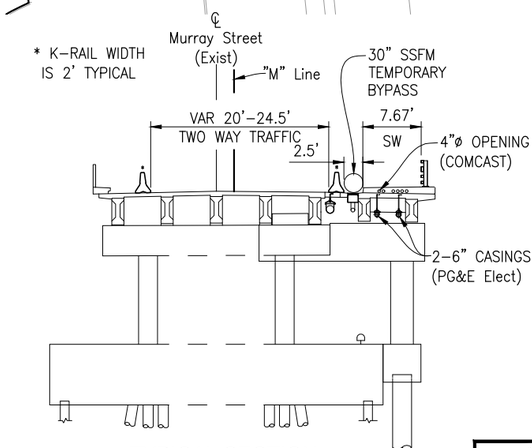

TYPICAL SECTION

	STAGE 6 – UTILITIES AND PHASE 2 BYPASS
STAGE 6-1	REMOVE PEDESTRIAN ENCLOSURE FROM BRIDGE, SOUTH SIDEWALK OPEN
STAGE 6-2	MOVE TEMPORARY RAILING (TYPE K) FROM CENTER TO SOUTH SIDE, MAINTAIN NORTH SIDE TEMPORARY RAILING (TYPE K)
STAGE 6-3	ESTABLISH TWO-WAY TRAFFIC THROUGH CONSTRUCTION
STAGE 6-4	RELOCATE UTILITIES FROM NORTH SIDE TO SOUTH SIDE (PG&E OH ELECTRICAL & COMCAST)
STAGE 6-5	CONSTRUCT 30" TEMPORARY SSFM ON SOUTH SIDE OF BRIDGE
STAGE 6-6	CONNECT TEMPORARY SSFM LINES AND VALVES
STAGE 6-7	OPEN SOUTH (PHASE 2) SSFM BYPASS LINE
STAGE 6-8	REMOVE NORTH (PHASE 1) SSFM BYPASS LINE

THIS PLAN IS ACCURATE FOR STAGE CONSTRUCTION AND TRAFFIC HANDLING WORK ONLY.

100% SUBMITTAL NOT FOR CONSTRUCTION

NOTE:
THE CONTRACTOR SHALL VERIFY ALL CONTROLLING FIELD DIMENSIONS BEFORE ORDERING OR FABRICATING ANY MATERIAL.

REGISTERED PROFESSIONAL ENGINEER JUSTIN L. CONKLIN No. 30-23 CIVIL STATE OF CALIFORNIA — REGISTERED ENGINEER – CIVIL

TRC Engineers or its officers or agents shall not be responsible for the accuracy or completeness of electronic copies of this plan sheet

CITY OF SANTA CRUZ

PREPARED FOR THE CITY OF SANTA CRUZ PUBLIC WORKS DEPARTMENT

	BY	CHECKED
DESIGN	M. CHRISTENSEN	M. IMBRIANI
DETAILS	G. IMBSEN	M. IMBRIANI
QUANTITIES	A. BEDAL	J. CONKLIN

ORIGINAL SCALE IN INCHES FOR REDUCED PLANS 0 1 2 3

TRC
MARK IMBRIANI
PROJECT MANAGER

BRIDGE NO. 36C0108
CONTRACT NO.
EA NO.

MURRAY STREET BRIDGE SEISMIC RETROFIT AND BARRIER REPLACEMEN

STAGE CONSTRUCTION/TRAFFIC HANDLING PLAN STAGE 6

DISREGARD PRINTS BEARING EARLIER REVISION DATES

REVISION DATES (PRELIMINARY STAGE ONLY): 2/18/13 9/18/13 7/17/14 5/19/15 5/22/15 7/24/15 9/29/15 5/24/21 6/22/21

SCALE 1"=20'
SHEET 71 OF 167
VAULT NO. XXXXXXX

Drawing name: H:\1161 – Santa Cruz\Road\Sheets\031– SC-TH01-XXX.dwg Layout Tab: Stage 6.1 Aug 27,2021 – 9:38am ACardoza

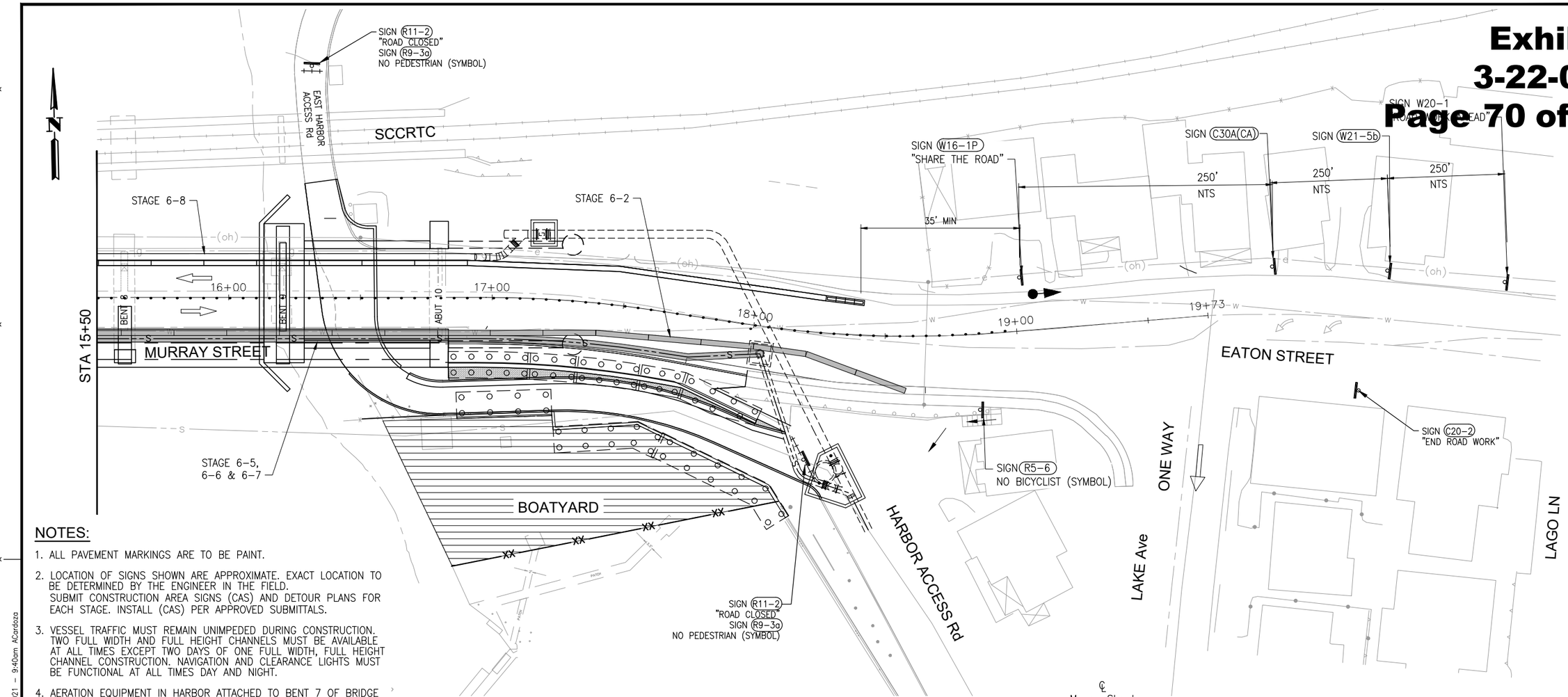

NOTES:

1. ALL PAVEMENT MARKINGS ARE TO BE PAINT.
2. LOCATION OF SIGNS SHOWN ARE APPROXIMATE. EXACT LOCATION TO BE DETERMINED BY THE ENGINEER IN THE FIELD. SUBMIT CONSTRUCTION AREA SIGNS (CAS) AND DETOUR PLANS FOR EACH STAGE. INSTALL (CAS) PER APPROVED SUBMITTALS.
3. VESSEL TRAFFIC MUST REMAIN UNIMPEDED DURING CONSTRUCTION. TWO FULL WIDTH AND FULL HEIGHT CHANNELS MUST BE AVAILABLE AT ALL TIMES EXCEPT TWO DAYS OF ONE FULL WIDTH, FULL HEIGHT CHANNEL CONSTRUCTION. NAVIGATION AND CLEARANCE LIGHTS MUST BE FUNCTIONAL AT ALL TIMES DAY AND NIGHT.
4. AERATION EQUIPMENT IN HARBOR ATTACHED TO BENT 7 OF BRIDGE MUST BE OPERABLE CONTINUOUSLY FROM APRIL THROUGH NOVEMBER, UNLESS EXTENDED/MODIFIED BY THE ENGINEER. ELECTRICAL SERVICE TO AERATION EQUIPMENT SHALL REMAIN AVAILABLE AT ALL TIMES.
5. TEMPORARY TRAFFIC SIGNAL NOT IN USE DURING THIS STAGE.

LEGEND:

- CONTRACTOR STAGING AREA
- TYPE III BARRICADE
- TEMPORARY RAILING (TYPE K)
- TEMPORARY SIGNAL
- PROTECTIVE PEDESTRIAN ENCLOSURE
- MASH TL-2 SLED END TREATMENT
- TEMPORARY SIGN SINGLE POST
- RW-3 SIGN NUMBER
- DOCK REMOVAL (BY OTHERS)
- DOCK TO BE CONSTRUCTED/RECONSTRUCTED (BY OTHERS)
- PEDESTRIAN DIRECTION ARROWS
- STRUCTURE REMOVAL
- PLACE TEMP PAVEMENT MARKING (TAPE)
- DIRECTION OF TRAFFIC
- PORTABLE DELINEATORS AT 10' MAX SPACING
- XX TEMPORARY FENCE
- S SSFM TEMPORARY BYPASS

CONSTRUCTION AREA SIGNS

SIGN CODE	SIGN MESSAGE	QUANTITY
W20-1	"ROAD WORK AHEAD"	1
W16-1P	"SHARE THE ROAD"	1
R5-6	NO BICYCLIST (SYMBOL)	1
R11-2	"ROAD CLOSED"	2
R9-3a	NO PEDESTRIAN (SYMBOL)	2
C20-2	"END ROAD WORK"	1

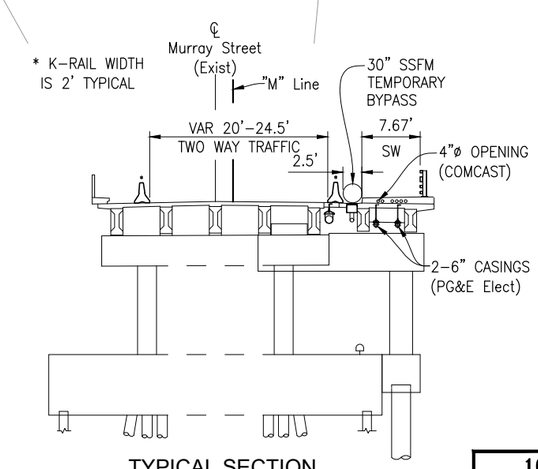

TYPICAL SECTION

	STAGE 6 – UTILITIES AND PHASE 2 BYPASS
STAGE 6-1	REMOVE PEDESTRIAN ENCLOSURE FROM BRIDGE, SOUTH SIDEWALK OPEN
STAGE 6-2	MOVE TEMPORARY RAILING (TYPE K) FROM CENTER TO SOUTH SIDE, MAINTAIN NORTH SIDE TEMPORARY RAILING (TYPE K)
STAGE 6-3	ESTABLISH TWO-WAY TRAFFIC THROUGH CONSTRUCTION
STAGE 6-4	RELOCATE UTILITIES FROM NORTH SIDE TO SOUTH SIDE (PG&E OH ELECTRICAL & COMCAST)
STAGE 6-5	CONSTRUCT 30" TEMPORARY SSFM ON SOUTH SIDE OF BRIDGE
STAGE 6-6	CONNECT TEMPORARY SSFM LINES AND VALVES
STAGE 6-7	OPEN SOUTH (PHASE 2) SSFM BYPASS LINE
STAGE 6-8	REMOVE NORTH (PHASE 1) SSFM BYPASS LINE

THIS PLAN IS ACCURATE FOR STAGE CONSTRUCTION AND TRAFFIC HANDLING WORK ONLY.

100% SUBMITTAL NOT FOR CONSTRUCTION

NOTE:
THE CONTRACTOR SHALL VERIFY ALL CONTROLLING FIELD DIMENSIONS BEFORE ORDERING OR FABRICATING ANY MATERIALS.

SCTH-17

REGISTERED PROFESSIONAL ENGINEER JUSTIN L. CONKLIN No. 81108 Exp. 30-23 CIVIL STATE OF CALIFORNIA
REGISTERED ENGINEER – CIVIL
TRC Engineers or its officers or agents shall not be responsible for the accuracy or completeness of electronic copies of this plan sheet

CITY OF SANTA CRUZ

PREPARED FOR THE CITY OF SANTA CRUZ PUBLIC WORKS DEPARTMENT

	BY	CHECKED
DESIGN	G. CHRISTENSEN	M. IMBRIANI
DETAILS	G. IMBSEN	M. IMBRIANI
QUANTITIES	A. BEDAL	J. CONKLIN

ORIGINAL SCALE IN INCHES FOR REDUCED PLANS 0 1 2 3

TRC
MARK IMBRIANI
PROJECT MANAGER

BRIDGE NO. 36C0108
CONTRACT NO.
EA NO.

MURRAY STREET BRIDGE SEISMIC RETROFIT AND BARRIER REPLACEMEN

STAGE CONSTRUCTION/TRAFFIC HANDLING PLAN STAGE 6

DISREGARD PRINTS BEARING EARLIER REVISION DATES

REVISION DATES (PRELIMINARY STAGE ONLY): 2/14/13 9/18/13 4/19/14 5/19/15 5/22/15 7/31/15 9/29/15 5/24/21 6/22/21

SCALE 1"=20'
SHEET 72 OF 167
VAULT NO. XXXXXXX

Drawing name: H:\1161 – Santa Cruz\Road\Sheets\031– SC-TH01-XXX.dwg Layout Tab: Stage 6.2 Aug 27,2021 – 9:40am ACardoza

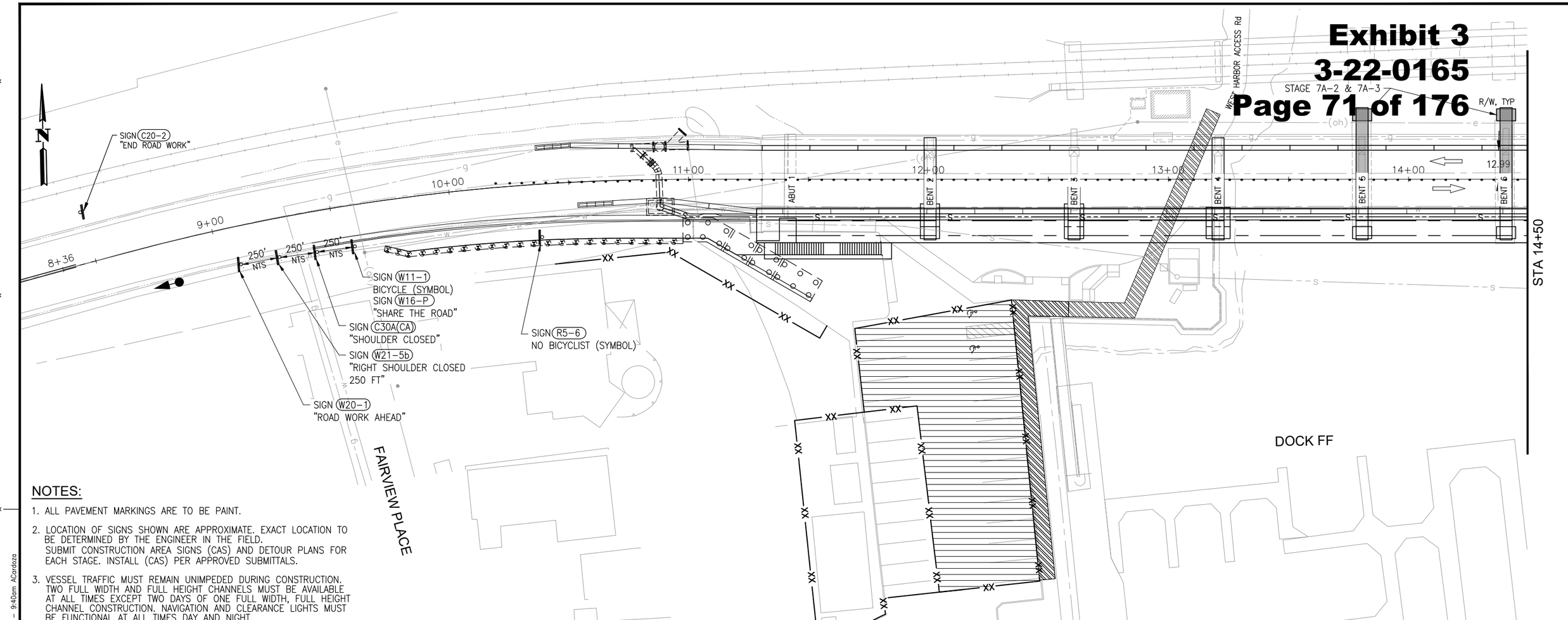

NOTES:

1. ALL PAVEMENT MARKINGS ARE TO BE PAINT.
2. LOCATION OF SIGNS SHOWN ARE APPROXIMATE. EXACT LOCATION TO BE DETERMINED BY THE ENGINEER IN THE FIELD. SUBMIT CONSTRUCTION AREA SIGNS (CAS) AND DETOUR PLANS FOR EACH STAGE. INSTALL (CAS) PER APPROVED SUBMITTALS.
3. VESSEL TRAFFIC MUST REMAIN UNIMPEDED DURING CONSTRUCTION. TWO FULL WIDTH AND FULL HEIGHT CHANNELS MUST BE AVAILABLE AT ALL TIMES EXCEPT TWO DAYS OF ONE FULL WIDTH, FULL HEIGHT CHANNEL CONSTRUCTION. NAVIGATION AND CLEARANCE LIGHTS MUST BE FUNCTIONAL AT ALL TIMES DAY AND NIGHT.
4. AERATION EQUIPMENT IN HARBOR ATTACHED TO BENT 7 OF BRIDGE MUST BE OPERABLE CONTINUOUSLY FROM APRIL THROUGH NOVEMBER, UNLESS EXTENDED/MODIFIED BY THE ENGINEER. ELECTRICAL SERVICE TO AERATION EQUIPMENT SHALL REMAIN AVAILABLE AT ALL TIMES.
5. TEMPORARY TRAFFIC SIGNAL NOT IN USE DURING THIS STAGE.

LEGEND:

- CONTRACTOR STAGING AREA
- TYPE III BARRICADE
- TEMPORARY RAILING (TYPE K)
- TEMPORARY SIGNAL
- PROTECTIVE PEDESTRIAN ENCLOSURE
- MASH TL-2 SLED END TREATMENT
- TEMPORARY SIGN SINGLE POST
- (RW-3) SIGN NUMBER
- DOCK REMOVAL (BY OTHERS)
- DOCK TO BE CONSTRUCTED/RECONSTRUCTED (BY OTHERS)
- PEDESTRIAN DIRECTION ARROWS
- STRUCTURE REMOVAL
- PLACE TEMP PAVEMENT MARKING (TAPE)
- DIRECTION OF TRAFFIC
- PORTABLE DELINEATORS AT 10' MAX SPACING
- ——XX—— TEMPORARY FENCE
- ——S—— SSFM TEMPORARY BYPASS

CONSTRUCTION AREA SIGNS

SIGN CODE	SIGN MESSAGE	QUANTITY
W20-1	"ROAD WORK AHEAD"	1
W16-1P	"SHARE THE ROAD"	1
R5-6	NO BICYCLIST (SYMBOL)	1
R11-2	"ROAD CLOSED"	2
R9-3a	NO PEDESTRIAN (SYMBOL)	2
C20-2	"END ROAD WORK"	1

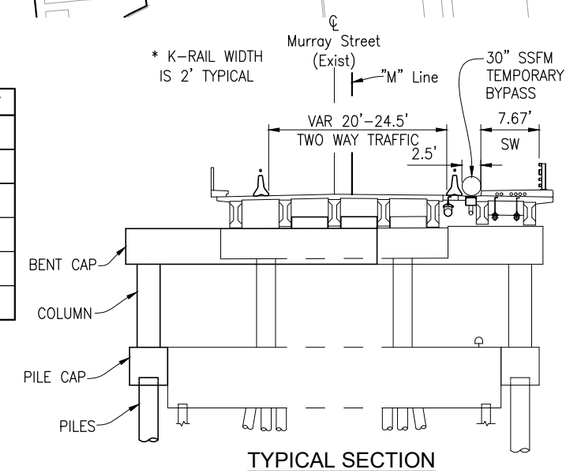

TYPICAL SECTION

	STAGE 7A – IN WATER SUBSTRUCTURE WORK ON NORTH SIDE
STAGE 7A-1	MAINTAIN TWO-WAY TRAFFIC THROUGH CONSTRUCTION
STAGE 7A-2	INSTALL NORTH SIDE PILES AT BENTS 5 THROUGH 8
STAGE 7A-3	CONSTRUCT PILE CAPS, COLUMNS, AND BENT CAPS AT BENTS 5 THROUGH 8
STAGE 7A-4	CONSTRUCT NORTH SIDE FENDER SYSTEM AT BENTS 5 THROUGH 8

THIS PLAN IS ACCURATE FOR STAGE CONSTRUCTION AND TRAFFIC HANDLING WORK ONLY.

100% SUBMITTAL NOT FOR CONSTRUCTION

NOTE:
THE CONTRACTOR SHALL VERIFY ALL CONTROLLING FIELD DIMENSIONS BEFORE ORDERING OR FABRICATING ANY MATERIAL.

REGISTERED PROFESSIONAL ENGINEER JUSTIN L. CONKLIN No. 81750 CIVIL 30-23 STATE OF CALIFORNIA — PRELIMINARY

REGISTERED ENGINEER – CIVIL

TRC Engineers or its officers or agents shall not be responsible for the accuracy or completeness of electronic copies of this plan sheet

CITY OF SANTA CRUZ

PREPARED FOR THE CITY OF SANTA CRUZ PUBLIC WORKS DEPARTMENT

	BY	CHECKED
DESIGN	M. CHRISTENSEN	M. IMBRIANI
DETAILS	G. IMBSEN	M. IMBRIANI
QUANTITIES	A. BEDAL	J. CONKLIN

ORIGINAL SCALE IN INCHES FOR REDUCED PLANS 0 1 2 3

TRC
MARK IMBRIANI
PROJECT MANAGER

BRIDGE NO. 36C0108
CONTRACT NO.
EA NO.

MURRAY STREET BRIDGE SEISMIC RETROFIT AND BARRIER REPLACEMEN

STAGE CONSTRUCTION/TRAFFIC HANDLING PLAN STAGE 7A

DISREGARD PRINTS BEARING EARLIER REVISION DATES

REVISION DATES (PRELIMINARY STAGE ONLY): 2/18/13 9/18/13 4/19/14 5/19/15 5/22/15 7/31/15 9/29/15 5/24/21 6/22/21

SCALE 1"=20'
SHEET 73 OF 167
VAULT NO. XXXXXXX

Drawing name: H:\1161 – Santa Cruz\Road\Sheets\031– SC-TH01-XXX.dwg Layout Tab: Stage 7A.1 Aug 27,2021 – 9:40am ACardoza

SCTH

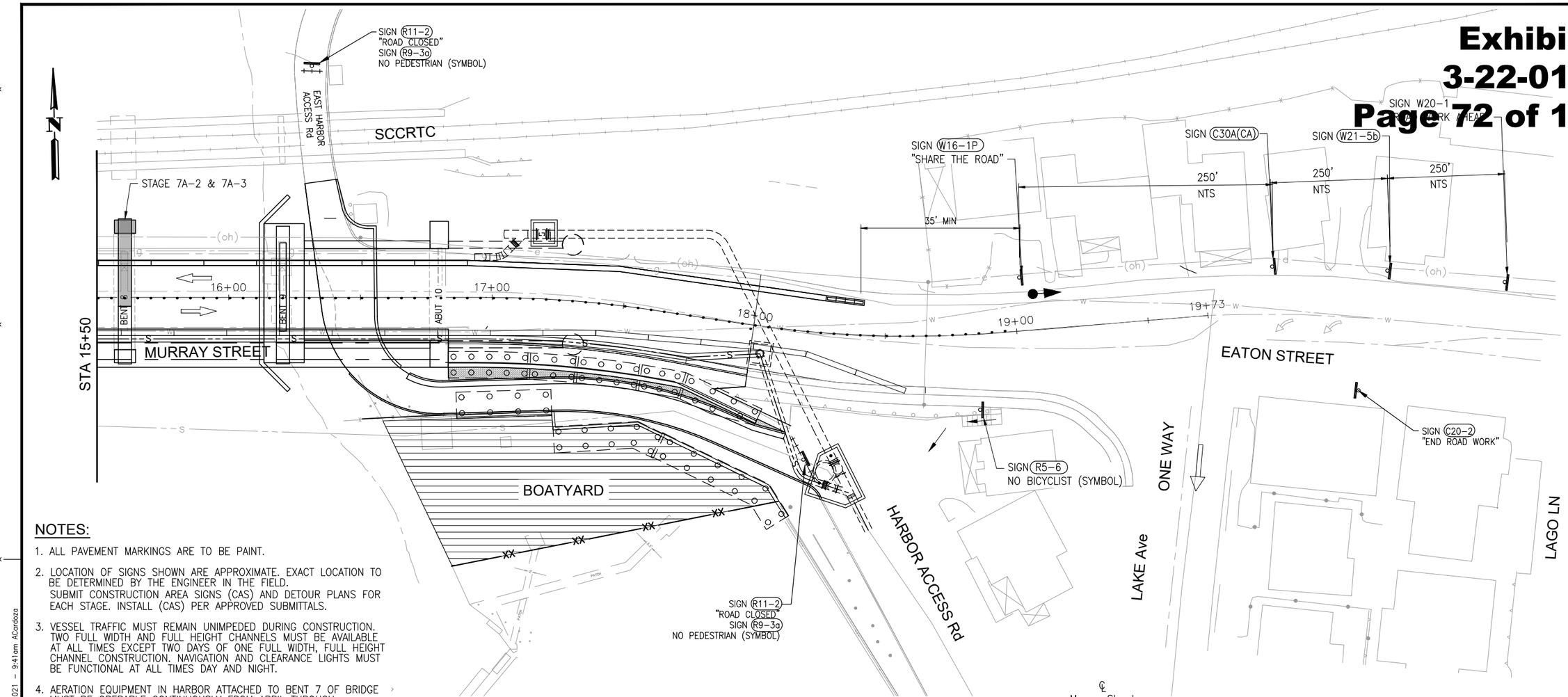

NOTES:

1. ALL PAVEMENT MARKINGS ARE TO BE PAINT.
2. LOCATION OF SIGNS SHOWN ARE APPROXIMATE. EXACT LOCATION TO BE DETERMINED BY THE ENGINEER IN THE FIELD. SUBMIT CONSTRUCTION AREA SIGNS (CAS) AND DETOUR PLANS FOR EACH STAGE. INSTALL (CAS) PER APPROVED SUBMITTALS.
3. VESSEL TRAFFIC MUST REMAIN UNIMPEDED DURING CONSTRUCTION. TWO FULL WIDTH AND FULL HEIGHT CHANNELS MUST BE AVAILABLE AT ALL TIMES EXCEPT TWO DAYS OF ONE FULL WIDTH, FULL HEIGHT CHANNEL CONSTRUCTION. NAVIGATION AND CLEARANCE LIGHTS MUST BE FUNCTIONAL AT ALL TIMES DAY AND NIGHT.
4. AERATION EQUIPMENT IN HARBOR ATTACHED TO BENT 7 OF BRIDGE MUST BE OPERABLE CONTINUOUSLY FROM APRIL THROUGH NOVEMBER, UNLESS EXTENDED/MODIFIED BY THE ENGINEER. ELECTRICAL SERVICE TO AERATION EQUIPMENT SHALL REMAIN AVAILABLE AT ALL TIMES.
5. TEMPORARY TRAFFIC SIGNAL NOT IN USE DURING THIS STAGE.

CONSTRUCTION AREA SIGNS

SIGN CODE	SIGN MESSAGE	QUANTITY
W20-1	"ROAD WORK AHEAD"	1
W16-1P	"SHARE THE ROAD"	1
R5-6	NO BICYCLIST (SYMBOL)	1
R11-2	"ROAD CLOSED"	2
R9-3a	NO PEDESTRIAN (SYMBOL)	2
C20-2	"END ROAD WORK"	1

LEGEND:

- CONTRACTOR STAGING AREA
- TYPE III BARRICADE
- TEMPORARY RAILING (TYPE K)
- TEMPORARY SIGNAL
- PROTECTIVE PEDESTRIAN ENCLOSURE
- MASH TL-2 SLED END TREATMENT
- TEMPORARY SIGN SINGLE POST
- RW-3 SIGN NUMBER
- DOCK REMOVAL (BY OTHERS)
- DOCK TO BE CONSTRUCTED/RECONSTRUCTED (BY OTHERS)
- PEDESTRIAN DIRECTION ARROWS
- STRUCTURE REMOVAL
- PLACE TEMP PAVEMENT MARKING (TAPE)
- DIRECTION OF TRAFFIC
- PORTABLE DELINEATORS AT 10' MAX SPACING
- XX TEMPORARY FENCE
- S SSFM TEMPORARY BYPASS

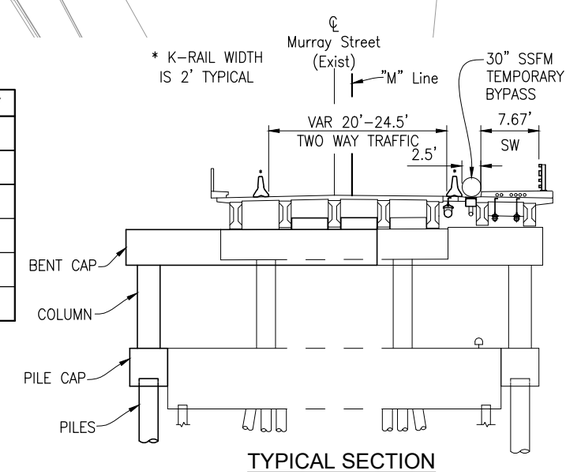

TYPICAL SECTION

	STAGE 7A – IN WATER SUBSTRUCTURE WORK ON NORTH SIDE
STAGE 7A-1	MAINTAIN TWO-WAY TRAFFIC THROUGH CONSTRUCTION
STAGE 7A-2	INSTALL NORTH SIDE PILES AT BENTS 5 THROUGH 8
STAGE 7A-3	CONSTRUCT PILE CAPS, COLUMNS, AND BENT CAPS AT BENTS 5 THROUGH 8
STAGE 7A-4	CONSTRUCT NORTH SIDE FENDER SYSTEM AT BENTS 5 THROUGH 8

100% SUBMITTAL NOT FOR CONSTRUCTION

NOTE:
THE CONTRACTOR SHALL VERIFY ALL CONTROLLING FIELD DIMENSIONS BEFORE ORDERING OR FABRICATING ANY MATERIALS

THIS PLAN IS ACCURATE FOR STAGE CONSTRUCTION AND TRAFFIC HANDLING WORK ONLY.

SCTH-19

REGISTERED PROFESSIONAL ENGINEER JUSTIN L. CONKLIN No. 81108 Exp. 30-23 CIVIL STATE OF CALIFORNIA — REGISTERED ENGINEER – CIVIL

TRC Engineers or its officers or agents shall not be responsible for the accuracy or completeness of electronic copies of this plan sheet

CITY OF SANTA CRUZ

PREPARED FOR THE CITY OF SANTA CRUZ PUBLIC WORKS DEPARTMENT

	BY	CHECKED
DESIGN	M. CHRISTENSEN	M. IMBRIANI
DETAILS	G. IMBSEN	M. IMBRIANI
QUANTITIES	A. BEDAL	J. CONKLIN

ORIGINAL SCALE IN INCHES FOR REDUCED PLANS 0 1 2 3

TRC
MARK IMBRIANI
PROJECT MANAGER

BRIDGE NO. 36C0108
CONTRACT NO.
EA NO.

MURRAY STREET BRIDGE
SEISMIC RETROFIT AND BARRIER REPLACEMEN
STAGE CONSTRUCTION/TRAFFIC HANDLING PLAN STAGE 7A

DISREGARD PRINTS BEARING EARLIER REVISION DATES
REVISION DATES (PRELIMINARY STAGE ONLY): 2/12/13 9/18/13 4/19/14 5/12/15 5/22/15 7/31/15 9/29/15 5/24/21 6/22/21

SCALE 1"=20'
SHEET 74 OF 167
VAULT NO. XXXXXXX

Drawing name: H:\1161 – Santa Cruz\Road\Sheets\031– SC-TH01-XXX.dwg Layout Tab: Stage 7A.2 Aug 27,2021 – 9:41am ACardoza

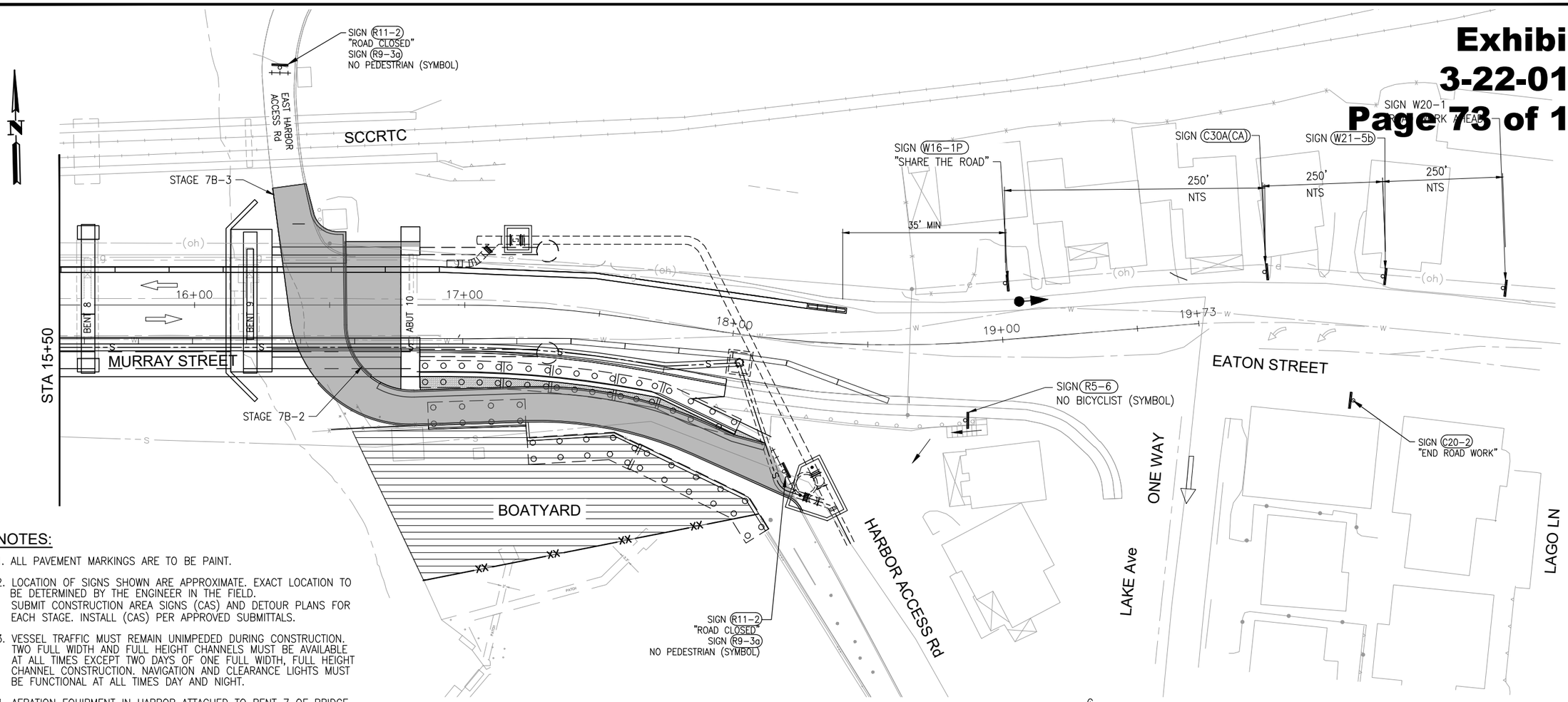

NOTES:

1. ALL PAVEMENT MARKINGS ARE TO BE PAINT.
2. LOCATION OF SIGNS SHOWN ARE APPROXIMATE. EXACT LOCATION TO BE DETERMINED BY THE ENGINEER IN THE FIELD. SUBMIT CONSTRUCTION AREA SIGNS (CAS) AND DETOUR PLANS FOR EACH STAGE. INSTALL (CAS) PER APPROVED SUBMITTALS.
3. VESSEL TRAFFIC MUST REMAIN UNIMPEDED DURING CONSTRUCTION. TWO FULL WIDTH AND FULL HEIGHT CHANNELS MUST BE AVAILABLE AT ALL TIMES EXCEPT TWO DAYS OF ONE FULL WIDTH, FULL HEIGHT CHANNEL CONSTRUCTION. NAVIGATION AND CLEARANCE LIGHTS MUST BE FUNCTIONAL AT ALL TIMES DAY AND NIGHT.
4. AERATION EQUIPMENT IN HARBOR ATTACHED TO BENT 7 OF BRIDGE MUST BE OPERABLE CONTINUOUSLY FROM APRIL THROUGH NOVEMBER, UNLESS EXTENDED/MODIFIED BY THE ENGINEER. ELECTRICAL SERVICE TO AERATION EQUIPMENT SHALL REMAIN AVAILABLE AT ALL TIMES.
5. TEMPORARY TRAFFIC SIGNAL NOT IN USE DURING THIS STAGE.

CONSTRUCTION AREA SIGNS

SIGN CODE	SIGN MESSAGE	QUANTITY
W20-1	"ROAD WORK AHEAD"	1
W16-1P	"SHARE THE ROAD"	1
R5-6	NO BICYCLIST (SYMBOL)	1
R11-2	"ROAD CLOSED"	2
R9-3a	NO PEDESTRIAN (SYMBOL)	2
C20-2	"END ROAD WORK"	1

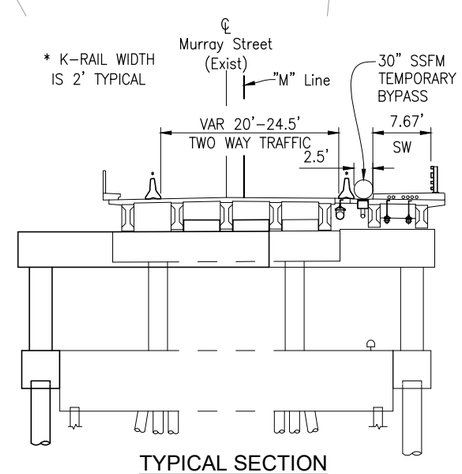

TYPICAL SECTION

	STAGE 7B – EAST SIDE LAND BASED SUBSTRUCTURE WORK
STAGE 7B-1	MAINTAIN TWO-WAY TRAFFIC THROUGH CONSTRUCTION
STAGE 7B-2	CONSTRUCT ABUTMENT 10 SLOPE PAVING
STAGE 7B-3	COMPLETE EAST ACCESS ROAD INCLUDING FINAL ASPHALT LIFT AND CURB

LEGEND:

- CONTRACTOR STAGING AREA
- TYPE III BARRICADE
- TEMPORARY RAILING (TYPE K)
- TEMPORARY SIGNAL
- PROTECTIVE PEDESTRIAN ENCLOSURE
- MASH TL-2 SLED END TREATMENT
- TEMPORARY SIGN SINGLE POST
- (RW-3) SIGN NUMBER
- DOCK REMOVAL (BY OTHERS)
- DOCK TO BE CONSTRUCTED/RECONSTRUCTED (BY OTHERS)
- PEDESTRIAN DIRECTION ARROWS
- STRUCTURE REMOVAL
- PLACE TEMP PAVEMENT MARKING (TAPE)
- DIRECTION OF TRAFFIC
- PORTABLE DELINEATORS AT 10' MAX SPACING
- —XX— TEMPORARY FENCE
- —S— SSFM TEMPORARY BYPASS

THIS PLAN IS ACCURATE FOR STAGE CONSTRUCTION AND TRAFFIC HANDLING WORK ONLY.

100% SUBMITTAL NOT FOR CONSTRUCTION

NOTE:
THE CONTRACTOR SHALL VERIFY ALL CONTROLLING FIELD DIMENSIONS BEFORE ORDERING OR FABRICATING ANY MATERIAL

SCTH-20

REGISTERED PROFESSIONAL ENGINEER — JUSTIN L. CONKLIN — No. 80530 — CIVIL — STATE OF CALIFORNIA — DRAFT

REGISTERED ENGINEER – CIVIL

TRC Engineers or its officers or agents shall not be responsible for the accuracy or completeness of electronic copies of this plan sheet

CITY OF SANTA CRUZ

PREPARED FOR THE CITY OF SANTA CRUZ PUBLIC WORKS DEPARTMENT

	BY	CHECKED
DESIGN	M. CHRISTENSEN	M. IMBRIANI
DETAILS	G. IMBSEN	M. IMBRIANI
QUANTITIES	A. BEDAL	J. CONKLIN

ORIGINAL SCALE IN INCHES FOR REDUCED PLANS 0 1 2 3

TRC
MARK IMBRIANI
PROJECT MANAGER

BRIDGE NO. 36C0108
CONTRACT NO.
EA NO.

MURRAY STREET BRIDGE
SEISMIC RETROFIT AND BARRIER REPLACEMEN
STAGE CONSTRUCTION/TRAFFIC HANDLING PLAN STAGE 7B

DISREGARD PRINTS BEARING EARLIER REVISION DATES
REVISION DATES (PRELIMINARY STAGE ONLY): 2/13/13 8/16/13 4/12/14 3/12/15 5/22/15 7/24/15 8/29/15 5/24/21 6/22/21

SCALE 1"=20'
SHEET 75 OF 167
VAULT NO. XXXXXXX

Drawing name: H:\1161 – Santa Cruz\Road\Sheets\031– SC–TH01–XXX.dwg Layout Tab: Stage 7B Aug 27,2021 – 9:42am ACardoza

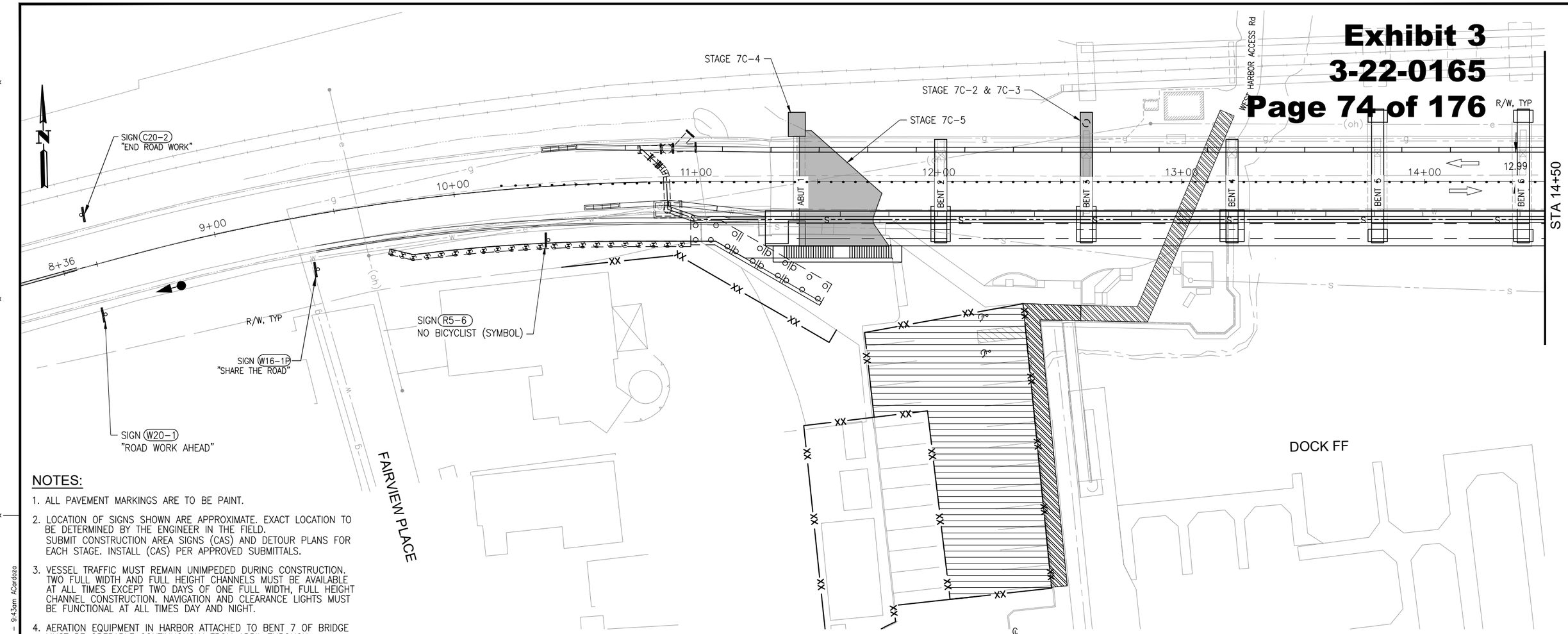

NOTES:

1. ALL PAVEMENT MARKINGS ARE TO BE PAINT.
2. LOCATION OF SIGNS SHOWN ARE APPROXIMATE. EXACT LOCATION TO BE DETERMINED BY THE ENGINEER IN THE FIELD. SUBMIT CONSTRUCTION AREA SIGNS (CAS) AND DETOUR PLANS FOR EACH STAGE. INSTALL (CAS) PER APPROVED SUBMITTALS.
3. VESSEL TRAFFIC MUST REMAIN UNIMPEDED DURING CONSTRUCTION. TWO FULL WIDTH AND FULL HEIGHT CHANNELS MUST BE AVAILABLE AT ALL TIMES EXCEPT TWO DAYS OF ONE FULL WIDTH, FULL HEIGHT CHANNEL CONSTRUCTION. NAVIGATION AND CLEARANCE LIGHTS MUST BE FUNCTIONAL AT ALL TIMES DAY AND NIGHT.
4. AERATION EQUIPMENT IN HARBOR ATTACHED TO BENT 7 OF BRIDGE MUST BE OPERABLE CONTINUOUSLY FROM APRIL THROUGH NOVEMBER, UNLESS EXTENDED/MODIFIED BY THE ENGINEER. ELECTRICAL SERVICE TO AERATION EQUIPMENT SHALL REMAIN AVAILABLE AT ALL TIMES.
5. TEMPORARY TRAFFIC SIGNAL NOT IN USE DURING THIS STAGE.

CONSTRUCTION AREA SIGNS

SIGN CODE	SIGN MESSAGE	QUANTITY
W20-1	"ROAD WORK AHEAD"	1
W16-1P	"SHARE THE ROAD"	1
R5-6	NO BICYCLIST (SYMBOL)	1
C20-2	"END ROAD WORK"	1

LEGEND:

- CONTRACTOR STAGING AREA
- TYPE III BARRICADE
- TEMPORARY RAILING (TYPE K)
- TEMPORARY SIGNAL
- PROTECTIVE PEDESTRIAN ENCLOSURE
- MASH TL-2 SLED END TREATMENT
- TEMPORARY SIGN SINGLE POST
- RW-3 SIGN NUMBER
- DOCK REMOVAL (BY OTHERS)
- DOCK TO BE CONSTRUCTED/RECONSTRUCTED (BY OTHERS)
- PEDESTRIAN DIRECTION ARROWS
- STRUCTURE REMOVAL
- PLACE TEMP PAVEMENT MARKING (TAPE)
- DIRECTION OF TRAFFIC
- PORTABLE DELINEATORS AT 10' MAX SPACING
- XX TEMPORARY FENCE
- S SSFM TEMPORARY BYPASS

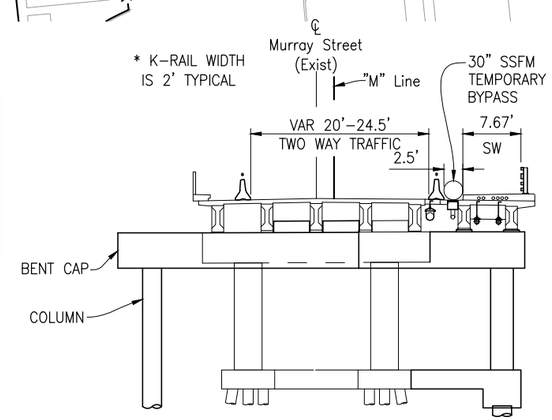

BENT 3 SHOWN

TYPICAL SECTION

	STAGE 7C – WEST SIDE LAND BASED SUBSTRUCTURE WORK
STAGE 7C-1	MAINTAIN TWO-WAY TRAFFIC THROUGH CONSTRUCTION
STAGE 7C-2	INSTALL NORTH SIDE PILES AT BENT 3
STAGE 7C-3	CONSTRUCT PILE CAP, COLUMN, AND BENT CAP AT BENT 3
STAGE 7C-4	CONSTRUCT ABUTMENT 1
STAGE 7C-5	CONSTRUCT ABUTMENT 1 SLOPE PAVING, DRAINAGE, ETC.

100% SUBMITTAL NOT FOR CONSTRUCTION

NOTE:
THE CONTRACTOR SHALL VERIFY ALL CONTROLLING FIELD DIMENSIONS BEFORE ORDERING OR FABRICATING ANY MATERIAL.

THIS PLAN IS ACCURATE FOR STAGE CONSTRUCTION AND TRAFFIC HANDLING WORK ONLY.

REGISTERED PROFESSIONAL ENGINEER — JUSTIN L. CONKLIN — No. 81557 — 30-23 — CIVIL — STATE OF CALIFORNIA
REGISTERED ENGINEER – CIVIL
TRC Engineers or its officers or agents shall not be responsible for the accuracy or completeness of electronic copies of this plan sheet

CITY OF SANTA CRUZ
PREPARED FOR THE CITY OF SANTA CRUZ PUBLIC WORKS DEPARTMENT

	BY	CHECKED
DESIGN	M. CHRISTENSEN	M. IMBRIANI
DETAILS	G. IMBSEN	M. IMBRIANI
QUANTITIES	A. BEDAL	J. CONKLIN

ORIGINAL SCALE IN INCHES FOR REDUCED PLANS 0 1 2 3

TRC
MARK IMBRIANI
PROJECT MANAGER

BRIDGE NO. 36C0108
CONTRACT NO.
EA NO.

MURRAY STREET BRIDGE SEISMIC RETROFIT AND BARRIER REPLACEMEN
STAGE CONSTRUCTION/TRAFFIC HANDLING PLAN STAGE 7C

DISREGARD PRINTS BEARING EARLIER REVISION DATES
REVISION DATES (PRELIMINARY STAGE ONLY): 2/19/13 9/16/13 4/17/14 3/12/15 5/22/15 7/31/15 8/28/15 5/24/21 6/22/21

SCALE 1"=20'
SHEET 76 OF 167
VAULT NO. XXXXXXX

Drawing name: H:\1161 – Santa Cruz\Road\Sheets\031 – SC-TH01-XXX.dwg Layout Tab: Stage 7C Aug 27,2021 – 9:43am ACardoza

SCTH

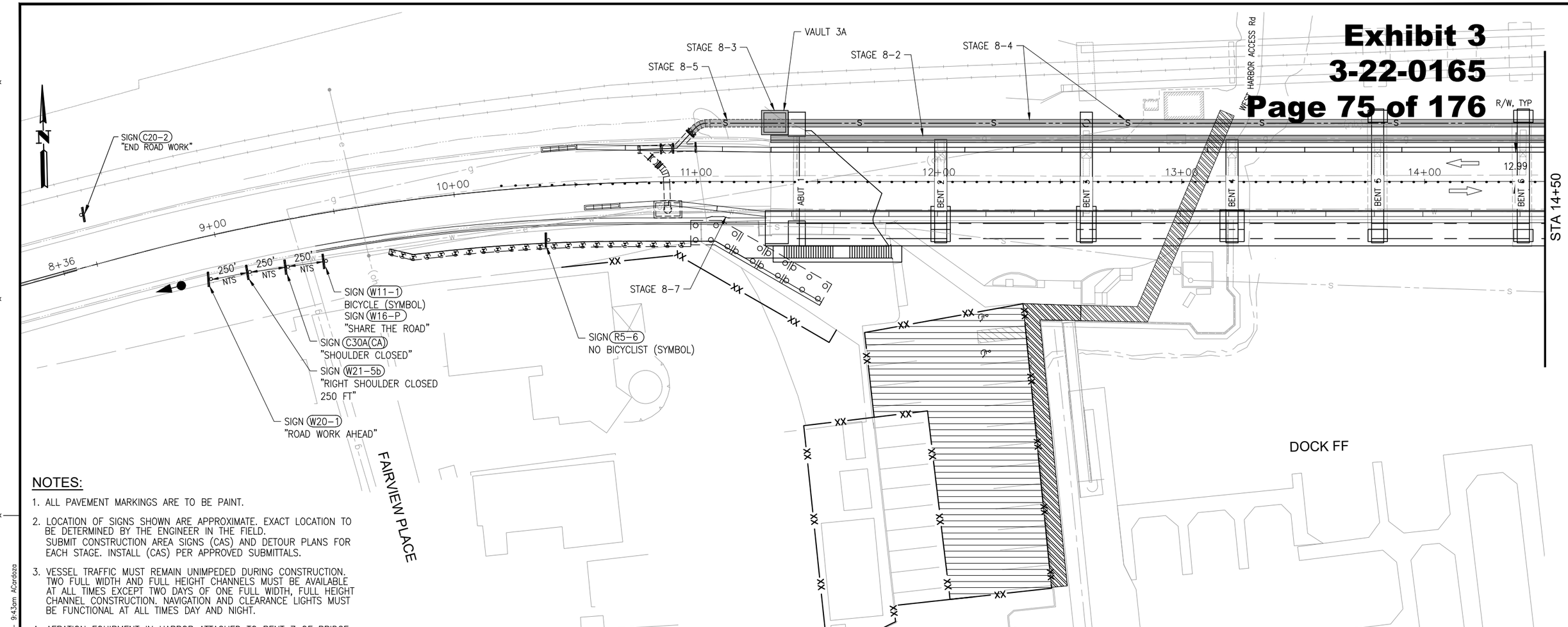

NOTES:

1. ALL PAVEMENT MARKINGS ARE TO BE PAINT.
2. LOCATION OF SIGNS SHOWN ARE APPROXIMATE. EXACT LOCATION TO BE DETERMINED BY THE ENGINEER IN THE FIELD. SUBMIT CONSTRUCTION AREA SIGNS (CAS) AND DETOUR PLANS FOR EACH STAGE. INSTALL (CAS) PER APPROVED SUBMITTALS.
3. VESSEL TRAFFIC MUST REMAIN UNIMPEDED DURING CONSTRUCTION. TWO FULL WIDTH AND FULL HEIGHT CHANNELS MUST BE AVAILABLE AT ALL TIMES EXCEPT TWO DAYS OF ONE FULL WIDTH, FULL HEIGHT CHANNEL CONSTRUCTION. NAVIGATION AND CLEARANCE LIGHTS MUST BE FUNCTIONAL AT ALL TIMES DAY AND NIGHT.
4. AERATION EQUIPMENT IN HARBOR ATTACHED TO BENT 7 OF BRIDGE MUST BE OPERABLE CONTINUOUSLY FROM APRIL THROUGH NOVEMBER, UNLESS EXTENDED/MODIFIED BY THE ENGINEER. ELECTRICAL SERVICE TO AERATION EQUIPMENT SHALL REMAIN AVAILABLE AT ALL TIMES.
5. TEMPORARY TRAFFIC SIGNAL NOT IN USE DURING THIS STAGE.

CONSTRUCTION AREA SIGNS

SIGN CODE	SIGN MESSAGE	QUANTITY
W20-1	"ROAD WORK AHEAD"	1
W16-1P	"SHARE THE ROAD"	1
R5-6	NO BICYCLIST (SYMBOL)	1
C20-2	"END ROAD WORK"	1

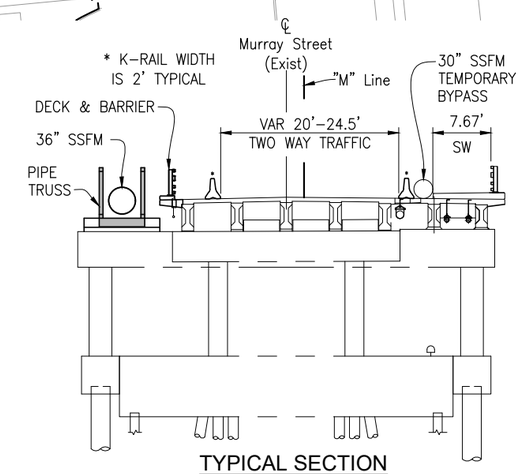

TYPICAL SECTION

	STAGE 8 – NORTH SIDE BRIDGE WORK
STAGE 8-1	MAINTAIN TWO-WAY TRAFFIC THROUGH CONSTRUCTION
STAGE 8-2	DEMO NORTH BRIDGE OVERHANG AND CONSTRUCT NEW OVERHANG, BARRIER, AND DECK DRAINAGE
STAGE 8-3	SET PRECAST VAULT-3A AND VAULT-3B
STAGE 8-4	SET PIPE TRUSS AND PIPE ANCHORAGES
STAGE 8-5	INSTALL FINAL 36" SSFM
STAGE 8-6	OPEN FINAL SSFM
STAGE 8-7	REMOVE SOUTH (PHASE 2) SSFM BYPASS LINE

LEGEND:

- CONTRACTOR STAGING AREA
- TYPE III BARRICADE
- TEMPORARY RAILING (TYPE K)
- TEMPORARY SIGNAL
- PROTECTIVE PEDESTRIAN ENCLOSURE
- MASH TL-2 SLED END TREATMENT
- TEMPORARY SIGN SINGLE POST
- RW-3 SIGN NUMBER
- DOCK REMOVAL (BY OTHERS)
- DOCK TO BE CONSTRUCTED/RECONSTRUCTED (BY OTHERS)
- PEDESTRIAN DIRECTION ARROWS
- STRUCTURE REMOVAL
- PLACE TEMP PAVEMENT MARKING (TAPE)
- DIRECTION OF TRAFFIC
- PORTABLE DELINEATORS AT 10' MAX SPACING
- XX TEMPORARY FENCE
- S SSFM TEMPORARY BYPASS

THIS PLAN IS ACCURATE FOR STAGE CONSTRUCTION AND TRAFFIC HANDLING WORK ONLY.

100% SUBMITTAL NOT FOR CONSTRUCTION

NOTE:
THE CONTRACTOR SHALL VERIFY ALL CONTROLLING FIELD DIMENSIONS BEFORE ORDERING OR FABRICATING ANY MATERIAL.

REGISTERED PROFESSIONAL ENGINEER JUSTIN L. CONKLIN No. 80-23 CIVIL STATE OF CALIFORNIA — REGISTERED ENGINEER – CIVIL

TRC Engineers or its officers or agents shall not be responsible for the accuracy or completeness of electronic copies of this plan sheet

CITY OF SANTA CRUZ

PREPARED FOR THE CITY OF SANTA CRUZ PUBLIC WORKS DEPARTMENT

	BY	CHECKED
DESIGN	M. CHRISTENSEN	M. IMBRIANI
DETAILS	G. IMBSEN	M. IMBRIANI
QUANTITIES	A. BEDAL	J. CONKLIN

ORIGINAL SCALE IN INCHES FOR REDUCED PLANS 0 1 2 3

TRC
MARK IMBRIANI
PROJECT MANAGER

BRIDGE NO. 36C0108
CONTRACT NO.
EA NO.

MURRAY STREET BRIDGE SEISMIC RETROFIT AND BARRIER REPLACEMEN

STAGE CONSTRUCTION/TRAFFIC HANDLING PLAN STAGE 8

DISREGARD PRINTS BEARING EARLIER REVISION DATES

REVISION DATES (PRELIMINARY STAGE ONLY): 2/13/13 9/16/13 4/17/14 3/12/15 5/22/15 7/31/15 9/29/15 5/24/21 6/22/21

SCALE 1"=20'
SHEET 77 OF 167
VAULT NO. XXXXXXX

Drawing name: H:\1161 – Santa Cruz\Road\Sheets\031– SC-TH01-XXX.dwg Layout Tab: Stage 8.1 Aug 27,2021 – 9:43am ACardoza

SCTH

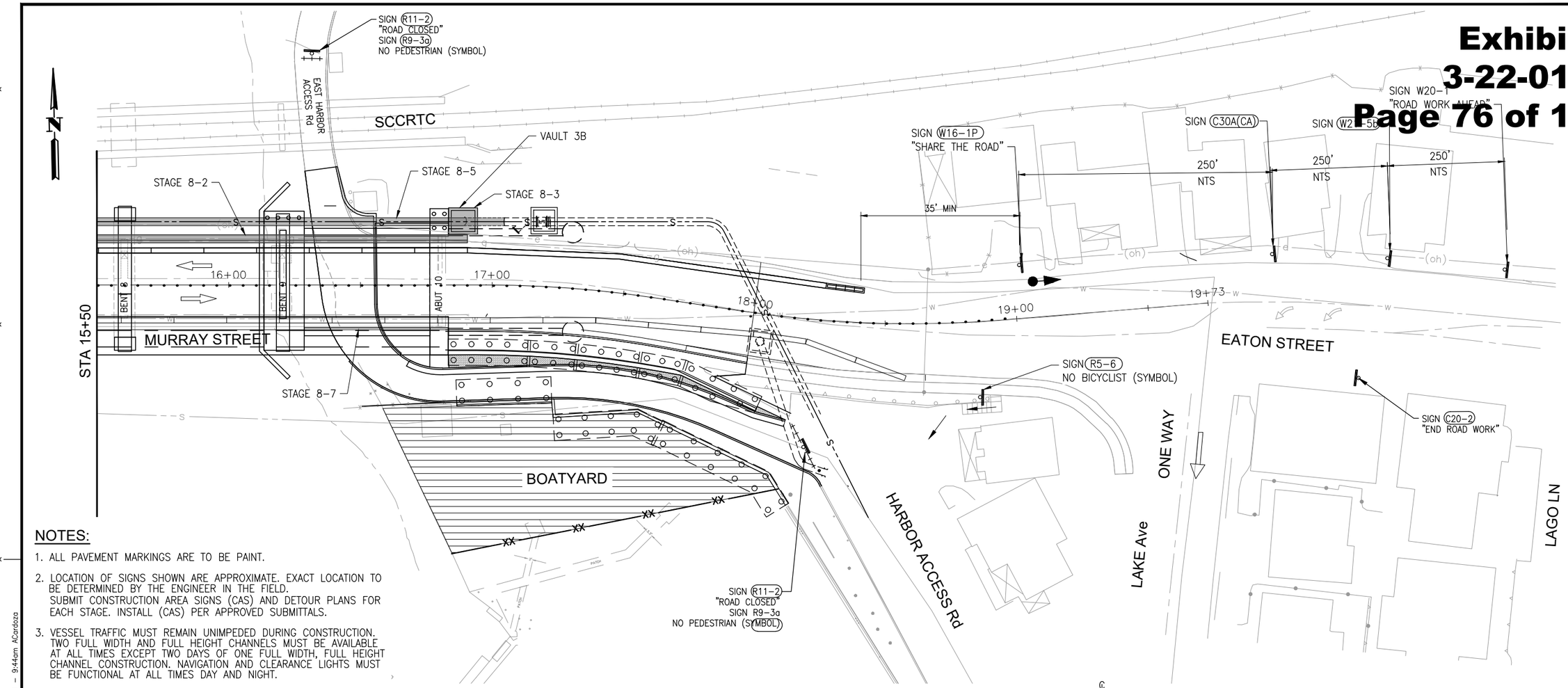

NOTES:

1. ALL PAVEMENT MARKINGS ARE TO BE PAINT.
2. LOCATION OF SIGNS SHOWN ARE APPROXIMATE. EXACT LOCATION TO BE DETERMINED BY THE ENGINEER IN THE FIELD. SUBMIT CONSTRUCTION AREA SIGNS (CAS) AND DETOUR PLANS FOR EACH STAGE. INSTALL (CAS) PER APPROVED SUBMITTALS.
3. VESSEL TRAFFIC MUST REMAIN UNIMPEDED DURING CONSTRUCTION. TWO FULL WIDTH AND FULL HEIGHT CHANNELS MUST BE AVAILABLE AT ALL TIMES EXCEPT TWO DAYS OF ONE FULL WIDTH, FULL HEIGHT CHANNEL CONSTRUCTION. NAVIGATION AND CLEARANCE LIGHTS MUST BE FUNCTIONAL AT ALL TIMES DAY AND NIGHT.
4. AERATION EQUIPMENT IN HARBOR ATTACHED TO BENT 7 OF BRIDGE MUST BE OPERABLE CONTINUOUSLY FROM APRIL THROUGH NOVEMBER, UNLESS EXTENDED/MODIFIED BY THE ENGINEER. ELECTRICAL SERVICE TO AERATION EQUIPMENT SHALL REMAIN AVAILABLE AT ALL TIMES.
5. TEMPORARY TRAFFIC SIGNAL NOT IN USE DURING THIS STAGE.

LEGEND:

- CONTRACTOR STAGING AREA
- TYPE III BARRICADE
- TEMPORARY RAILING (TYPE K)
- TEMPORARY SIGNAL
- PROTECTIVE PEDESTRIAN ENCLOSURE
- MASH TL-2 SLED END TREATMENT
- TEMPORARY SIGN SINGLE POST
- (RW-3) SIGN NUMBER
- DOCK REMOVAL (BY OTHERS)
- DOCK TO BE CONSTRUCTED/RECONSTRUCTED (BY OTHERS)
- PEDESTRIAN DIRECTION ARROWS
- STRUCTURE REMOVAL
- PLACE TEMP PAVEMENT MARKING (TAPE)
- DIRECTION OF TRAFFIC
- PORTABLE DELINEATORS AT 10' MAX SPACING
- ——XX—— TEMPORARY FENCE
- ——S—— SSFM TEMPORARY BYPASS

CONSTRUCTION AREA SIGNS

SIGN CODE	SIGN MESSAGE	QUANTITY
W20-1	"ROAD WORK AHEAD"	1
W16-1P	"SHARE THE ROAD"	1
R5-6	NO BICYCLIST (SYMBOL)	1
R11-2	"ROAD CLOSED"	2
R9-3a	NO PEDESTRIAN (SYMBOL)	2
C20-2	"END ROAD WORK"	1

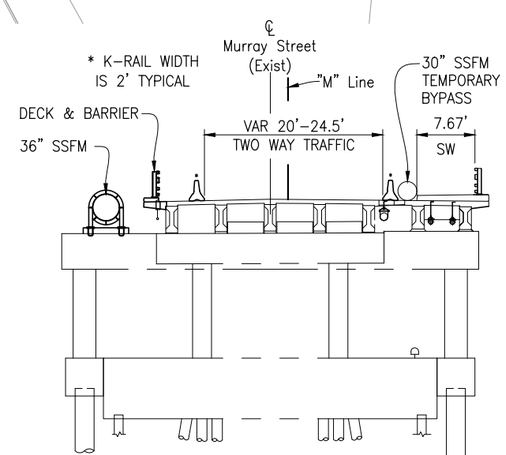

TYPICAL SECTION

	STAGE 8 – NORTH SIDE BRIDGE WORK
STAGE 8-1	MAINTAIN TWO-WAY TRAFFIC THROUGH CONSTRUCTION
STAGE 8-2	DEMO NORTH BRIDGE OVERHANG AND CONSTRUCT NEW OVERHANG, BARRIER, AND DECK DRAINAGE
STAGE 8-3	SET PRECAST VAULT-3A AND VAULT-3B
STAGE 8-4	SET PIPE TRUSS AND PIPE ANCHORAGES
STAGE 8-5	INSTALL FINAL 36" SSFM
STAGE 8-6	OPEN FINAL SSFM
STAGE 8-7	REMOVE SOUTH (PHASE 2) SSFM BYPASS LINE

THIS PLAN IS ACCURATE FOR STAGE CONSTRUCTION AND TRAFFIC HANDLING WORK ONLY.

100% SUBMITTAL NOT FOR CONSTRUCTION

NOTE:
THE CONTRACTOR SHALL VERIFY ALL CONTROLLING FIELD DIMENSIONS BEFORE ORDERING OR FABRICATING ANY MATERIAL

SCTH-23

REGISTERED PROFESSIONAL ENGINEER JUSTIN L. CONKLIN No. 61803 Exp. 6-30-23 CIVIL STATE OF CALIFORNIA

REGISTERED ENGINEER – CIVIL

TRC Engineers or its officers or agents shall not be responsible for the accuracy or completeness of electronic copies of this plan sheet

CITY OF SANTA CRUZ

PREPARED FOR THE CITY OF SANTA CRUZ PUBLIC WORKS DEPARTMENT

	BY	CHECKED
DESIGN	M. CHRISTENSEN	M. IMBRIANI
DETAILS	G. IMBSEN	M. IMBRIANI
QUANTITIES	A. BEDAL	J. CONKLIN

ORIGINAL SCALE IN INCHES FOR REDUCED PLANS 0 1 2 3

TRC
MARK IMBRIANI
PROJECT MANAGER

BRIDGE NO. 36C0108
CONTRACT NO.
EA NO.

MURRAY STREET BRIDGE SEISMIC RETROFIT AND BARRIER REPLACEMEN

STAGE CONSTRUCTION/TRAFFIC HANDLING PLAN STAGE 8

DISREGARD PRINTS BEARING EARLIER REVISION DATES

REVISION DATES (PRELIMINARY STAGE ONLY): 2/19/13 9/19/13 4/12/14 3/12/15 5/22/15 7/31/15 9/29/15 5/24/21 6/22/21

SCALE 1"=20'
SHEET 78 OF 167
VAULT NO. XXXXXXX

Drawing name: H:\1161 – Santa Cruz\Road\Sheets\031 – SC-TH01-XXX.dwg Layout Tab: Satge 8.2 Aug 27,2021 – 9:44am ACardoza

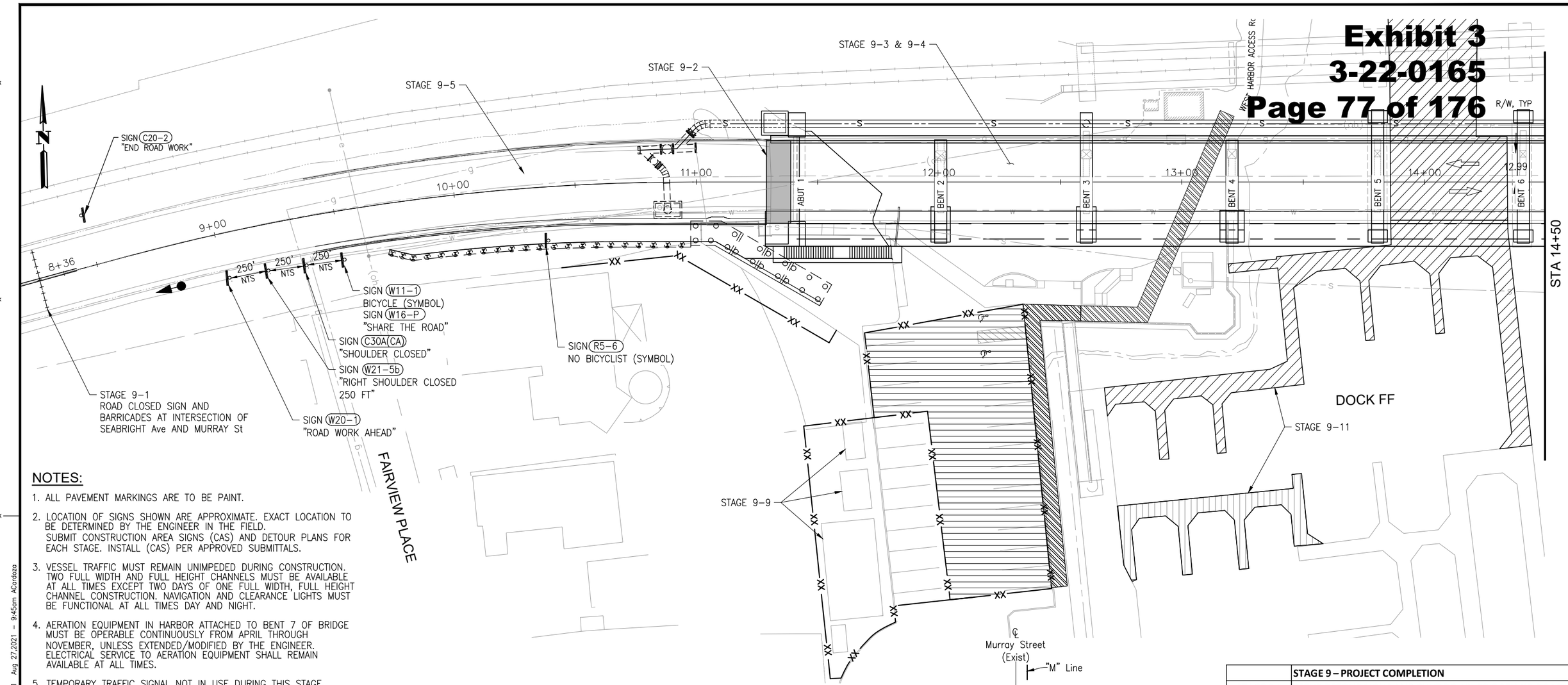

NOTES:

1. ALL PAVEMENT MARKINGS ARE TO BE PAINT.
2. LOCATION OF SIGNS SHOWN ARE APPROXIMATE. EXACT LOCATION TO BE DETERMINED BY THE ENGINEER IN THE FIELD. SUBMIT CONSTRUCTION AREA SIGNS (CAS) AND DETOUR PLANS FOR EACH STAGE. INSTALL (CAS) PER APPROVED SUBMITTALS.
3. VESSEL TRAFFIC MUST REMAIN UNIMPEDED DURING CONSTRUCTION. TWO FULL WIDTH AND FULL HEIGHT CHANNELS MUST BE AVAILABLE AT ALL TIMES EXCEPT TWO DAYS OF ONE FULL WIDTH, FULL HEIGHT CHANNEL CONSTRUCTION. NAVIGATION AND CLEARANCE LIGHTS MUST BE FUNCTIONAL AT ALL TIMES DAY AND NIGHT.
4. AERATION EQUIPMENT IN HARBOR ATTACHED TO BENT 7 OF BRIDGE MUST BE OPERABLE CONTINUOUSLY FROM APRIL THROUGH NOVEMBER, UNLESS EXTENDED/MODIFIED BY THE ENGINEER. ELECTRICAL SERVICE TO AERATION EQUIPMENT SHALL REMAIN AVAILABLE AT ALL TIMES.
5. TEMPORARY TRAFFIC SIGNAL NOT IN USE DURING THIS STAGE.

LEGEND:

- CONTRACTOR STAGING AREA
- TYPE III BARRICADE
- TEMPORARY RAILING (TYPE K)
- TEMPORARY SIGNAL
- PROTECTIVE PEDESTRIAN ENCLOSURE
- MASH TL-2 SLED END TREATMENT
- TEMPORARY SIGN SINGLE POST
- RW-3 SIGN NUMBER
- DOCK REMOVAL (BY OTHERS)
- DOCK TO BE CONSTRUCTED/RECONSTRUCTED (BY OTHERS)
- PEDESTRIAN DIRECTION ARROWS
- STRUCTURE REMOVAL
- PLACE TEMP PAVEMENT MARKING (TAPE)
- DIRECTION OF TRAFFIC
- PORTABLE DELINEATORS AT 10' MAX SPACING
- XX TEMPORARY FENCE
- S SSFM TEMPORARY BYPASS

CONSTRUCTION AREA SIGNS

SIGN CODE	SIGN MESSAGE	QUANTITY
W20-1	"ROAD WORK AHEAD"	1
R11-2	"ROAD CLOSED"	2
C20-2	"END ROAD WORK"	1

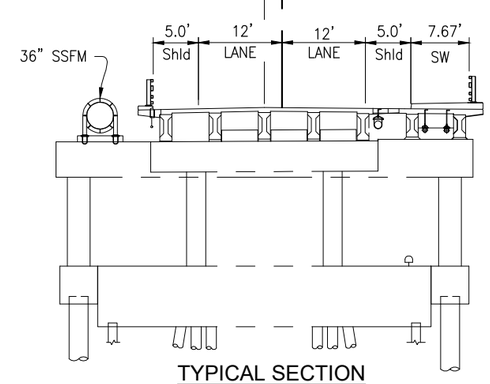

TYPICAL SECTION

	STAGE 9 – PROJECT COMPLETION
STAGE 9-1	SETUP DETOUR SIGNS AND SHUT DOWN BRIDGE AND ROADWAY
STAGE 9-2	CONSTRUCT STRUCTURE APPROACH SLABS
STAGE 9-3	PREPARE BRIDGE DECK
STAGE 9-4	PLACE POLYESTER CONCRETE OVERLAY & INSTALL JOINT SEALS
STAGE 9-5	RECONSTRUCT ROADWAY APPROACHES
STAGE 9-6	PLACE FINAL STRIPING
STAGE 9-7	REOPEN BRIDGE AND ROADWAY
STAGE 9-8	LANDSCAPING
STAGE 9-9	RELOCATE FACILITIES IN WEST HARBOR TO ORIGINAL LOCATIONS
STAGE 9-10	RESTORE WEST HARBOR TO ORIGINAL CONDITION
STAGE 9-11	RECONSTRUCT DOCK FF AND BY (BY OTHERS)

THIS PLAN IS ACCURATE FOR STAGE CONSTRUCTION AND TRAFFIC HANDLING WORK ONLY.

100% SUBMITTAL NOT FOR CONSTRUCTION

NOTE:
THE CONTRACTOR SHALL VERIFY ALL CONTROLLING FIELD DIMENSIONS BEFORE ORDERING OR FABRICATING ANY MATERIAL.

REGISTERED PROFESSIONAL ENGINEER JUSTIN L. CONKLIN No. 5[illegible] 30-23 CIVIL STATE OF CALIFORNIA — REGISTERED ENGINEER – CIVIL

TRC Engineers or its officers or agents shall not be responsible for the accuracy or completeness of electronic copies of this plan sheet

PREPARED FOR THE CITY OF SANTA CRUZ PUBLIC WORKS DEPARTMENT

	BY	CHECKED
DESIGN	M. CHRISTENSEN	M. IMBRIANI
DETAILS	G. IMBSEN	M. IMBRIANI
QUANTITIES	A. BEDAL	J. CONKLIN

ORIGINAL SCALE IN INCHES FOR REDUCED PLANS 0 1 2 3

TRC
MARK IMBRIANI
PROJECT MANAGER

BRIDGE NO. 36C0108
CONTRACT NO.
EA NO.

MURRAY STREET BRIDGE SEISMIC RETROFIT AND BARRIER REPLACEMEN
STAGE CONSTRUCTION/TRAFFIC HANDLING PLAN STAGE 9

DISREGARD PRINTS BEARING EARLIER REVISION DATES
REVISION DATES (PRELIMINARY STAGE ONLY): 2/18/13 9/18/13 4/17/14 5/12/15 5/22/15 7/24/15 9/29/15 5/24/21 6/22/21

SCALE 1"=20'
SHEET 79 OF 167
VAULT NO. XXXXXXX

Drawing name: H:\1161 – Santa Cruz\Road\Sheets\031– SC-TH01-XXX.dwg Layout Tab: Stage 9.1 Aug 27,2021 – 9:45am ACardoza

SCTH

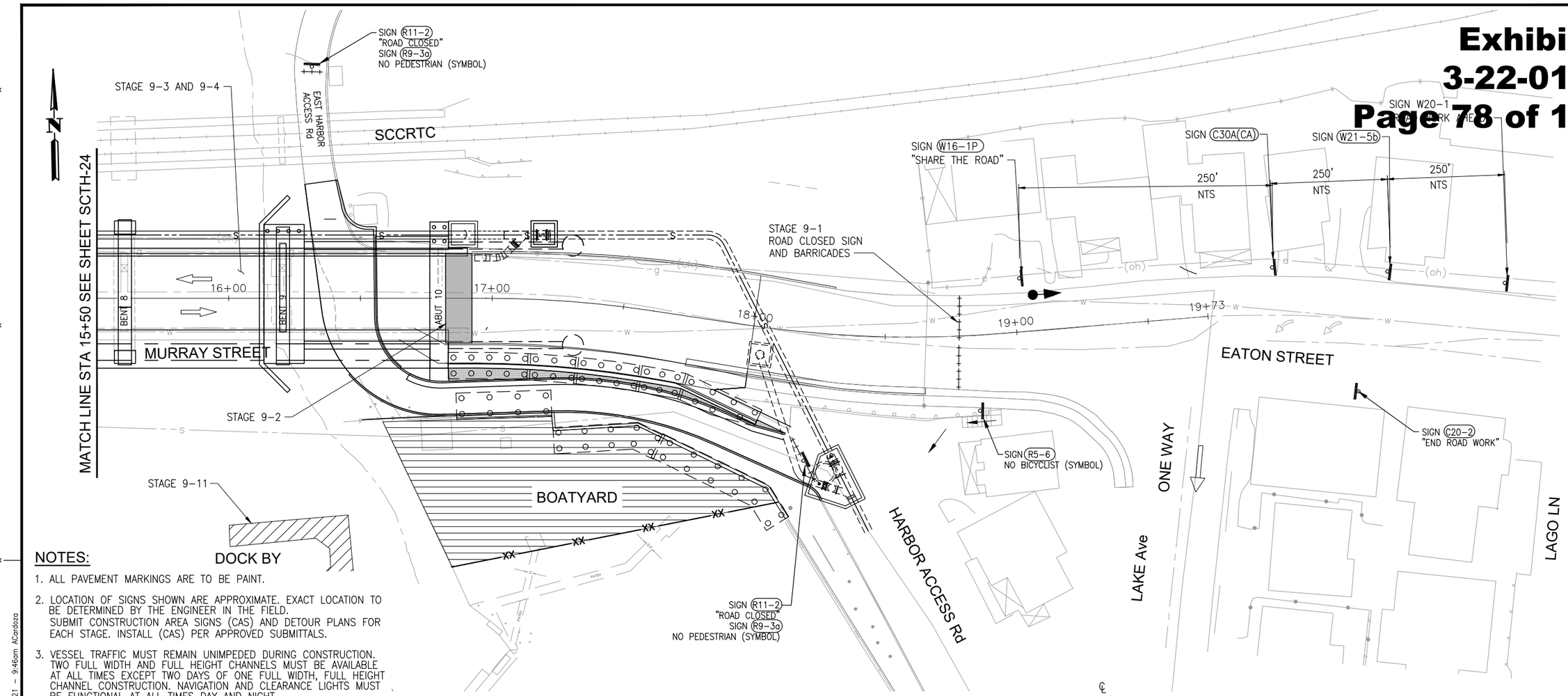

NOTES:

1. ALL PAVEMENT MARKINGS ARE TO BE PAINT.
2. LOCATION OF SIGNS SHOWN ARE APPROXIMATE. EXACT LOCATION TO BE DETERMINED BY THE ENGINEER IN THE FIELD. SUBMIT CONSTRUCTION AREA SIGNS (CAS) AND DETOUR PLANS FOR EACH STAGE. INSTALL (CAS) PER APPROVED SUBMITTALS.
3. VESSEL TRAFFIC MUST REMAIN UNIMPEDED DURING CONSTRUCTION. TWO FULL WIDTH AND FULL HEIGHT CHANNELS MUST BE AVAILABLE AT ALL TIMES EXCEPT TWO DAYS OF ONE FULL WIDTH, FULL HEIGHT CHANNEL CONSTRUCTION. NAVIGATION AND CLEARANCE LIGHTS MUST BE FUNCTIONAL AT ALL TIMES DAY AND NIGHT.
4. AERATION EQUIPMENT IN HARBOR ATTACHED TO BENT 7 OF BRIDGE MUST BE OPERABLE CONTINUOUSLY FROM APRIL THROUGH NOVEMBER, UNLESS EXTENDED/MODIFIED BY THE ENGINEER. ELECTRICAL SERVICE TO AERATION EQUIPMENT SHALL REMAIN AVAILABLE AT ALL TIMES.
5. TEMPORARY TRAFFIC SIGNAL NOT IN USE DURING THIS STAGE.

LEGEND:

- CONTRACTOR STAGING AREA
- TYPE III BARRICADE
- TEMPORARY RAILING (TYPE K)
- TEMPORARY SIGNAL
- PROTECTIVE PEDESTRIAN ENCLOSURE
- MASH TL-2 SLED END TREATMENT
- TEMPORARY SIGN SINGLE POST
- (RW-3) SIGN NUMBER
- DOCK REMOVAL (BY OTHERS)
- DOCK TO BE CONSTRUCTED/RECONSTRUCTED (BY OTHERS)
- PEDESTRIAN DIRECTION ARROWS
- STRUCTURE REMOVAL
- PLACE TEMP PAVEMENT MARKING (TAPE)
- DIRECTION OF TRAFFIC
- PORTABLE DELINEATORS AT 10' MAX SPACING
- ——XX—— TEMPORARY FENCE
- ——S—— SSFM TEMPORARY BYPASS

CONSTRUCTION AREA SIGNS

SIGN CODE	SIGN MESSAGE	QUANTITY
W20-1	"ROAD WORK AHEAD"	1
R11-2	"ROAD CLOSED"	2
C20-2	"END ROAD WORK"	1

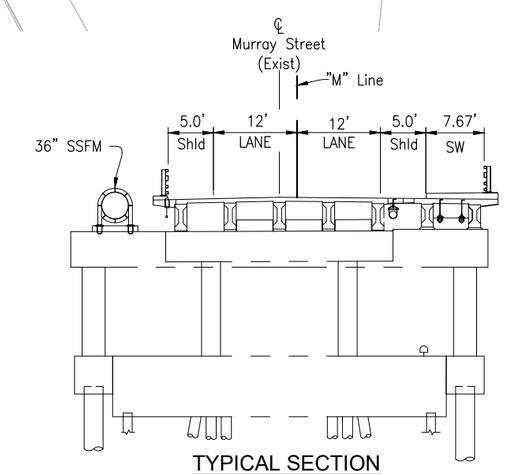

TYPICAL SECTION

	STAGE 9 – PROJECT COMPLETION
STAGE 9-1	SETUP DETOUR SIGNS AND SHUT DOWN BRIDGE AND ROADWAY
STAGE 9-2	CONSTRUCT STRUCTURE APPROACH SLABS
STAGE 9-3	PREPARE BRIDGE DECK
STAGE 9-4	PLACE POLYESTER CONCRETE OVERLAY & INSTALL JOINT SEALS
STAGE 9-5	RECONSTRUCT ROADWAY APPROACHES
STAGE 9-6	PLACE FINAL STRIPING
STAGE 9-7	REOPEN BRIDGE AND ROADWAY
STAGE 9-8	LANDSCAPING
STAGE 9-9	RELOCATE FACILITIES IN WEST HARBOR TO ORIGINAL LOCATIONS
STAGE 9-10	RESTORE WEST HARBOR TO ORIGINAL CONDITION
STAGE 9-11	RECONSTRUCT DOCK FF AND BY (BY OTHERS)

THIS PLAN IS ACCURATE FOR STAGE CONSTRUCTION AND TRAFFIC HANDLING WORK ONLY.

100% SUBMITTAL NOT FOR CONSTRUCTION

NOTE:
THE CONTRACTOR SHALL VERIFY ALL CONTROLLING FIELD DIMENSIONS BEFORE ORDERING OR FABRICATING ANY MATERIALS

SCTH-25

REGISTERED PROFESSIONAL ENGINEER — JUSTIN L. CONKLIN — No. 81108 — EXP. 6-30-23 — CIVIL — STATE OF CALIFORNIA
REGISTERED ENGINEER – CIVIL
TRC Engineers or its officers or agents shall not be responsible for the accuracy or completeness of electronic copies of this plan sheet

PREPARED FOR THE CITY OF SANTA CRUZ PUBLIC WORKS DEPARTMENT

	BY	CHECKED
DESIGN	M. CHRISTENSEN	M. IMBRIANI
DETAILS	G. IMBSEN	M. IMBRIANI
QUANTITIES	A. BEDAL	J. CONKLIN

ORIGINAL SCALE IN INCHES FOR REDUCED PLANS 0 1 2 3

TRC
MARK IMBRIANI
PROJECT MANAGER

BRIDGE NO. 36C0108
CONTRACT NO.
EA NO.

MURRAY STREET BRIDGE SEISMIC RETROFIT AND BARRIER REPLACEMEN

STAGE CONSTRUCTION/TRAFFIC HANDLING PLAN STAGE 9

DISREGARD PRINTS BEARING EARLIER REVISION DATES
REVISION DATES (PRELIMINARY STAGE ONLY): 2/14/13 9/18/13 4/19/14 5/19/15 5/22/15 7/31/15 9/29/15 5/24/21 6/22/21

SCALE 1"=20'
SHEET 80 OF 167
VAULT NO. XXXXXXX

Drawing name: H:\1161 – Santa Cruz\Road\Sheets\031– SC-TH01-XXX.dwg Layout Tab: Stage 9.2 Aug 27,2021 – 9:46am ACardoza

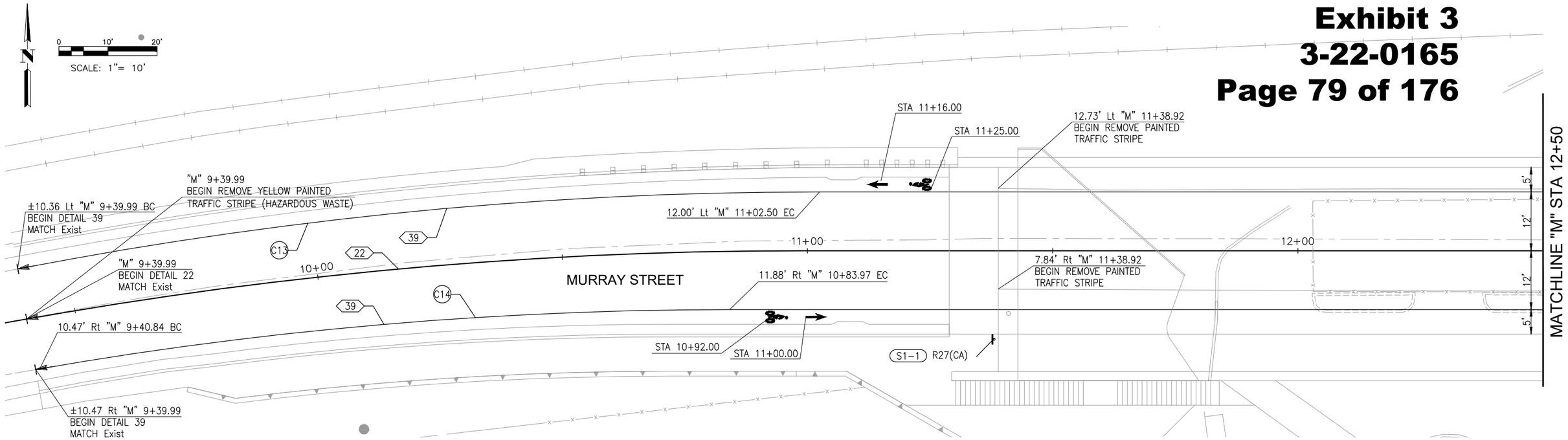

WEST APPROACH

LEGEND:

- BIKE LANE SYMBOL WITH PERSON PER CALTRANS Std PLAN A24C
- LIMIT LINE (STOP LINE) PER CALTRANS Std PLAN A24E
- STOP PER CALTRANS Std PLAN A24D
- BIKE LANE ARROW PER CALTRANS Std PLAN A24A
- NO. TRAFFIC STRIPE DETAIL NUMBER
- BEGIN/END OF TRAFFIC STRIPE DETAIL
- ROADSIDE SIGN NUMBER
- S1-1 ROADSIDE SIGN NUMBER
- RESET ROADSIDE SIGN
- RELOCATE ROADSIDE SIGN
- BIKE PER CALTRANS Std PLAN A24E

NOTES:

1. FOR ACCURATE RIGHT OF WAY DATA, CONTACT RIGHT OF WAY ENGINEERING AT THE DISTRICT OFFICE.
2. ALL PAINTED STALL LINES AND PAVEMENT MARKINGS TO BE 2-COAT.
3. FEDERAL SIGN CODES ARE SHOWN UNLESS DESIGNATED BY (CA) WHICH INDICATES A CALIFORNIA SIGN CODE.
4. FINAL SIGN PLACEMENT WILL BE AT THE DIRECTION OF THE ENGINEER.
5. PAINTED STALL TO BE 4" WIDE WHITE.
6. CROSS HATCH TO BE 4" WIDE WHITE AT 2' OC.
7. INTERNATIONAL SYMBOL OF ACCESSIBILITY (ISA) PAVEMENT MARKING PER CALTRANS STANDARD PLAN A24C.
8. ALL EXISTING SIGNS IN CONFLICT WITH THE PROPOSED CONSTRUCTION SHALL BE REMOVED AND SALVAGED TO THE CITY WHETHER OR NOT CALLED OUT ON THE PLAN.
9. SEE SIGN QUANTITY TABLE SHEET PDQ-1 FOR SIGN DETAILS.
10. SANTA CRUZ CITY LIMIT SIGN TO PROTECT IN PLACE.

CURVE DATA

CURVE	R	Δ	T	L
C13	858.00'	10°59'07"	82.51'	164.51'
C14	825.00'	09°52'38"	71.29'	142.22'

APPROVED FOR PAVEMENT DELINEATION AND SIGN WORK ONLY

100% SUBMITTAL
NOT FOR CONSTRUCTION

NOTE:
THE CONTRACTOR SHALL VERIFY ALL CONTROLLING FIELD DIMENSIONS BEFORE ORDERING OR FABRICATING ANY MATERIAL.

PD-1

REGISTERED PROFESSIONAL ENGINEER JUSTIN L. CONKLIN No. 5[illegible]-23 CIVIL STATE OF CALIFORNIA
REGISTERED ENGINEER – CIVIL
TRC Engineers or its officers or agents shall not be responsible for the accuracy or completeness of electronic copies of this plan sheet

CITY OF SANTA CRUZ
PREPARED FOR THE
CITY OF SANTA CRUZ
PUBLIC WORKS DEPARTMENT

DESIGN	BY A. BEDAL	CHECKED J. CONKLIN
DETAILS	BY D. LOR	CHECKED J. CONKLIN
QUANTITIES	BY	CHECKED

ORIGINAL SCALE IN INCHES FOR REDUCED PLANS 0 1 2 3

TRC
MARK IMBRIANI
PROJECT MANAGER

BRIDGE NO. 36C0108
CONTRACT NO.
EA NO.

MURRAY STREET BRIDGE
SEISMIC RETROFIT AND BARRIER REPLACEMEN
PAVEMENT DELINEATION AND SIGN PLAN

DISREGARD PRINTS BEARING EARLIER REVISION DATES
REVISION DATES (PRELIMINARY STAGE ONLY)

SCALE 1"=10'
SHEET 81 OF 167
VAULT NO. XXXXXXX

Drawing name: H:\1161 – Santa Cruz\Road\Sheets\048-PD01.dwg Layout Tab: PD-1 Aug 26,2021 – 4:49pm MBeem

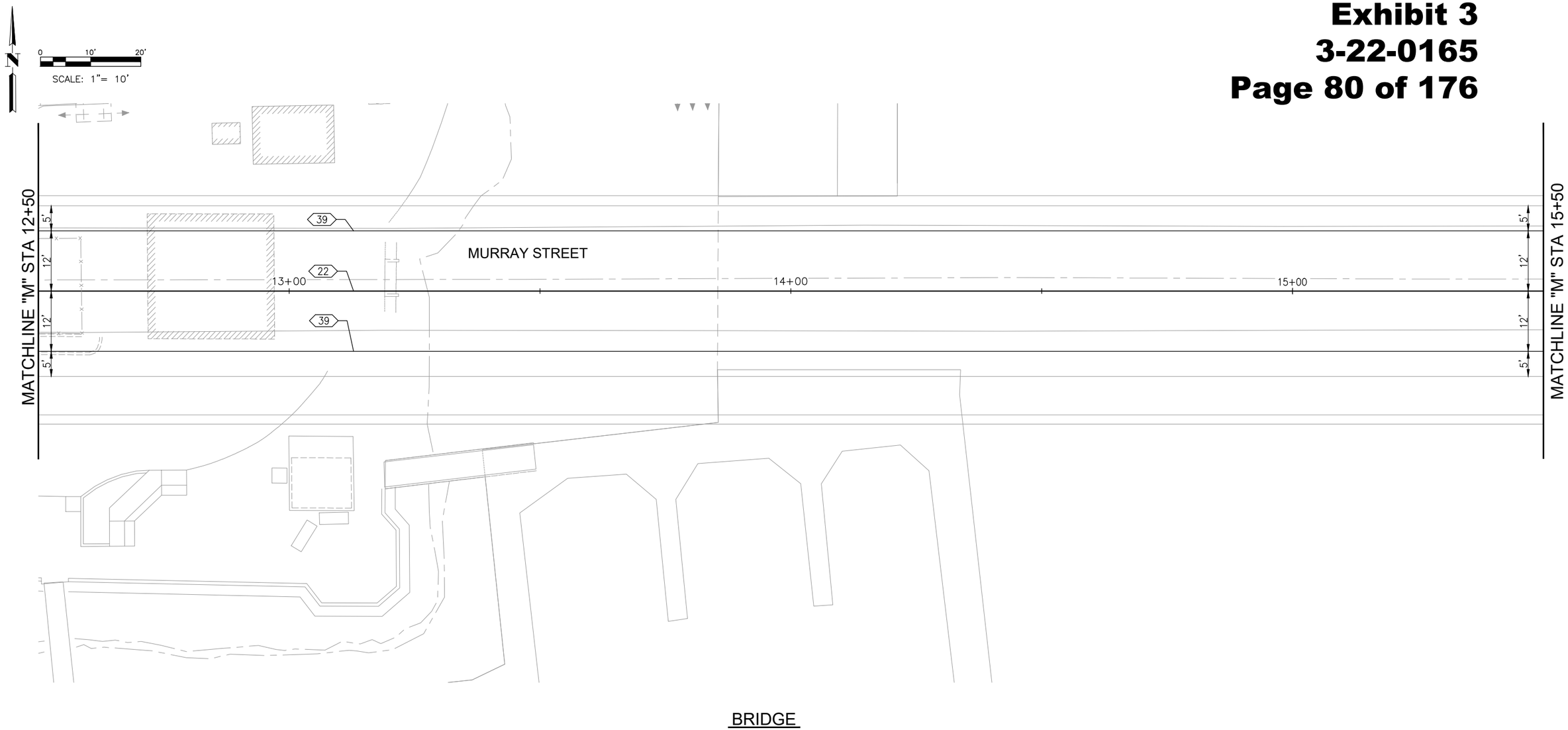

APPROVED FOR PAVEMENT DELINEATION AND SIGN WORK ONLY

100% SUBMITTAL
NOT FOR CONSTRUCTION

NOTE:
THE CONTRACTOR SHALL VERIFY ALL CONTROLLING FIELD DIMENSIONS BEFORE ORDERING OR FABRICATING ANY MATERIAL.

PD-2

REGISTERED PROFESSIONAL ENGINEER
JUSTIN L. CONKLIN
No. 5[illegible]
[illegible]-30-23
CIVIL
STATE OF CALIFORNIA

REGISTERED ENGINEER – CIVIL

TRC Engineers or its officers or agents shall not be responsible for the accuracy or completeness of electronic copies of this plan sheet

CITY OF SANTA CRUZ

PREPARED FOR THE
CITY OF SANTA CRUZ
PUBLIC WORKS DEPARTMENT

DESIGN	BY A. BEDAL	CHECKED J. CONKLIN
DETAILS	BY D. LOR	CHECKED J. CONKLIN
QUANTITIES	BY	CHECKED

ORIGINAL SCALE IN INCHES FOR REDUCED PLANS 0 1 2 3

TRC
MARK IMBRIANI
PROJECT MANAGER

BRIDGE NO. 36C0108
CONTRACT NO.
EA NO.

MURRAY STREET BRIDGE
SEISMIC RETROFIT AND BARRIER REPLACEMEN
PAVEMENT DELINEATION AND SIGN PLAN

DISREGARD PRINTS BEARING EARLIER REVISION DATES
REVISION DATES (PRELIMINARY STAGE ONLY)

SCALE 1"=10'
SHEET 82 OF 167
VAULT NO. XXXXXXX

Drawing name: H:\1161 – Santa Cruz\Road\Sheets\048-PD01.dwg Layout Tab: PD-2 Aug 26,2021 – 4:50pm MBeem

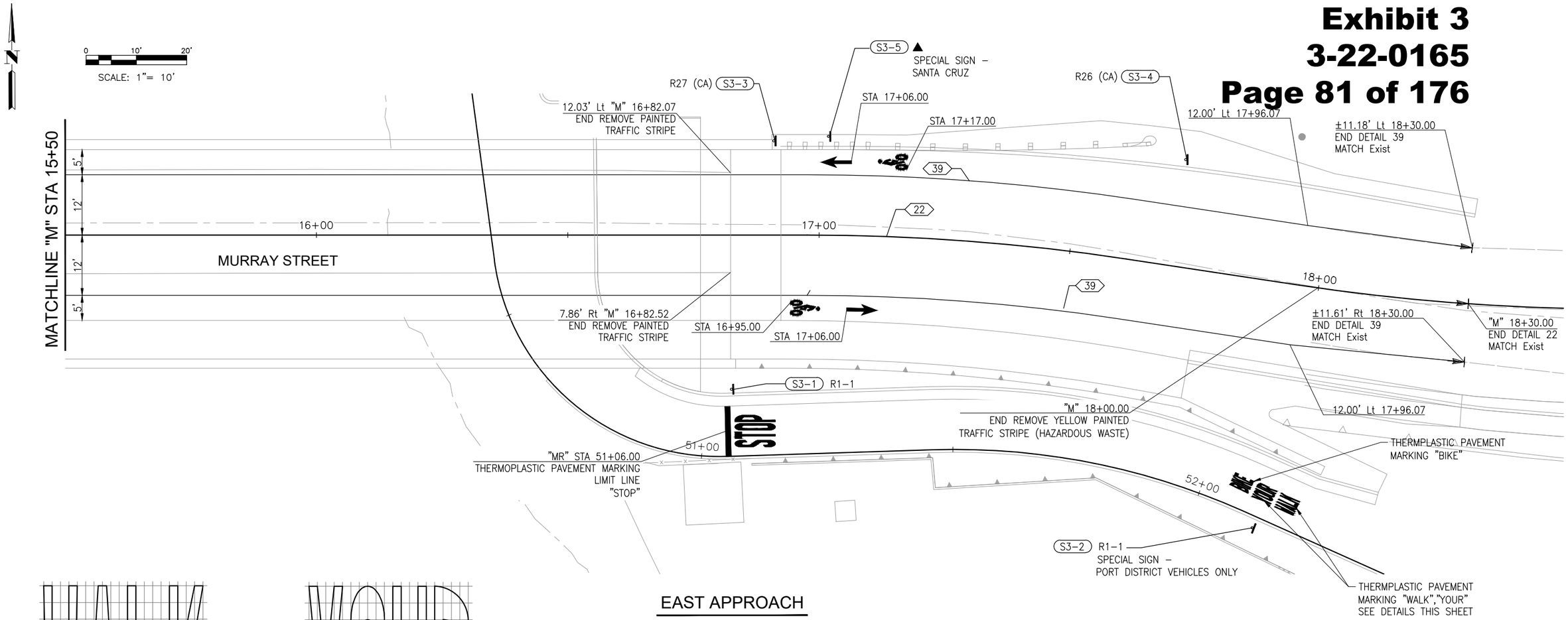

EAST APPROACH

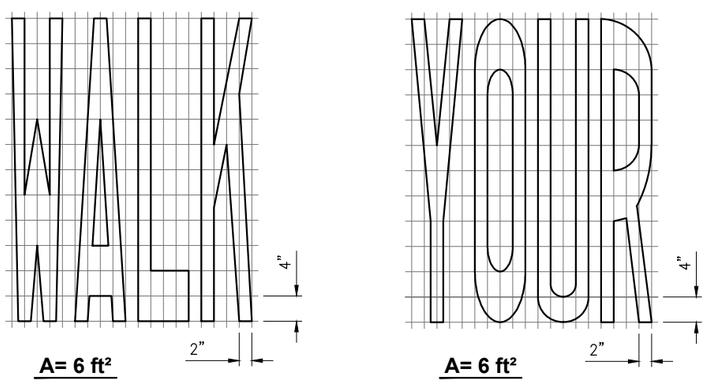

A= 6 ft²

A= 6 ft²

PAVEMENT MARKINGS WORDS DETAIL

NO SCALE

APPROVED FOR PAVEMENT DELINEATION AND SIGN WORK ONLY

100% SUBMITTAL
NOT FOR CONSTRUCTION

NOTE:
THE CONTRACTOR SHALL VERIFY ALL CONTROLLING FIELD DIMENSIONS BEFORE ORDERING OR FABRICATING ANY MATERIAL.

PD-3

REGISTERED PROFESSIONAL ENGINEER JUSTIN L. CONKLIN No. 36-30-23 CIVIL STATE OF CALIFORNIA

REGISTERED ENGINEER – CIVIL

TRC Engineers or its officers or agents shall not be responsible for the accuracy or completeness of electronic copies of this plan sheet

CITY OF SANTA CRUZ

PREPARED FOR THE
CITY OF SANTA CRUZ
PUBLIC WORKS DEPARTMENT

DESIGN	BY A. BEDAL	CHECKED J. CONKLIN
DETAILS	BY D. LOR	CHECKED J. CONKLIN
QUANTITIES	BY	CHECKED

ORIGINAL SCALE IN INCHES FOR REDUCED PLANS 0 1 2 3

TRC
MARK IMBRIANI
PROJECT MANAGER

BRIDGE NO. 36C0108
CONTRACT NO.
EA NO.

MURRAY STREET BRIDGE
SEISMIC RETROFIT AND BARRIER REPLACEMEN
PAVEMENT DELINEATION AND SIGN PLAN

DISREGARD PRINTS BEARING EARLIER REVISION DATES

REVISION DATES (PRELIMINARY STAGE ONLY)

SCALE 1"=10'
SHEET 83 OF 167
VAULT NO. XXXXXXX

Drawing name: H:\1161 – Santa Cruz\Road\Sheets\048-PD01.dwg Layout Tab: PD-3 Aug 27,2021 – 11:18am MBeem

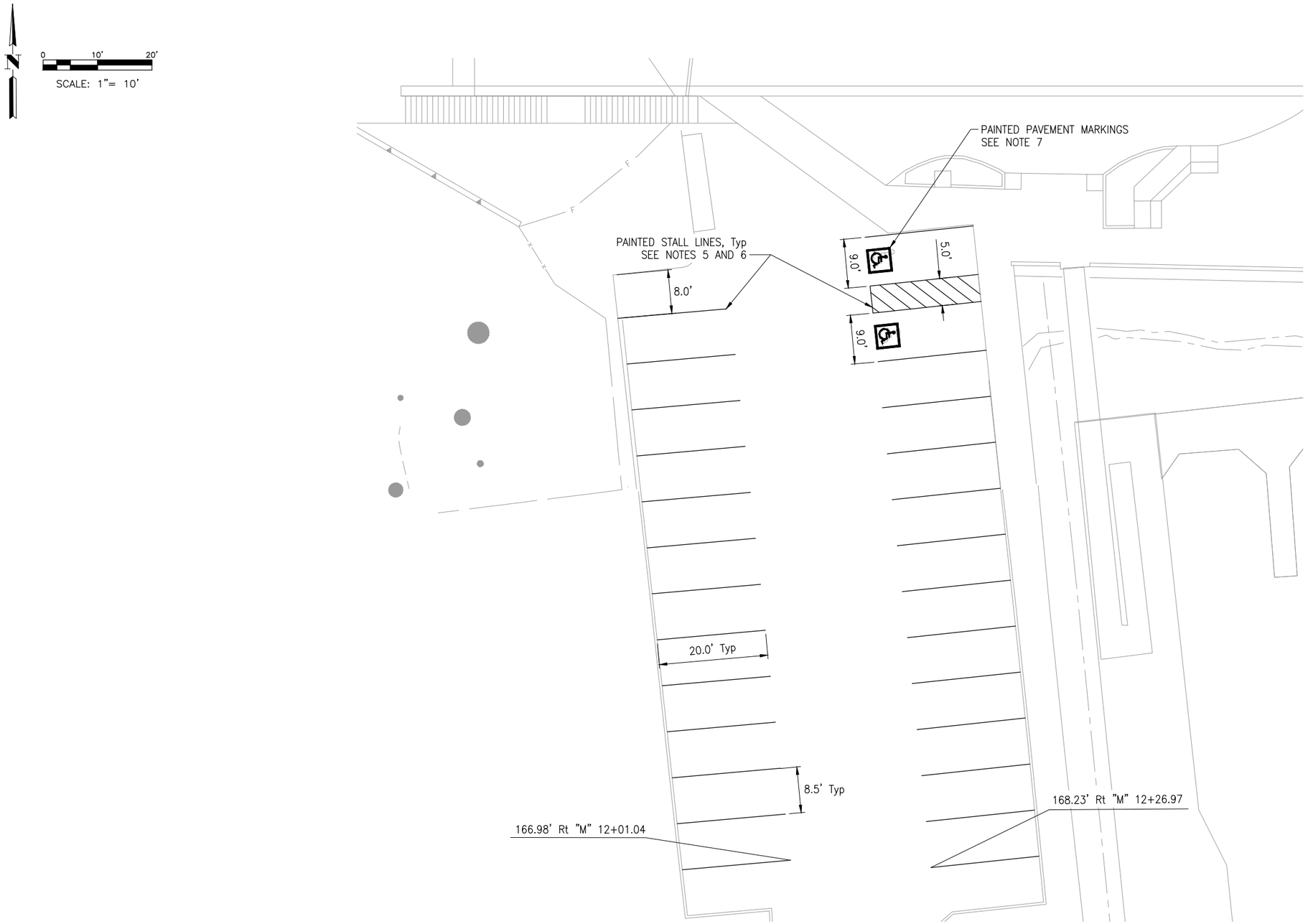

WEST HARBOR PARKING

100% SUBMITTAL
NOT FOR CONSTRUCTION

NOTE:
THE CONTRACTOR SHALL VERIFY ALL CONTROLLING FIELD DIMENSIONS BEFORE ORDERING OR FABRICATING ANY MATERIAL.

PD-4

APPROVED FOR PAVEMENT DELINEATION AND SIGN WORK ONLY

REGISTERED PROFESSIONAL ENGINEER
JUSTIN L. CONKLIN
No. [illegible]-30-23
CIVIL
STATE OF CALIFORNIA

REGISTERED ENGINEER – CIVIL

TRC Engineers or its officers or agents shall not be responsible for the accuracy or completeness of electronic copies of this plan sheet

CITY OF SANTA CRUZ

PREPARED FOR THE
CITY OF SANTA CRUZ
PUBLIC WORKS DEPARTMENT

DESIGN	BY A. BEDAL	CHECKED J. CONKLIN	
DETAILS	BY D. LOR	CHECKED J. CONKLIN	
QUANTITIES	BY	CHECKED	
ORIGINAL SCALE IN INCHES FOR REDUCED PLANS	0 1 2 3		

TRC
MARK IMBRIANI
PROJECT MANAGER

BRIDGE NO. 36C0108
CONTRACT NO.
EA NO.

MURRAY STREET BRIDGE
SEISMIC RETROFIT AND BARRIER REPLACEMEN
PAVEMENT DELINEATION AND SIGN PLAN

DISREGARD PRINTS BEARING EARLIER REVISION DATES
REVISION DATES (PRELIMINARY STAGE ONLY)

SCALE 1"=10'
SHEET 84 OF 167
VAULT NO. XXXXXXX

Drawing name: H:\1161 – Santa Cruz\Road\Sheets\048-PD01.dwg Layout Tab: PD-4 Aug 26,2021 – 4:59pm MBeem

SIGN QUANTITIES

SHEET No.	SIGN NUMBER	SIGN CODE FEDERAL	SIGN CODE CALIFORNIA	SIGN PANEL SIZE L X D INCHES	PANEL AREA SQFT	BACKGROUND COLOR	BACKGROUND RETROREFLECTIVITY ASTM TYPE	LEGEND COLOR	LEGEND RETROREFLECTIVITY ASTM TYPE	SIGN TYPE ONE POST (EACH)	SIGN TYPE TWO POST (EACH)	POST SIZE & NUMBER WOOD 4" x 4"	POST SIZE & NUMBER WOOD 4" x 6"	POST SIZE & NUMBER WOOD 6" x 6"	RESET ROADSIDE SIGN EACH	FURNISH SINGLE SHEET ALUMINUM SIGN (0.063"-UNFRAMED) SQFT	COMMENT
PD-1	1		R27 (CA)	12 x 18	1.5	WHITE	II	RED	II	1			1			1.5	
PD-3	1	R1-1		30 x 30	5.18	RED	III	WHITE	II	1			1			5.18	
	2	R1-1		30 x 30	5.18	RED	III	WHITE	II	1			1			5.18	
		SEE COMMENT															RELOCATE SIGN PANEL - PORT DISTRICT VEHICLES ONLY
	3		R27 (CA)	12 x 18	1.5	WHITE	II	RED	II	1			1			1.5	
	4		R26 (CA)	12 x 18	1.5	WHITE	II	RED	II	1			1			1.5	
	5														1		DECORATIVE SANTA CRUZ SIGN
									TOTAL	5	0	0	5	0	1	14.86	

PAVEMENT DELINEATION QUANTITIES

SHEET No.	LOCATION/STATION	6" THERMOPLASTIC TRAFFIC STRIPE LF	THERMOPLASTIC PAVEMENT MARKING SQFT	PAVEMENT MARKER (RETROREFLECTIVE) EA	PAINTED STALL LINES AND PAVEMENT MARKINGS SQFT	DESCRIPTION
PD-1 TO PD-3	"M" 9+39.99 TO 18+30.00	1780				ON CENTERLINE
PD-1 TO PD-3	"M" - Lt 9+39.99 TO 18+30.00	892				ALL TRAFFIC STRIPE DETAILS INCLUDED
PD-1 TO PD-3	"M" - Rt 9+39.99 TO 18+30.00	888				ALL TRAFFIC STRIPE DETAILS INCLUDED
PD-1	MURRAY STREET		21			ALL MARKINGS AND SYMBOLS INCLUDED
PD-3	MURRAY STREET		70			ALL MARKINGS AND SYMBOLS INCLUDED
PD-1 TO PD-3	MURRAY STREET			77		ON CENTERLINE
PD-4	WEST HARBOR PARKING LOT				252	ALL MARKINGS, STRIPES, AND SYMBOLS INCLUDED
	TOTAL	3560	91	77	252	

REMOVE TRAFFIC STRIPE

SHEET No.	LOCATION/STATION	PAINTED LF	YELLOW PAINTED LF
PD-1 TO PD-3	MURRAY STREET	1086	891
	TOTAL	1086	891

100% SUBMITTAL
NOT FOR CONSTRUCTION

NOTE:
THE CONTRACTOR SHALL VERIFY ALL CONTROLLING FIELD DIMENSIONS BEFORE ORDERING OR FABRICATING ANY MATERIAL.

PDQ-1

REGISTERED ENGINEER – CIVIL

TRC Engineers or its officers or agents shall not be responsible for the accuracy or completeness of electronic copies of this plan sheet

PREPARED FOR THE
CITY OF SANTA CRUZ
PUBLIC WORKS DEPARTMENT

	BY	CHECKED
DESIGN	A. BEDAL	J. CONKLIN
DETAILS	A. BEDAL	J. CONKLIN
QUANTITIES	A. BEDAL	J. CONKLIN

ORIGINAL SCALE IN INCHES FOR REDUCED PLANS 0 1 2 3

TRC
MARK IMBRIANI
PROJECT MANAGER

BRIDGE NO. 36C0108
CONTRACT NO.
EA NO.

MURRAY STREET BRIDGE
SEISMIC RETROFIT AND BARRIER REPLACEMEN
PAVEMENT DELINEATION & SIGN QUANTITIES

DISREGARD PRINTS BEARING EARLIER REVISION DATES
REVISION DATES (PRELIMINARY STAGE ONLY)

SCALE NTS
SHEET 85 OF 167
VAULT NO. XXXXXXX

Drawing name: H:\1161 – Santa Cruz\Road\Sheets\053-PDQ.dwg Layout Tab: PDQ-1 Sep 21,2021 – 12:28pm DLor

PAVEMENT STRUCTURE

SHEET No.	LINE DESIGNATION	STATION/LOCATION	HOT MIX ASPHALT (TYPE A)	CLASS 2 AGGREGATE BASE	COLD PLANE ASPHALT CONCRETE PAVEMENT
			TON	CY	SQYD
PP-1	"M"	9+39.99 TO 11+28.92	205.0		
PP-2	"M"	16+92.41 TO 18+30.00	184.7		
PP-3	"MR"	49+90.00 TO 52+56.00	131.5	83.1	
PP-1	"M"	9+39.99 TO 11+38.92		148.7	
PP-2	"M"	16+82.41 TO 18+30.00		116.7	
C-1	"M"	11+82.25	2.3		
C-2	"M"	17+97.57	2.9		
C-4	"M"	EAST HARBOR	166.0		560.5
C-4	"M"	WEST HARBOR	65.4		1423.0
		TOTAL	757.9	348.4	1983.5

IRRIGATION CONDUIT

SHEET No.	LOCATION		SIDE		4" WELDED STEEL PIPE CONDUIT
			Lt	Rt	LF
PP-3	"MR"	50+85.00	X	X	24.5
PP-3	"MR"	51+45.00	X	X	16
				TOTAL	40

X - DENOTES REQUIREMENT

TEMPORARY WATER POLLUTION CONTROL

SHEET No.	TEMPORARY DRAINAGE INLET PROTECTION	TEMPORARY CONSTRUCTION ENTRANCE	TEMPORARY CONCRETE WASHOUT	TEMPORARY FIBER ROLL	TEMPORARY SOIL BINDER
	EA	EA	LS	LF	SQYD
WPC-1	11	1	1	280	464
WPC-2	9	1		907.6	617
TOTAL	20	2	1	1188	1081

MINOR CONCRETE

SHEET No.	LOCATION	STATION	MINOR CONCRETE (CURB AND GUTTER, CITY STANDARD)	MINOR CONCRETE (CURB,GUTTER, AND SIDEWALK, CITY STANDARD)	MINOR CONCRETE (CURB AND GUTTER) TYPE A2-8	MINOR CONCRETE (CURB, CITY STANDARD)	MINOR CONCRETE (EXPOSED AGGREGATE CONCRETE)	MINOR CONCRETE (STAIRS)	MINOR CONCRETE (CONCRETE APRON)
			CY	CY	CY	CY	SQFT	CY	CY
PP-1	"M" - Lt	9+39.99 TO 11+28.92	10.7						
PP-3	"MR" - Lt	50+80.00 TO 52+32.59	8.5						
PP-1	"M" - Rt	9+39.99 TO 11+28.92		26.6					
PP-2	"M" - Rt	17+98.77 TO 18+65.00		7.8					
PP-2	"M" - Rt	16+92.41 to 17+98.77			6.6				
PP-1	"M" - Lt	11+28.92 TO 11+30.67				0.04			
PP-3	"MR"	50+65.00 TO 52+56.00				4.5			
PP-3	"MR" - Lt	50+07.06 TO 50+80.00				2.0			
C-4	"M" - Rt	11+82.09 TO 11+82.53				0.8			
C-1	"M" - Rt	11+82.25 TO 11+81.04				0.1			
C-1	"M" - Rt	11+82.25 TO 11+83.62				0.3			
C-1	"M" - Rt	11+83.96 TO 11+91.20					23.5		
C-4	"M" - Rt	13+12.39					124.4		
C-1	"M" - Rt	11+29.42 TO 11+83.97						8.6	
C-1	"M" - Rt	11+75.00							1.7
		TOTAL	19.2	34.4	6.6	7.8	147.9	8.6	1.7

FENCE

SHEET No.	LINE DESIGNATION	STATION	LOCATION	WIRE MESH FENCE (Mod)	CHAIN LINK FENCE (TYPE CL-4)	CHAIN LINK FENCE (TYPE CL-6, SLATTED)	RECONSTRUCT FENCE
				LF	LF	LF	LF
C-3	"M"	11+51.05 TO 11+57.70	Rt	13			
C-3	"MR"	50+78.21 TO 51+09.94	Rt		36		
C-3	"M"	12+03.05	Lt			149	
C-3	"M"	10+42.45 TO 11+11.70	Rt			68	
C-3	"M"	11+51.21 TO 11+70.02	Rt				100
			TOTAL	13	36	216	100

TEMPORARY FENCE

SHEET No.	TEMPORARY FENCE	TEMPORARY FENCE (TYPE CL-6, PRIVACY)	TEMPORARY HIGH-VISIBILITY FENCE
	LF	LF	LF
DEM-1			25
DEM-2			25
C-3		126	
C-3	851		
TOTAL	851	126	50

ROADWAY EXCAVATION

SHEET No.	LINE DESIGNATION	STATION	EXCAVATION	EMBANKMENT (N)
			CY	CY
CD-1	"M"	9+39.99 TO 11+38.92	302.2	168.8
CD-2	"M"	9+39.99 TO 11+38.92	211.51	169.5
CD-2	"MR"	49+90.00 TO 52+56.00	294.19	61.1
		TOTAL	807.9	399.4

GUARDRAIL

SHEET No.	LINE DESIGNATION	STATION	LOCATION	TRANSITION RAILING (TYPE WB-31)	TERMINAL SYSTEM (TYPE SKT)	TERMINAL SYSTEM (TYPE FLEAT)
				EA	EA	EA
PP-1	"M"	11+05.76	Lt	1		
PP-2	"M"	17+14.89	Lt	1		
PP-1	"M"	10+54.89	Lt		1	
PP-2	"M"	17+57.56	Lt			1
			TOTAL	2	1	1

TRENCH EXCAVATION

SHEET No.	LINE DESIGNATION	STATION	EXCAVATION
			CY
U-1	"M"	9+29.87 TO 11+25.16	42
U-2	"M"	16+86.50 TO 18+62.66	46
		TOTAL	87

PLACE HOT MIX ASPHALT

SHEET No.	LOCATION	STATION	DIKE (TYPE C)	DIKE (TYPE F)	MISCELLANEOUS AREAS	HOT MIX ASPHALT (TYPE A) *
			LF	LF	SQYD	TON
PP-2	"M" - Lt	17+19.69 TO 18+30.00	112.0			0.89
PP-2	"M" - Lt	16+90.66 TO 17+19.69		31.0		0.42
C-1	"M" - Rt	11+85.00			6.3	2.3
C-2	"MR" - Lt	52+25.00			8.3	2.9
		TOTAL	112.0	31.0	14.7	6.5

* QUANTITY INCLUDED IN PAVEMENT STRUCTURE QUANTITIES SUMMARY.

(N) = NOT A SEPARATE PAY ITEM, FOR INFORMATION ONLY

100% SUBMITTAL NOT FOR CONSTRUCTION

NOTE:
THE CONTRACTOR SHALL VERIFY ALL CONTROLLING FIELD DIMENSIONS BEFORE ORDERING OR FABRICATING ANY MATERIAL.

Q-1

REGISTERED PROFESSIONAL ENGINEER JUSTIN L. CONKLIN No. 81198 Exp. 30-23 CIVIL STATE OF CALIFORNIA
REGISTERED ENGINEER – CIVIL
TRC Engineers or its officers or agents shall not be responsible for the accuracy or completeness of electronic copies of this plan sheet

CITY OF SANTA CRUZ

PREPARED FOR THE
CITY OF SANTA CRUZ
PUBLIC WORKS DEPARTMENT

DESIGN	BY A. BEDAL	CHECKED J. CONKLIN	
DETAILS	BY D. LOR	CHECKED J. CONKLIN	
QUANTITIES	BY D. LOR	CHECKED J. CONKLIN	

ORIGINAL SCALE IN INCHES FOR REDUCED PLANS 0 1 2 3

TRC
MARK IMBRIANI
PROJECT MANAGER

BRIDGE NO. 36C0108
CONTRACT NO.
EA NO.

MURRAY STREET BRIDGE
SEISMIC RETROFIT AND BARRIER REPLACEMEN
SUMMARY OF QUANTITIES

DISREGARD PRINTS BEARING EARLIER REVISION DATES
REVISION DATES (PRELIMINARY STAGE ONLY)

SCALE NTS
SHEET 86 OF 167
VAULT NO. XXXXXXX

Drawing name: H:\1161 – Santa Cruz\Road\Sheets\054-Quantities.dwg Layout Tab: Q-1 Sep 21,2021 – 1:02pm DLor

REMOVE FENCE

SHEET No.	LINE DESIGNATION	STATION	LOCATION	FENCE	WOOD FENCE	CHAIN LINK FENCE
				LF	LF	LF
DEM-1	"M"	10+42.45 TO 11+57.70	Rt	126		
DEM-1	"M"	11+02.01 TO 11+31.11	Rt		43	
DEM-1	"M"	12+03.05	Lt			149
DEM-2	"MR"	50+78.21 TO 51+03.28	Rt			32
			TOTAL	126	43	181

RECONSTRUCT FLAGPOLE

SHEET No.	LINE DESIGNATION	STATION	RECONSTRUCT FLAGPOLE	COMMENT
			EA	
DEM-1	"MR"	51+64.04 TO 51+88.29	2	FLAGPOLE LOCATED ON RETAINING WALL 18.
		TOTAL	2	

WATER LINE

SHEET No.	WATER LINE No.	REMOVE PIPE (WATER LINE)	REMOVE PIPE (ASBESTOS CEMENT)	REMOVE WATER VALVE	6" GATE VALVE	6" COATED DIP	10" COATED DIP	12" COATED DIP	THRUST BLOCKS	6" 11¼° ELBOW	6" 22½° ELBOW	6" 45° ELBOW	6" 90° ELBOW	10" 22½° ELBOW	10" 45° ELBOW	12" 11¼° ELBOW	12" 22½° ELBOW	12" 45° ELBOW
		LF	LF	EA	EA	LF	EA	EA	SF	EA	EA	EA	EA	EA	EA	EA	EA	EA
W-2	1				1			202	36							3		5
W-3	1							617	6								2	
W-4	2				2	130			24	4	6	5	1					
W-5	3				2	38	53		24	5	3	1						
W-5	4				1	122			10					4	2			
W-2		808																
W-4			112	2														
W-5		206		4														
TOTAL		1014	112	6	6	290	53	819	100	9	9	6	1	4	2	3	2	5

REMOVE

SHEET No.	LINE DESIGNATION	STATION	LOCATION	CONCRETE CURB	CONCRETE (EXPOSED AGGRAGTE)	CONCRETE (STAIRS)	METAL BOLLARD	RETAINING WALL (WOOD)	RETAINING WALL
				LF	SQYD	SQYD	EA	LF	SQYD
DEM-1	"M"	11+77.92 TO 11+81.04	Rt	13					
DEM-1	"M"	11+75.46 TO 11+83.62	Rt	14					
DEM-1	"M"	11+82.09 TO 11+82.53	Rt	35					
DEM-1	"M"	11+78.04 TO 11+77.92	Rt		10				
DEM-1	"M"	13+15.00	Rt		14				
DEM-1	"M"	11+25.71 TO 11+77.92	Rt			29			
DEM-2	"MR"	50+78.40	Rt				4		
DEM-2	"M"	16+81.76 TO 17+93.34	Rt					118	
DEM-2	"MR"	51+64.04 TO 51+88.29	Rt					25	
DEM-2	"MR"	51+03.28 TO 51+64.04	Rt						62
DEM-2	"MR"	51+88.29 TO 52+45.75	Rt						60
TOTAL				63	24	29	4	143	122

(N) = NOT A SEPARATE PAY ITEM, FOR INFORMATION ONLY

100% SUBMITTAL NOT FOR CONSTRUCTION

NOTE:
THE CONTRACTOR SHALL VERIFY ALL CONTROLLING FIELD DIMENSIONS BEFORE ORDERING OR FABRICATING ANY MATERIAL.

Q-2

REGISTERED PROFESSIONAL ENGINEER JUSTIN L. CONKLIN No. 80-23 CIVIL STATE OF CALIFORNIA — PRELIMINARY

REGISTERED ENGINEER – CIVIL

TRC Engineers or its officers or agents shall not be responsible for the accuracy or completeness of electronic copies of this plan sheet

CITY OF SANTA CRUZ

PREPARED FOR THE
CITY OF SANTA CRUZ
PUBLIC WORKS DEPARTMENT

	BY	CHECKED
DESIGN	A. BEDAL	J. CONKLIN
DETAILS	D. LOR	J. CONKLIN
QUANTITIES	D. LOR	J. CONKLIN

ORIGINAL SCALE IN INCHES FOR REDUCED PLANS 0 1 2 3

TRC
MARK IMBRIANI
PROJECT MANAGER

BRIDGE NO. 36C0108
CONTRACT NO.
EA NO.

MURRAY STREET BRIDGE
SEISMIC RETROFIT AND BARRIER REPLACEMEN
SUMMARY OF QUANTITIES

DISREGARD PRINTS BEARING EARLIER REVISION DATES
REVISION DATES (PRELIMINARY STAGE ONLY)

SCALE NTS
SHEET 86 OF 167
VAULT NO. XXXXXXX

Drawing name: H:\1161 – Santa Cruz\Road\Sheets\054-Quantities.dwg Layout Tab: Q-2 Sep 21,2021 – 1:03pm DLor

PLANT LEGEND

PLANT GROUP (SIZE)	PLANT NO.	SYMBOL	BOTANICAL NAME	COMMON NAME	WATER USE	HOLE SIZE DIAMETER INCH	HOLE SIZE DEPTH INCH	BASIN TYPE	① WOOD MULCH BASIN CF	APPLICATION RATES PACKET FERTILIZER EA	② SOIL AMENDMENT CF	SLOW-RELEASE FERTILIZER (N) Plt Estb oz	ON CENTER SPACING ft	MINIMUM PLANTING DISTANCE FROM EP ft	FENCE ft	WALL ft	PAVED DITCH ft	EARTH DITCH ft	REMARKS
A (No. 1)	1		ARTEMISIA x 'POWIS CASTLE'	POWIS CASTLE ARTEMISIA	LOW	④	④	I	1.5	1 pkt	0.25	4	③	2	2	2	2	2	SHRUB
	2		BACCHARIS PILULARIS 'PIGEON POINT'	COYOTE BRUSH	LOW	④	④	I	1.5	1 pkt	0.25	4	③	3	3	3	3	3	SHRUB
	3		CEANOTHUS GRISEUS HORIZONTALIS	CARMEL CREEPER	LOW	④	④	I	1.5	1 pkt	0.25	4	③	3	3	3	3	3	SHRUB
	4		ECHIUM CANDICANS	PRIDE OF MADEIRA	LOW	④	④	I	1.5	1 pkt	0.25	4	③	5	5	5	5	5	SHRUB
	5		HETEROMELES ARBUTIFOLIA	TOYON	LOW	④	④	I	1.5	1 pkt	0.25	4	③	5	3	3	5	5	SHRUB
	6		LIMONIUM CALIFORNICA	COASTAL STATICE	LOW	④	④	I	1.5	1 pkt	0.25	4	③	2	2	2	2	2	SHRUB
	7		MUHLENBERGIA RIGENS	DEER GRASS	LOW	④	④	I	1.5	1 pkt	0.25	4	③	2	2	2	2	2	SHRUB
	8		PENNISETUM ORIENTALE	ORIENTAL FOUNTAIN GRASS	MEDIUM	④	④	I	1.5	1 pkt	0.25	4	③	2	2	2	2	2	SHRUB
	9		PENSTEMON MEXICALI 'RED ROCKS'	PENSTEMON	LOW	④	④	I	1.5	1 pkt	0.25	4	③	2	2	2	2	2	SHRUB
	10		PHORMIUM TENAX 'BRONZE BABY'	BRONZE BABY NEW ENGLAND FLAX	LOW	④	④	I	1.5	1 pkt	0.25	4	③	2	2	2	2	2	SHRUB
	11		RHAPHIOLEPIS INDICA	INDIAN HAWTHORN	LOW	④	④	I	1.5	1 pkt	0.25	4	③	3	3	3	3	3	SHRUB
	12		ROSMARINUS OFFICINALIS 'PROSTRATUS'	DWARF ROSEMARY	LOW	④	④	I	1.5	1 pkt	0.25	4	③	3	3	3	3	3	SHRUB
	13		PARTHENOCISSUS TRICUSPIDATA	JAPANESE CREEPER	LOW	④	④	I	1.5	1 pkt	0.25	4	③	-	-	-	-	-	VINE

(N) - NOT A SEPARATE BID ITEM

PLANTING REQUIREMENTS

① WOOD MULCH MUST BE WOOD CHIP

② SOIL AMENDMENT MUST BE PER SOILS REPORT RECOMMENDATION

③ AS SHOWN ON PROJECT PLANS

④ SUFFICIENT TO RECEIVE ROOT BALL

95% SUBMITTAL
NOT FOR CONSTRUCTION

NOTE:
THE CONTRACTOR SHALL VERIFY ALL CONTROLLING FIELD DIMENSIONS BEFORE ORDERING OR FABRICATING ANY MATERIAL.

PL-1

LICENSED LANDSCAPE ARCHITECT
J. Patrick Boyd, No. 4492
July 31, 2017
STATE OF CALIFORNIA

PREPARED FOR THE
CITY OF SANTA CRUZ
PUBLIC WORKS DEPARTMENT

	BY	CHECKED
DESIGN	KJ	PB
DETAILS	KJ	PB
QUANTITIES	KJ	PB

ORIGINAL SCALE IN INCHES FOR REDUCED PLANS 0 1 2 3

BRIDGE NO. 36C0108
CONTRACT NO.
EA NO.

MURRAY STREET BRIDGE
SEISMIC RETROFIT AND BARRIER REPLACEMENT
PLANT LEGEND

DISREGARD PRINTS BEARING EARLIER REVISION DATES
REVISION DATES (PRELIMINARY STAGE ONLY)

SCALE N/A
SHEET 88 of 167
VAULT NO. XXXXXXX

LEGEND:

WOOD MULCH-6" DEPTH

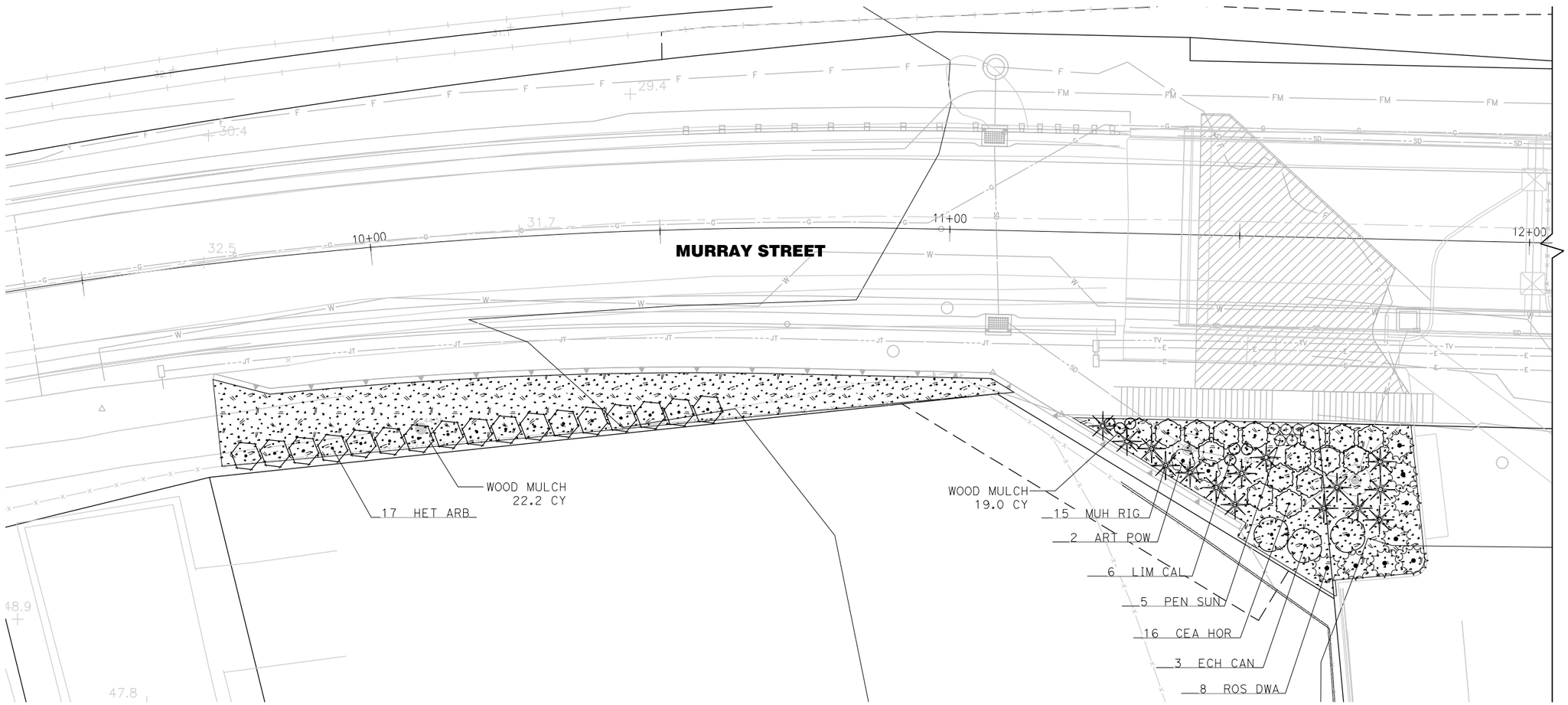

95% SUBMITTAL
NOT FOR CONSTRUCTION

NOTE:
THE CONTRACTOR SHALL VERIFY ALL CONTROLLING FIELD DIMENSIONS BEFORE ORDERING OR FABRICATING ANY MATERIAL.

PP-1

LICENSED LANDSCAPE ARCHITECT
J. Patrick Boyd, No. 4682
Signature
JULY 31, 2017
Date
STATE OF CALIFORNIA

PREPARED FOR THE
CITY OF SANTA CRUZ
PUBLIC WORKS DEPARTMENT

DESIGN	BY KJ	CHECKED PB	
DETAILS	BY KJ	CHECKED PB	
QUANTITIES	BY KJ	CHECKED PB	
ORIGINAL SCALE IN INCHES FOR REDUCED PLANS	0 1 2 3		

BRIDGE NO. 36C0108
CONTRACT NO.
EA NO.

MURRAY STREET BRIDGE
SEISMIC RETROFIT AND BARRIER REPLACEMENT

PLANTING PLAN

DISREGARD PRINTS BEARING EARLIER REVISION DATES

REVISION DATES (PRELIMINARY STAGE ONLY)

SCALE 1"=10'-0"
SHEET 89 of 167
VAULT NO. XXXXXXX

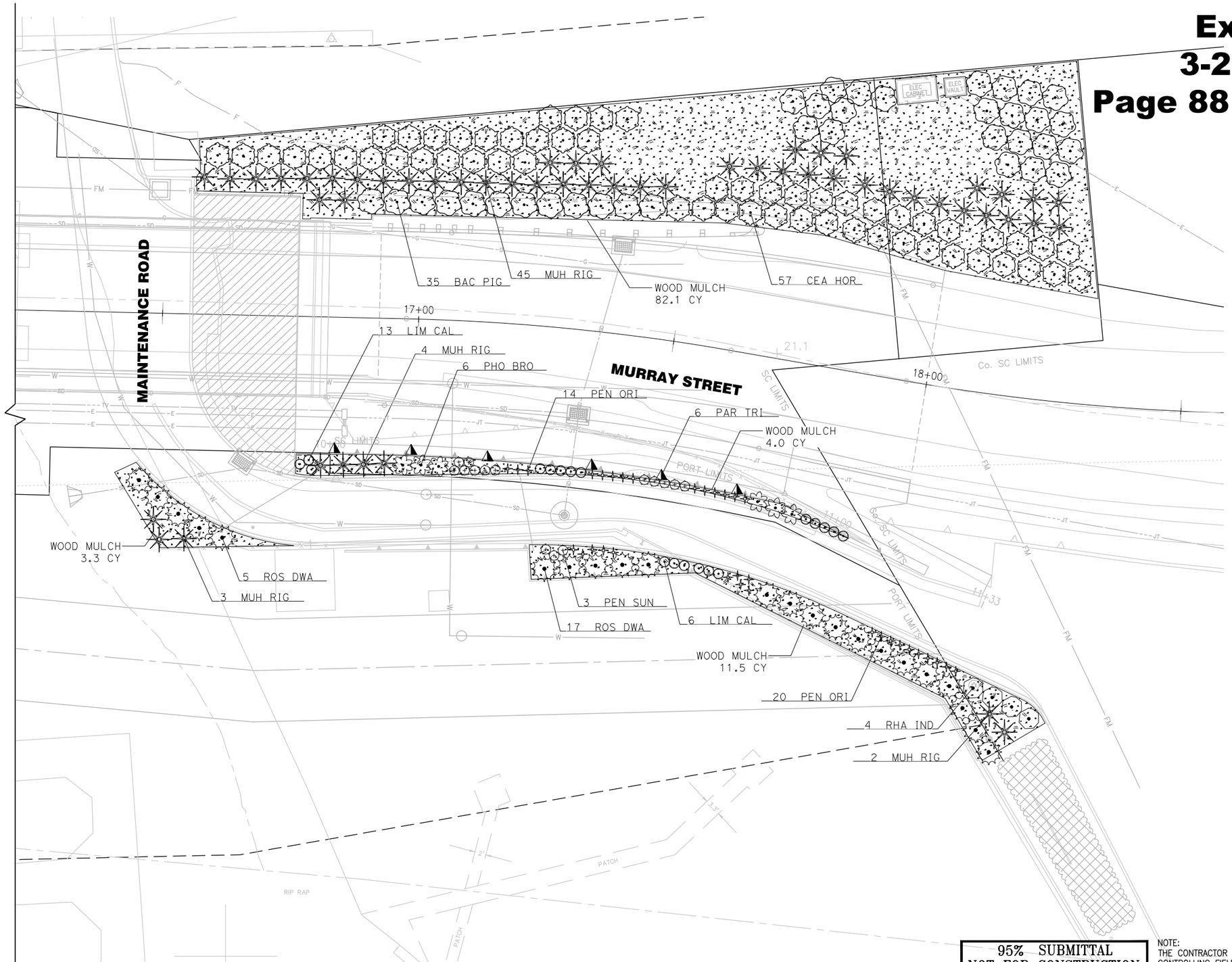

95% SUBMITTAL
NOT FOR CONSTRUCTION

NOTE:
THE CONTRACTOR SHALL VERIFY ALL CONTROLLING FIELD DIMENSIONS BEFORE ORDERING OR FABRICATING ANY MATERIAL.

PP-2

LICENSED LANDSCAPE ARCHITECT
Patrick Boyd, No. 4282
JULY 31, 2017
STATE OF CALIFORNIA

PREPARED FOR THE
CITY OF SANTA CRUZ
PUBLIC WORKS DEPARTMENT

DESIGN	BY KJ	CHECKED PB	
DETAILS	BY KJ	CHECKED PB	
QUANTITIES	BY KJ	CHECKED PB	
ORIGINAL SCALE IN INCHES FOR REDUCED PLANS	0 1 2 3		

BRIDGE NO. 36C0108
CONTRACT NO.
EA NO.

MURRAY STREET BRIDGE
SEISMIC RETROFIT AND BARRIER REPLACEMENT

PLANTING PLAN

DISREGARD PRINTS BEARING EARLIER REVISION DATES →
REVISION DATES (PRELIMINARY STAGE ONLY)

SCALE 1"=10'-0"
SHEET 90 of 167
VAULT NO. XXXXXXX

PLANT QUANTITIES

BOTANICAL NAME	COMMON NAME	PLANT GROUP A	PACKET FERTILIZER	PLANT BASIN	
				SOIL AMENDMENT	WOOD MULCH
		EA	EA	CY	CY
ARTEMISIA × 'POWIS CASTLE'	POWIS CASTLE ARTEMISIA	2	2	0.02	0.12
BACCHARIS PILULARIS 'PIGEON POINT'	COYOTE BRUSH	35	35	0.33	1.95
CEANOTHUS GRISEUS HORIZONTALIS	CARMEL CREEPER	73	73	0.68	4.06
ECHIUM CANDICANS	PRIDE OF MADEIRA	3	3	0.03	0.17
HETEROMELES ARBUTIFOLIA	TOYON	17	17	0.16	0.95
LIMONIUM CALIFORNICA	COASTAL STATICE	25	25	0.24	1.39
MUHLENBERGIA RIGENS	DEER GRASS	69	69	0.64	3.84
PENNISETUM ORIENTALE	ORIENTAL FOUNTAIN GRASS	34	34	0.32	1.89
PENSTEMON MEXICALI 'RED ROCKS'	PENSTEMON	20	20	0.19	1.12
PHORMIUM TENAX 'BRONZE BABY'	BRONZE BABY NEW ENGLAND FLAX	6	6	0.06	0.34
RHAPHIOLEPIS INDICA	INDIAN HAWTHORN	4	4	0.04	0.23
ROSMARINUS OFFICINALIS 'PROSTRATUS'	DWARF ROSEMARY	30	30	0.28	1.67
PARTHENOCISSUS TRICUSPIDATA	JAPANESE CREEPER	6	6	0.06	0.34
	PLANT BASIN SUBTOTAL				18.00
	TOTAL	324	324	3.05	

PLANTING AREA QUANTITIES

SHEET No.	WOOD MULCH
	CY
PP-1	41.2
PP-2	100.9
PLANTING AREA SUBTOTAL	142.1
PLANT BASIN SUBTOTAL	18.00
TOTAL	170.1

95% SUBMITTAL
NOT FOR CONSTRUCTION

NOTE:
THE CONTRACTOR SHALL VERIFY ALL CONTROLLING FIELD DIMENSIONS BEFORE ORDERING OR FABRICATING ANY MATERIAL.

PQ-1

LICENSED LANDSCAPE ARCHITECT
J. Patrick Boyd, No. 4482
JULY 31, 2017
STATE OF CALIFORNIA

PREPARED FOR THE
CITY OF SANTA CRUZ
PUBLIC WORKS DEPARTMENT

DESIGN	BY KJ	CHECKED PB	
DETAILS	BY KJ	CHECKED PB	
QUANTITIES	BY KJ	CHECKED PB	
ORIGINAL SCALE IN INCHES FOR REDUCED PLANS	0 1 2 3		

BRIDGE NO. 36C0108
CONTRACT NO.
EA NO.

MURRAY STREET BRIDGE
SEISMIC RETROFIT AND BARRIER REPLACEMENT
PLANT QUANTITIES

DISREGARD PRINTS BEARING EARLIER REVISION DATES
REVISION DATES (PRELIMINARY STAGE ONLY)

SCALE N/A
SHEET 91 of 167
VAULT NO. XXXXXXX

IRRIGATION SPRINKLER SCHEDULE

SYMBOL	DESCRIPTION	OPERATING PRESSURE (psi)	PRESSURE COMPENSATING	PLUS/MINUS 5% DISCHARGE GALLONS PER MINUTE (GPH)	REMARKS
⊡	DRIP EMITTER	20	X	2	NON POTABLE

IRRIGATION QUANTITIES (LATERAL SUPPLY SIDE OF CONTROL VALVE)

CONTROLLER LETTER	VALVE NUMBER	3/4" PLASTIC PIPE(CLASS 200) SUPPLY LINE (NON POTABLE)	1/2" DRIP IRRIGATION TUBING (NON POTABLE)	SPRINKLER ASSEMBLY (N) DRIP EMITTER (NON POTABLE)
		LF	LF	EA
CAM COUPLER	1	5	440	72
	2	5	770	136
A	1	5	530	115
TOTAL		15	1,740	

(N) - NOT A SEPARATE BID ITEM

IRRIGATION QUANTITIES (MAIN SUPPLY SIDE OF CONTROL VALVE)

SHEET NUMBER	1" CAM COUPLER ASSEMBLY (NON POTABLE)	VALVES: 3/4" DRIP VALVE ASSEMBLY (NON POTABLE)	3/4"PLASTIC PIPE (CL 315) SUPPLY LINE (NON POTABLE)
	EA	EA	LF
IP-1	1	1	5
IP-2	1	2	10
TOTAL	2	3	15

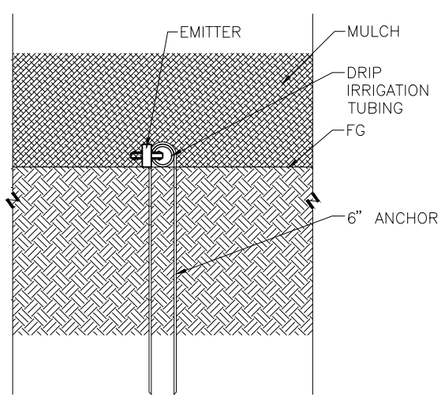

1 DRIP IRRIGATION TUBING
6" = 1'-0" DL-IR-SPR-DRIP-41

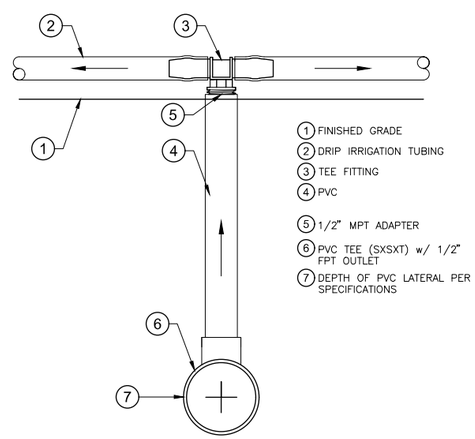

2 DRIP IRRIGATION TUBING LATERAL CONNECTION
6" = 1'-0" DL-IR-SPR-DRIP-38

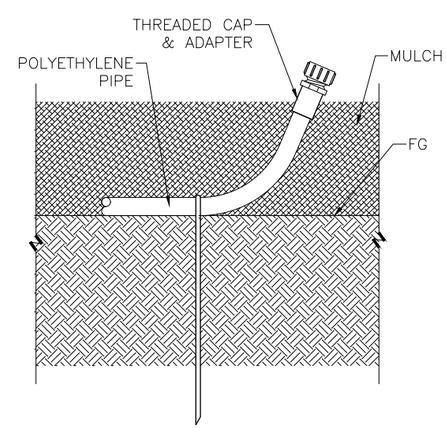

3 FLUSH VALVE - MANUAL - TERMINAL END
6" = 1'-0" DL-IR-SPR-DRIP-30

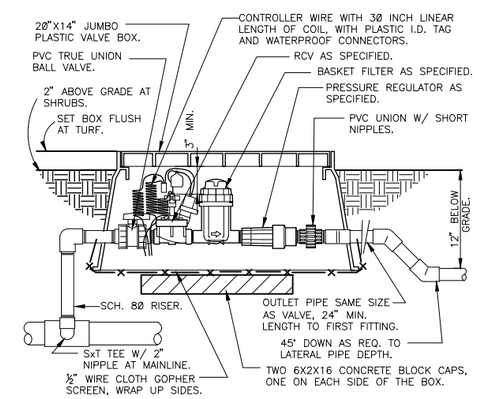

4 3/4" DRIP VALVE ASSEMBLY
1 1/2" = 1'-0" 328413.76-26

95% SUBMITTAL
NOT FOR CONSTRUCTION

NOTE:
THE CONTRACTOR SHALL VERIFY ALL CONTROLLING FIELD DIMENSIONS BEFORE ORDERING OR FABRICATING ANY MATERIAL.

ISS-1

LICENSED LANDSCAPE ARCHITECT
Patrick Boyd, No. 4182
JULY 31, 2017
STATE OF CALIFORNIA

PREPARED FOR THE
CITY OF SANTA CRUZ
PUBLIC WORKS DEPARTMENT

	BY		CHECKED	
DESIGN	KJ		PB	
DETAILS	KJ		PB	
QUANTITIES	KJ		PB	

ORIGINAL SCALE IN INCHES FOR REDUCED PLANS 0 1 2 3

BRIDGE NO. 36C0108
CONTRACT NO.
EA NO.

MURRAY STREET BRIDGE
SEISMIC RETROFIT AND BARRIER REPLACEMENT
IRRIGATION SPRINKLER SCHEDULE, QUANTITY AND DETAILS

DISREGARD PRINTS BEARING EARLIER REVISION DATES
REVISION DATES (PRELIMINARY STAGE ONLY)

SCALE N/A
SHEET 92 of 167
VAULT NO. XXXXXXX

LEGEND:

- 1" CAM COUPLER ASSEMBLY
- 3/4" DRIP VALVE ASSEMBLY

VALVE CALLOUT:

CC1	
¾"	1.93

VALVE SIZE — VALVE NUMBER — GALLONS PER MINUTE (GPM)

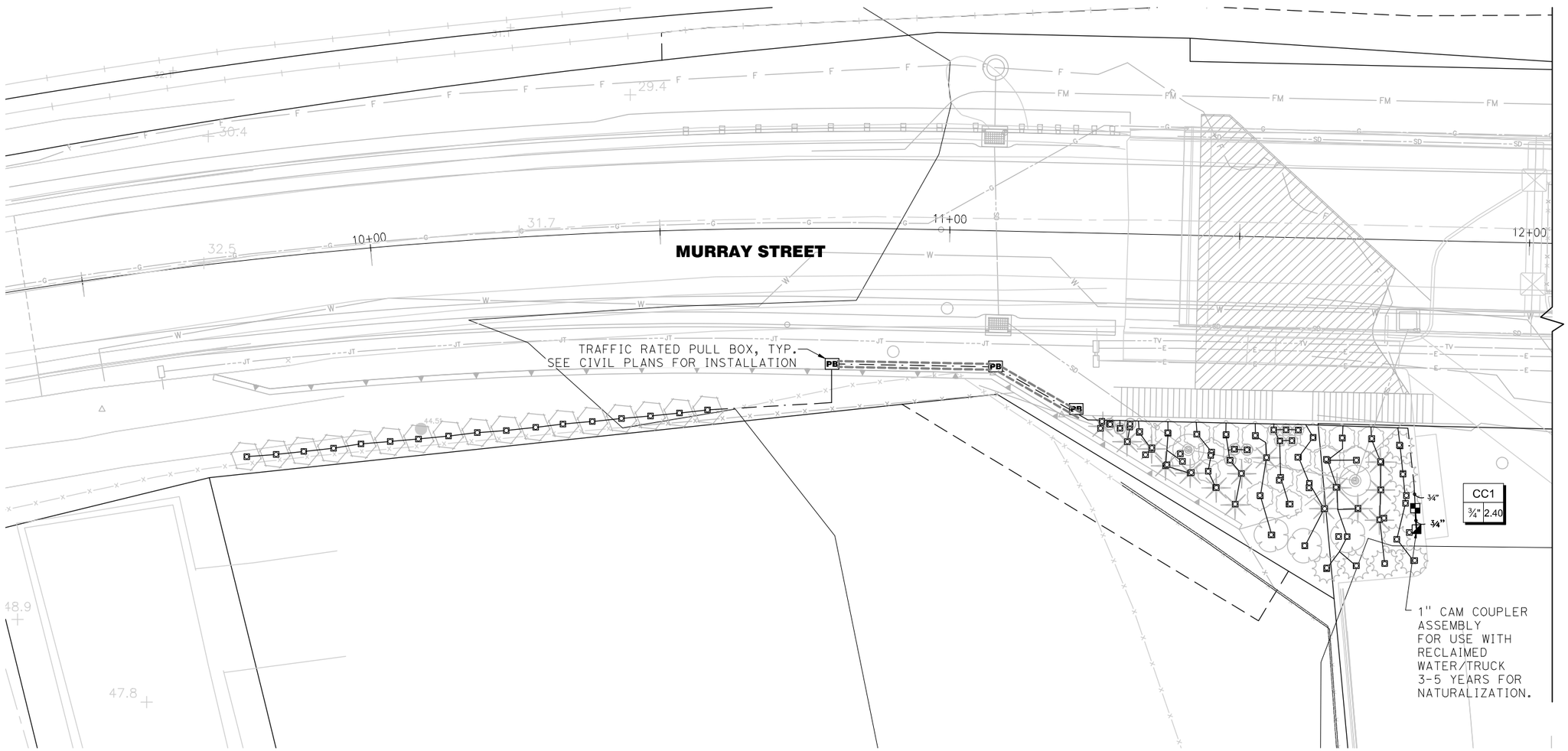

95% SUBMITTAL
NOT FOR CONSTRUCTION

NOTE:
THE CONTRACTOR SHALL VERIFY ALL CONTROLLING FIELD DIMENSIONS BEFORE ORDERING OR FABRICATING ANY MATERIAL.

IP-1

LICENSED LANDSCAPE ARCHITECT — Patrick Boyd, No. 4282 — JULY 31, 2017 — STATE OF CALIFORNIA

PREPARED FOR THE
CITY OF SANTA CRUZ
PUBLIC WORKS DEPARTMENT

	BY	CHECKED
DESIGN	KJ	PB
DETAILS	KJ	PB
QUANTITIES	KJ	PB

ORIGINAL SCALE IN INCHES FOR REDUCED PLANS 0 1 2 3

BRIDGE NO. 36C0108
CONTRACT NO.
EA NO.

MURRAY STREET BRIDGE
SEISMIC RETROFIT AND BARRIER REPLACEMENT
IRRIGATION PLAN

DISREGARD PRINTS BEARING EARLIER REVISION DATES
REVISION DATES (PRELIMINARY STAGE ONLY)

SCALE 1"=10'-0"
SHEET 93 of 167
VAULT NO. XXXXXXX

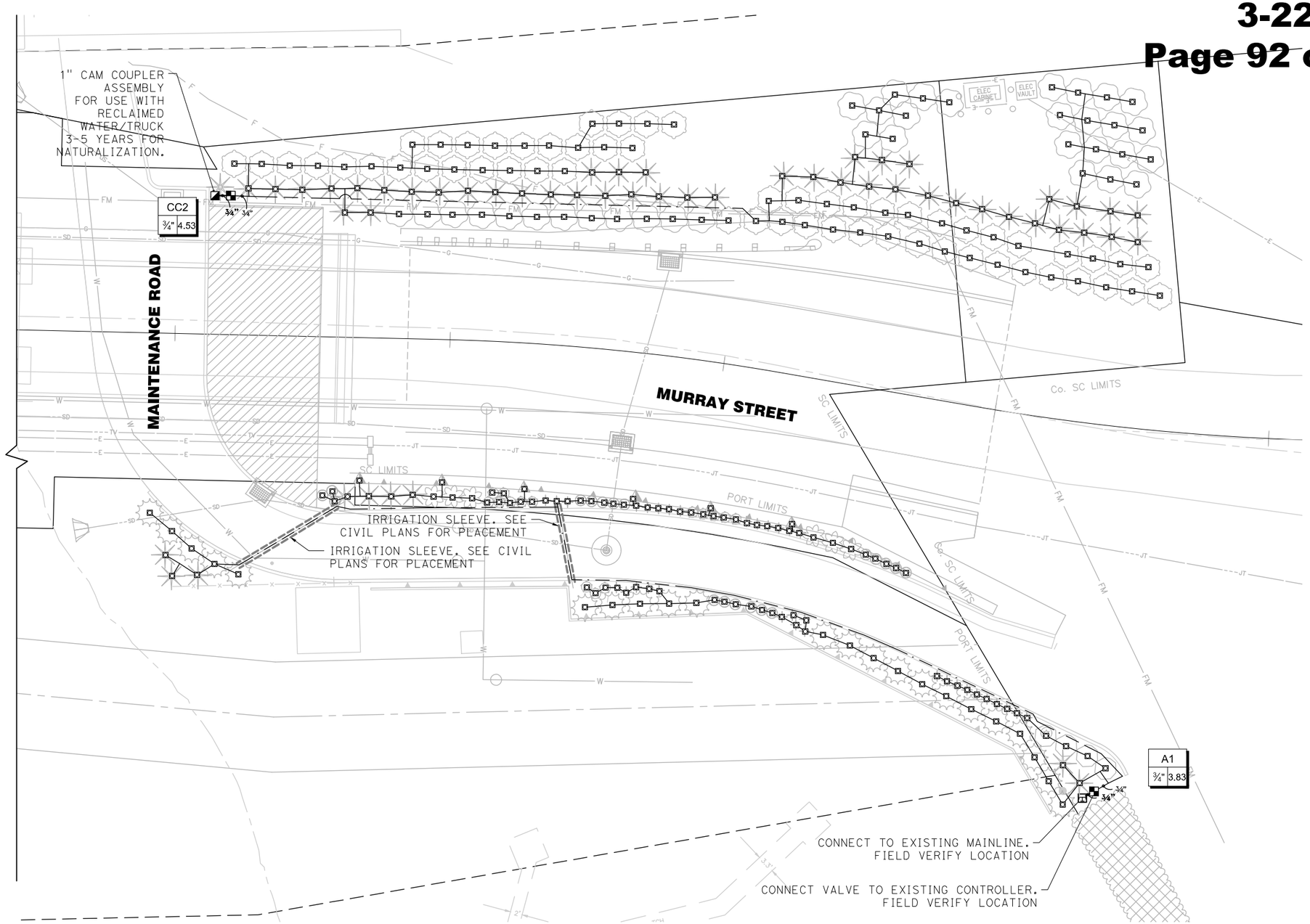

95% SUBMITTAL
NOT FOR CONSTRUCTION

NOTE:
THE CONTRACTOR SHALL VERIFY ALL CONTROLLING FIELD DIMENSIONS BEFORE ORDERING OR FABRICATING ANY MATERIAL.

IP-2

LICENSED LANDSCAPE ARCHITECT
J. Patrick Boyd, No. 4482
JULY 31, 2017
STATE OF CALIFORNIA

PREPARED FOR THE
CITY OF SANTA CRUZ
PUBLIC WORKS DEPARTMENT

DESIGN	BY PBKJ	CHECKED KJ PB	
DETAILS	BY KJ	CHECKED PB	
QUANTITIES	BY KJ	CHECKED PB	
ORIGINAL SCALE IN INCHES FOR REDUCED PLANS	0 1 2 3		

BRIDGE NO. 36C0108
CONTRACT NO.
EA NO.

MURRAY STREET BRIDGE
SEISMIC RETROFIT AND BARRIER REPLACEMENT

IRRIGATION PLAN

DISREGARD PRINTS BEARING EARLIER REVISION DATES
REVISION DATES (PRELIMINARY STAGE ONLY)

SCALE 1"=10'-0"
SHEET 94 of 167
VAULT NO. XXXXXXX

THIS PLAN ACCURATE FOR ELECTRICAL WORK ONLY.

Exhibit 3
3-22-0165
Page 93 of 176

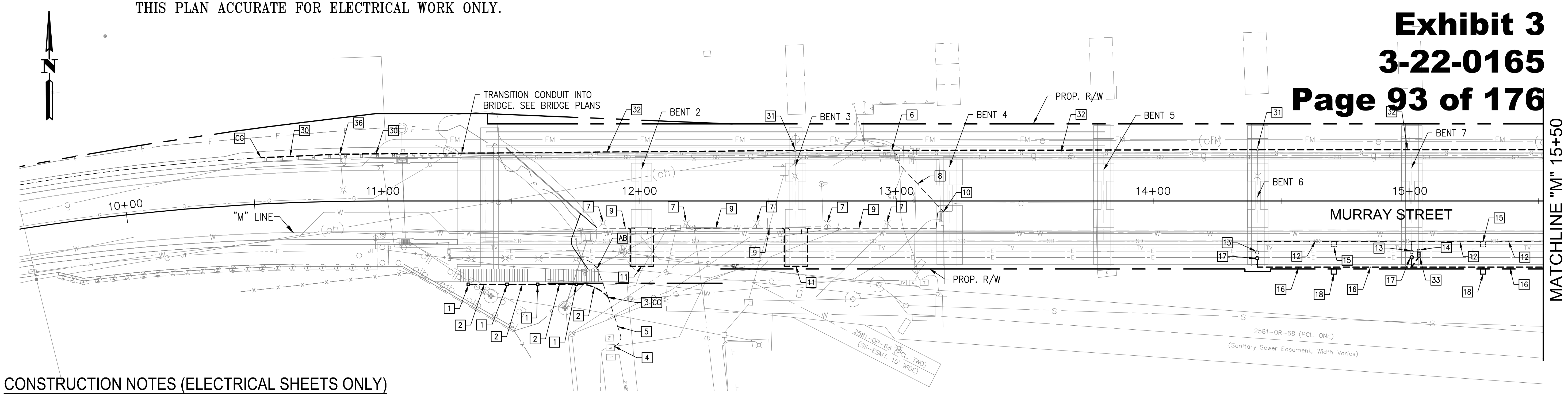

CONSTRUCTION NOTES (ELECTRICAL SHEETS ONLY)

1. CONSTRUCT CONCRETE STAIRWAY LIGHTING PILASTER WITH LOUVERED LED LIGHT FIXTURE. SEE DETAIL ON SHEET CD-6.
2. FURNISH AND INSTALL 3/4" PVC CONDUIT WITH 2 #10 (STAIRWAY LIGHTING) AND 1 #10 (GROUND).
3. CONNECT NEW CONDUIT TO EXISTING CONDUIT. REMOVE EXISTING CONDUCTORS BACK TO POINT OF CONNECTION FOR STAIRWAY LIGHTING PRIOR TO CUTTING EXISTING CONDUIT.
4. POINT OF CONNECTION FOR STAIRWAY LIGHTING.
5. EXISTING 3/4" PVC CONDUIT. REMOVE EXISTING STAIRWAY LIGHTING AND GROUND CONDUCTORS (BECOME PROPERTY OF CONTRACTOR.) FURNISH AND INSTALL NEW 2 #10 (STAIRWAY LIGHTING) AND 1 #10 (GROUND).
6. POINT OF CONNECTION FOR SOFFIT LIGHTING (WEST END).
7. REMOVE EXISTING SOFFIT LIGHT & FURNISH SOFFIT LUMINARE PER CALTRANS STD. ES-9E DETAIL 9.
8. MAINTAIN EXISTING UNDERGROUND SOFFIT LIGHTING CONDUIT. REMOVE EXISTING CONDUCTORS TO POINT OF CONNECTION FOR SOFFIT LIGHTING (BECOME PROPERTY OF CONTRACTOR). FURNISH AND INSTALL 2 #10 (SOFFIT LIGHTING) AND 1 #10 (GROUND).
9. EXISTING 3/4" CONDUIT MOUNTED TO BRIDGE STRUCTURE FOR SOFFIT LIGHTING. REMOVE EXISTING CONDUCTORS TO POINT OF CONNECTION FOR SOFFIT LIGHTING (BECOME PROPERTY OF CONTRACTOR). FURNISH AND INSTALL 2 #10 (SOFFIT LIGHTING) AND 1 #10 (GROUND).
10. EXISTING CONDUIT TRANSITIONS FROM UNDERGROUND TO VERTICAL COLUMN MOUNTED. REMOVE EXISTING CONDUCTORS TO POINT OF CONNECTION FOR SOFFIT LIGHTING (BECOME PROPERTY OF CONTRACTOR.) FURNISH AND INSTALL 2 #10 (SOFFIT LIGHTING) AND 1 #10 (GROUND).
11. EXISTING CONDUIT TRANSITIONS AROUND THE BENT AND GIRDER. REMOVE EXISTING CONDUIT BETWEEN CONDUIT BODIES. REMOVE EXISTING CONDUCTORS TO POINT OF CONNECTION FOR SOFFIT LIGHTING (BECOME PROPERTY OF CONTRACTOR). FURNISH AND INSTALL NEW 3/4" TYPE NM FLEXIBLE CONDUIT AND LB CONDUIT BODIES AS NECESSARY TO TRANSITION AROUND NEW BENT EXTENSION AND GIRDERS (SEE DETAIL 2.) FURNISH AND INSTALL 2 #10 (SOFFIT LIGHTING) AND 1 #10 (GROUND).
12. REMOVE EXISTING BRIDGE-MOUNTED CONDUIT AND CONDUCTORS (BECOME PROPERTY OF CONTRACTOR.)
13. REMOVE AND SALVAGE EXISTING RED NAVIGATION LIGHT MOUNTED ON TOP OF FOOTING.
14. REMOVE AND SALVAGE EXISTING AERATOR STARTER BOX.
15. REMOVE AND SALVAGE EXISTING GREEN NAVIGATION LIGHT AND SWIVEL MOUNTING FROM OUTER EDGE OF BRIDGE RAILING.
16. FURNISH AND INSTALL 1.25" TYPE NM FLEXIBLE CONDUIT MOUNTED TO BOTTOM OF BRIDGE DECK BELOW BRIDGE RAIL. USE CONDUIT BODIES AS NECESSARY TO MAKE 90-DEGREE TURNS. FURNISH AND INSTALL 2 #10 (NAVIGATION LIGHTING), 3 #6 (AERATOR STARTER BOX), AND 1 #8 (GROUND).
17. FURNISH AND INSTALL 180-DEGREE RED PIER LIGHT WITH ALUMINUM HOUSING (EDKO FEDERAL SERIES TYPE 1 PIER LIGHT, B&B ROADWAY PL PIER LIGHT, OR APPROVED EQUAL).
18. FURNISH AND INSTALL 360-DEGREE GREEN NAVIGATION LIGHT WITH ALUMINUM HOUSING WITH SWIVEL ARM (EDKO FEDERAL SERIES TYPE 1-P PILOT TYPE NAVIGATION LIGHT, B&B ROADWAY CC CENTER CHANNEL LIGHT, OR APPROVED EQUAL). BASE SHALL BE MOUNTED IN A POSITION, AND ARM SHALL BE OF AN APPROPRIATE LENGTH, TO ALLOW THE LIGHT TO EXTEND BELOW THE BOTTOM OF THE BRIDGE DECK (VISIBLE FROM 360-DEGREES) AND ALSO SWIVEL TO THE TOP OF BRIDGE RAIL FOR BULB REPLACEMENT.
19. EXISTING 2" PVC CONDUIT CONTAINING MAIN FEED TO SERVICE PANEL. PULL BACK CONDUCTORS. REMOVE AND DISPOSE OF EXISTING CONDUIT WITHIN LIMITS OF NEW FOUNDATION. CONNECT NEW CONDUIT TO EXISTING CONDUIT. CONNECT CONDUCTORS TO NEW SERVICE PANEL. CONTRACTOR SHALL COORDINATE SHUTDOWN OF POWER WITH PG&E & SANTA CRUZ HARBOR. CONTRACTOR TO PROVIDE TEMPORARY POWER TO MAINTAIN 24-HOUR OPERATION OF NAVIGATION LIGHTS.
20. EXISTING 2" PVC CONDUIT CONTAINING DREDGE DISCONNECT CONDUCTORS (EXISTING BREAKERS 14, 16, AND 18) AND BOOSTER CONDUCTORS (EXISTING BREAKERS 15 AND 17). PULL BACK CONDUCTORS. REMOVE AND DISPOSE OF EXISTING CONDUIT WITHIN LIMITS OF NEW FOUNDATION. CONNECT NEW CONDUIT TO EXISTING CONDUIT. CONTRACTOR SHALL COORDINATE SHUTDOWN OF POWER WITH SANTA CRUZ HARBOR. CONTRACTOR TO PROVIDE TEMPORARY POWER TO MAINTAIN 24-HOUR OPERATION OF DREDGE AND BOOSTER.
21. EXISTING 1" PVC CONDUIT CONTAINING RAILROAD BRIDGE AERATOR CONDUCTORS (EXISTING BREAKERS 8, 10, AND 12) WITH NORTH PATHWAY LIGHTING SPLICED TO THEM. PULL BACK CONDUCTORS. REMOVE AND DISPOSE OF EXISTING CONDUIT WITHIN LIMITS OF NEW FOUNDATION. CONNECT NEW CONDUIT TO EXISTING CONDUIT. CONTRACTOR SHALL COORDINATE SHUTDOWN OF POWER WITH SANTA CRUZ HARBOR. CONTRACTOR TO PROVIDE TEMPORARY POWER TO MAINTAIN 24-HOUR OPERATION OF AERATOR.
22. EXISTING EMPTY 2" PVC CONDUIT. CONNECT NEW CONDUIT TO EXISTING CONDUIT NEAR NEW SERVICE PANEL.
23. FURNISH AND INSTALL 2" PVC CONDUIT WITH 2 #10 (PATHWAY LIGHTING) AND 1 #10 (GROUND).
24. REMOVE AND DISPOSE OF EXISTING 120/208 VOLT SERVICE PANEL, ENCLOSURE, AND PHOTOELECTRIC CELL. DISCONNECT EXISTING CIRCUITS. PROVIDE TEMPORARY POWER TO ALL EXISTING CIRCUITS TO MAINTAIN CONTINUOUS 24-HOUR OPERATION.
25. FURNISH AND INSTALL NEW SERVICE PANEL (255-AMP MAIN CIRCUIT BREAKER, 120/208 VOLT, 3-PHASE, 4-WIRE, 60 Hz) WITH WALL-MOUNTED NEMA TYPE 4X ENCLOSURE. ENCLOSURE SHALL ACCOMMODATE ALL CONDUITS INDICATED ON THE PLANS AND SHALL BE EQUIPPED WITH A PHOTOELECTRIC UNIT TO CONTROL THE SOFFIT LIGHTING. SERVICE PANEL SHALL HAVE THE FOLLOWING CIRCUIT BREAKERS:

CIRCUIT BREAKER	DESCRIPTION
20A, 120V, 1P	LIGHTING CONTACTOR (SOFFIT LIGHT)
20A, 120V, 1P	MURRAY BRIDGE NAVIGATION LIGHTS
20A, 120V, 1P	PATHWAY LIGHTING
40A, 208V, 3P	MURRAY BRIDGE AERATOR
30A, 208V, 2P	BOOSTER PUMP (DREDGE)
20A, 120V, 1P	PHOTO CELL (SOFFIT LIGHT)
20A, 120V, 1P	RAILROAD BRIDGE NAVIGATION LIGHTS & NORTH LIGHTING
40A, 208V, 3P	RAILROAD BRIDGE AERATOR
100A, 208V, 3P	DREDGE DISCONNECT
20A, 120V, 1P	SPARE
20A, 120V, 1P	SPARE

26. TRANSITION UNDERGROUND CONDUIT INTO RETAINING WALL-SEE RETAINING WALL PLANS.
27. FURNISH AND INSTALL 2" CONDUIT WITHIN PROPOSED RETAINING WALL (SEE RETAINING WALL PLANS) WITH 2 #10 (PATHWAY LIGHTING) AND 1 #10 (GROUND).
28. REMOVE AND SALVAGE EXISTING PATHWAY LIGHT POLE TO SANTA CRUZ HARBOR. COMPLETELY REMOVE AND DISPOSE OF EXISTING FOUNDATION. FURNISH AND INSTALL NEW LIGHT POLE (McGRAW-EDISON RSA4T12AFZ1 OR APPROVED EQUAL). RE-USE LUMINAIRE AND HOUSING ON NEW POLE. CONSTRUCT FOUNDATION SIMILAR TO CALTRANS STANDARD PLAN ES-7B, TYPE 1-A..
29. REMOVE AND SALVAGE EXISTING PATHWAY LIGHT POLE TO SANTA CRUZ HARBOR. COMPLETELY REMOVE AND DISPOSE OF EXISTING FOUNDATION. FURNISH AND INSTALL NEW LIGHT POLE (McGRAW-EDISON RSA4T12AFZ1 OR APPROVED EQUAL) MOUNTED TO TOP OF RETAINING WALL (SEE RETAINING WALL PLANS). RE-USE LUMINAIRE AND HOUSING ON NEW POLE.
30. WITHIN LIMITS OF NEW GUARD RAIL, FURNISH & INSTALL 2" SCH 40 PVC CONDUIT WITH 2 #8 (STREET LIGHTS) & 1 #8 (GROUND). ABANDON EXISTING CONDUIT. SPLICE NEW CONDUCTORS TO EXISTING STREET LIGHT CIRCUIT.
31. REMOVE & RE-INSTALL EXISTING ELECTROLIER POLE.
32. FURNISH AND INSTALL 2" SCH 40 PVC CONDUIT WITH 2 #8 (STREET LIGHTS) AND 1 #8 (GROUND) WITHIN PROPOSED BRIDGE. SEE BRIDGE PLANS.
33. FURNISH & INSTALL AERATOR STARTER, SQUARE D MODEL SDW12V08, OR APPROVED EQUAL.
34. CONDUITS CORRESPONDING TO CONSTRUCTION NOTES 19, 20, 21, 22, & 23 SHALL BE FURNISHED & INSTALLED BETWEEN THE NEW SERVICE PANEL AND THE EXISTING CONDUIT TO REMAIN AT THE CC LOCATION, IF ANY. CONDUIT SHALL BE WALL-MOUNTED BETWEEN THE SERVICE PANEL & TOP OF FOUNDATION. CONDUIT SHALL BE MOUNTED TO THE TOP OF FOUNDATION & SIDE OF FOUNDATION, THEN UNDERGROUND BEYOND THE LIMITS OF THE FOUNDATION. CONDUIT BODIES MAY BE USED TO FACILITATE WIRE INSTALLATION AT 90° TURNS ON THE FOUNDATION AND BENT.
35. FURNISH AND INSTALL CALTRANS NO. 3½(E) PULL BOX.
36. REMOVE STREET LIGHT POLE, FOUNDATION, CONDUCTORS AND CONDUIT AS NECESSARY FOR SEWER CONSTRUCTION. CONSTRUCT NEW FOUNDATION PER CITY OF SANTA CRUZ STANDARD DRAWING ELECTROLIER (TYPE I). CONFIRM BOLT PATTERN OF EXISTING POLE PRIOR TO CONSTRUCTING NEW FOUNDATION. RE-INSTALL EXISTING POLE WITH NEW CONDUIT AND CONDUCTORS AS NECESSARY.

LEGEND:

- - - - - -	EXISTING CONDUIT
— — — — —	PROPOSED CONDUIT
¤	EXISTING SOFFIT LIGHT
¤	PROPOSED PATHWAY LIGHT
AB	ABANDONED. IF APPLIED TO CONDUIT, REMOVE CONDUCTORS
CC	CONNECT NEW AND EXISTING CONDUIT. REMOVE EXISTING CONDUCTORS AND INSTALL CONDUCTORS AS INDICATED

FOR OTHER SYMBOLS REFER TO STATE STANDARD DRAWINGS.

SPECIAL NOTES

UNDERGROUND FACILITIES SHOWN WERE LOCATED BASED ON INFORMATION PROVIDED BY UTILITY COMPANIES AND BY MEASURING SURFACE FEATURES. NO ATTEMPT WAS MADE TO LOCATE OTHER UNDERGROUND FACILITIES THAT WERE NOT READILY APPARENT FROM A VISUAL INSPECTION OF SURFACE FEATURES.

CONTRACTOR SHALL VERIFY ACTUAL DEPTH AND LOCATION OF ALL EXISTING UTILITIES PRIOR TO CONSTRUCTION. CALL "UNDERGROUND SERVICE ALERT" (U.S.A.), TOLL FREE 811 PRIOR TO TRENCHING, GRADING, EXCAVATION, DRILLING, PIPE PUSHING, PLANTING TREES, DIGGING POST HOLES FOR FENCES, ETC. U.S.A. WILL SUPPLY INFORMATION OR LOCATE AND MARK ANY UNDERGROUND FACILITIES.

NOTE:
THE CONTRACTOR SHALL VERIFY ALL CONTROLLING FIELD DIMENSIONS BEFORE ORDERING OR FABRICATING ANY MATERIAL.

811
Know what's **below.**
Call before you dig.

95% SUBMITTAL
NOT FOR CONSTRUCTION

E-1

REGISTERED PROFESSIONAL ENGINEER — JOHN ROWLAND — No. 62733 — Exp. 12-31-22 — CIVIL — STATE OF CALIFORNIA
PRELIMINARY
REGISTERED ENGINEER – CIVIL
PETERS ENGINEERING GROUP or its officers or agents shall not be responsible for the accuracy or completeness of electronic copies of this plan sheet

CITY OF SANTA CRUZ
PREPARED FOR THE
CITY OF SANTA CRUZ
PUBLIC WORKS DEPARTMENT

	BY	CHECKED
DESIGN	M.VERDUZCO	J.ROWLAND
DETAILS	M.VERDUZCO	J.ROWLAND
QUANTITIES		

ORIGINAL SCALE IN INCHES FOR REDUCED PLANS 0 1 2 3

PETERS ENGINEERING GROUP
862 Pollasky Avenue
Clovis, California 93612
Phone (559) 299-1544

BRIDGE NO. 36C0108
CONTRACT NO.
EA NO.

MURRAY STREET BRIDGE
SEISMIC RETROFIT AND BARRIER REPLACEMENT
ELECTRICAL PLAN

DISREGARD PRINTS BEARING EARLIER REVISION DATES
REVISION DATES (PRELIMINARY STAGE ONLY)

SCALE 1"=20'
SHEET 95 of 167
VAULT NO. XXXXXXX

THIS PLAN ACCURATE FOR ELECTRICAL WORK ONLY.

Exhibit 3
3- 22-0165
Page 94 of176

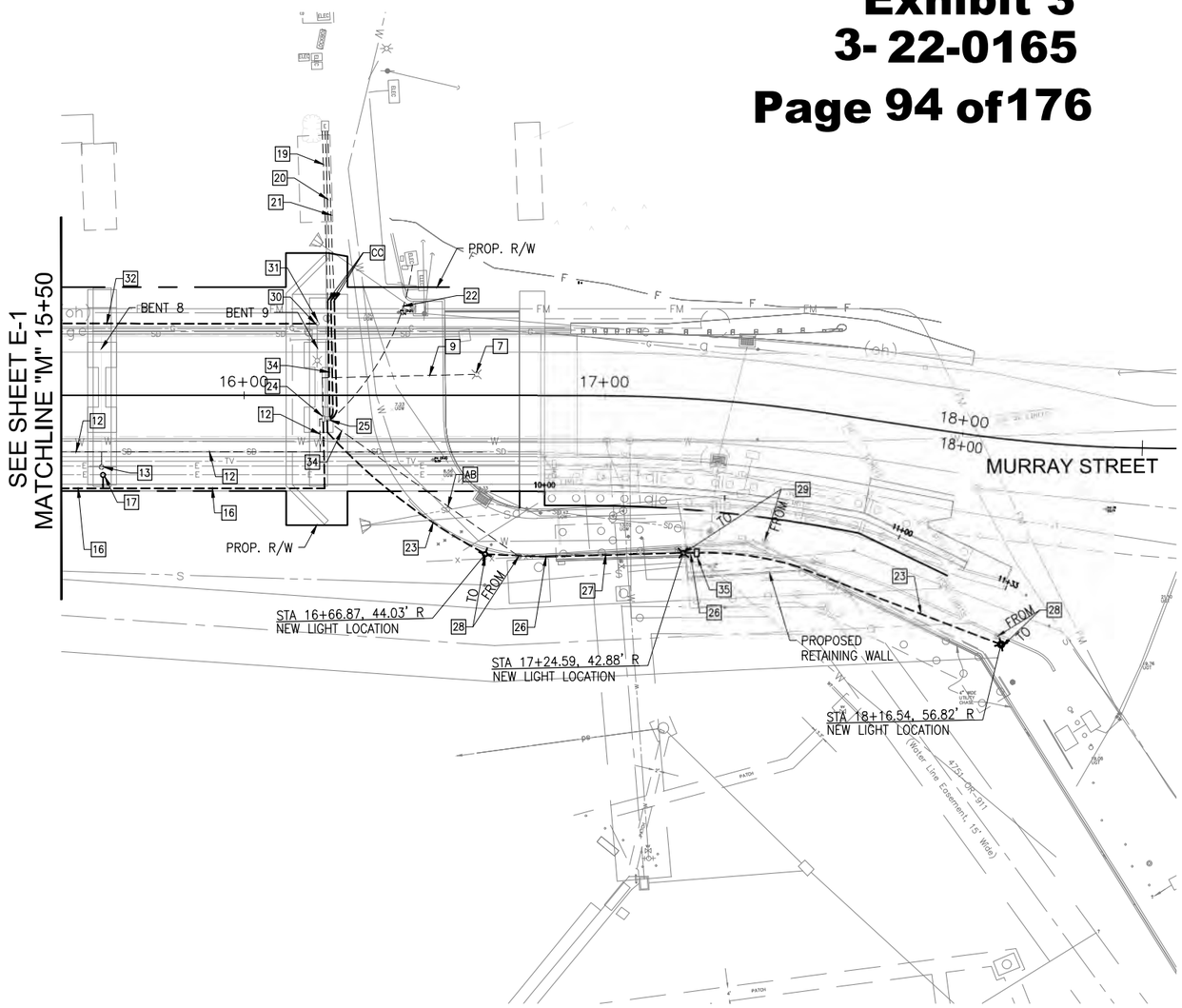

GENERAL NOTES (SHEETS E-1 & E-2 ONLY)

1. WORK SHALL BE DONE IN ACCORDANCE WITH THE STATE OF CALIFORNIA DEPARTMENT OF TRANSPORTATION STANDARD PLANS AND SPECIFICATIONS, 2018 EDITION, AND THE LATEST EDITION OF THE CITY OF SANTA CRUZ STANDARD SPECIFICATIONS AND DRAWINGS.
2. THESE PLANS ARE ACCURATE FOR ELECTRICAL WORK ONLY.
3. THE CONTRACTOR IS RESPONSIBLE FOR VERIFICATION OF ALL EXISTING UTILITIES WHETHER OR NOT THEY ARE SHOWN ON THESE PLANS, AND SHALL PROVIDE PROTECTION PRIOR TO, DURING, AND AFTER TRENCHING, JACKING AND/OR BORING. THE CONTRACTOR SHALL CONTACT UNDERGROUND SERVICE ALERT (USA) BY CALLING 811 AT LEAST TWO (2) WORKING DAYS BEFORE BEGINNING WORK.
4. CONTRACTOR SHALL ARRANGE WITH UTILITY COMPANIES FOR ALL REQUIRED UTILITY RELOCATIONS, INCLUDING OVERHEAD CONFLICTS.
5. ALL FACILITIES, INCLUDING CABINETS, PULL BOXES, AND CONDUITS, ARE SHOWN IN THEIR APPROXIMATE LOCATIONS. AFTER ALL UNDERGROUND UTILITIES ARE MARKED, THE CONTRACTOR SHALL MARK FINAL LOCATIONS IN THE FIELD AND NOTIFY THE ENGINEER AT LEAST TWO (2) WORKING DAYS PRIOR TO COMMENCING WORK TO OBSERVE THE MARKED LOCATIONS.
6. NAVIGATION LIGHTS MUST BE OPERATIONAL AT ALL TIMES. CONTRACTOR SHALL FURNISH & INSTALL TEMPORARY NAVIGATION LIGHTS IF NECESSARY TO PROVIDE 24-HOUR OPERATION. CONTRACTOR SHALL BE RESPONSIBLE FOR PROVIDING TEMPORARY POWER.
7. CONTRACTOR SHALL BE RESPONSIBLE FOR PROVIDING TEMPORARY POWER TO ALL EXISTING CIRCUITS (DREDGE, AERATORS, NAVIGATION LIGHTS, LIGHTING, ETC.) ON A 24-HOUR BASIS DURING CONSTRUCTION. ANY DEVIATION REQUIRES THE APPROVAL OF THE ENGINEER.

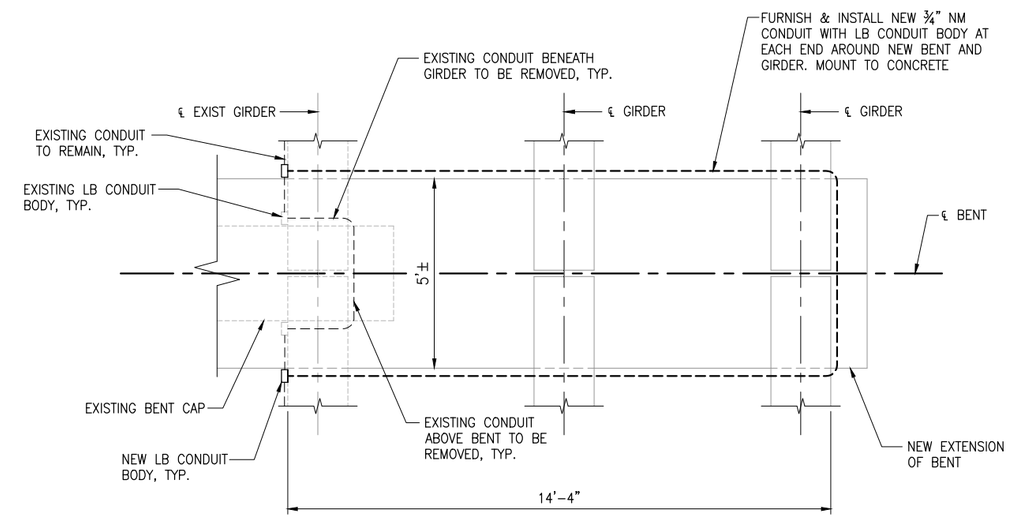

DETAIL 2 - SOFFIT CONDUIT AT BENTS 2 & 3
NTS

95% SUBMITTAL
NOT FOR CONSTRUCTION

E-2

REGISTERED PROFESSIONAL ENGINEER JOHN ROWLAND No. 62753 Exp. 12-31-22 CIVIL STATE OF CALIFORNIA
PRELIMINARY
REGISTERED ENGINEER – CIVIL
PETERS ENGINEERING GROUP or its officers or agents shall not be responsible for the accuracy or completeness of electronic copies of this plan sheet

CITY OF SANTA CRUZ
PREPARED FOR THE
CITY OF SANTA CRUZ
PUBLIC WORKS DEPARTMENT

DESIGN	BY M. VERDUZCO	CHECKED J.ROWLAND
DETAILS	BY M. VERDUZCO	CHECKED J.ROWLAND
QUANTITIES	BY	CHECKED
ORIGINAL SCALE IN INCHES FOR REDUCED PLANS	0 1 2 3	

PETERS ENGINEERING GROUP
862 POLLASKY AVENUE
CLOVIS, CALIFORNIA 93612
PHONE (559) 299-1544

BRIDGE NO. 36C0108
CONTRACT NO.
EA NO.

MURRAY STREET BRIDGE
SEISMIC RETROFIT AND BARRIER REPLACEMENT
ELECTRICAL PLAN

DISREGARD PRINTS BEARING EARLIER REVISION DATES
REVISION DATES (PRELIMINARY STAGE ONLY)

SCALE 1"=20'
SHEET 96 of 167
VAULT NO. XXXXXXX

THIS PLAN ACCURATE FOR ELECTRICAL WORK ONLY.

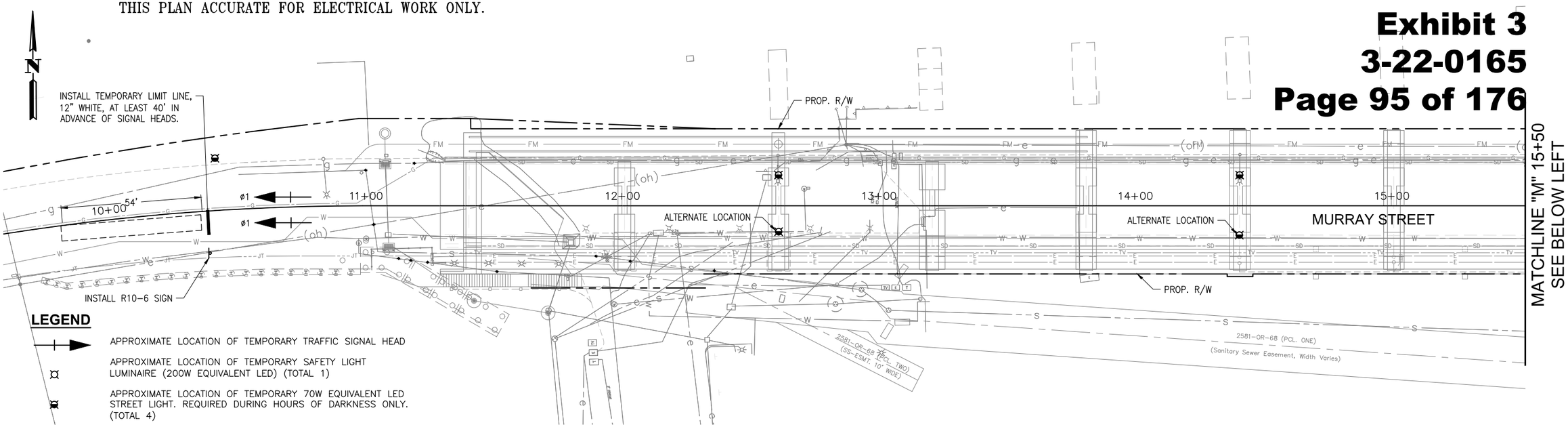

LEGEND

- APPROXIMATE LOCATION OF TEMPORARY TRAFFIC SIGNAL HEAD
- APPROXIMATE LOCATION OF TEMPORARY SAFETY LIGHT LUMINAIRE (200W EQUIVALENT LED) (TOTAL 1)
- APPROXIMATE LOCATION OF TEMPORARY 70W EQUIVALENT LED STREET LIGHT. REQUIRED DURING HOURS OF DARKNESS ONLY. (TOTAL 4)
- ZONE OF DETECTION (VIDEO, RADAR, OR LOOP)

ø1	ALL RED CLEARANCE	ø2	ALL RED CLEARANCE

TEMPORARY PHASE DIAGRAM

FLASHING RED NOT ALLOWED

Know what's **below.** **Call** before you dig.

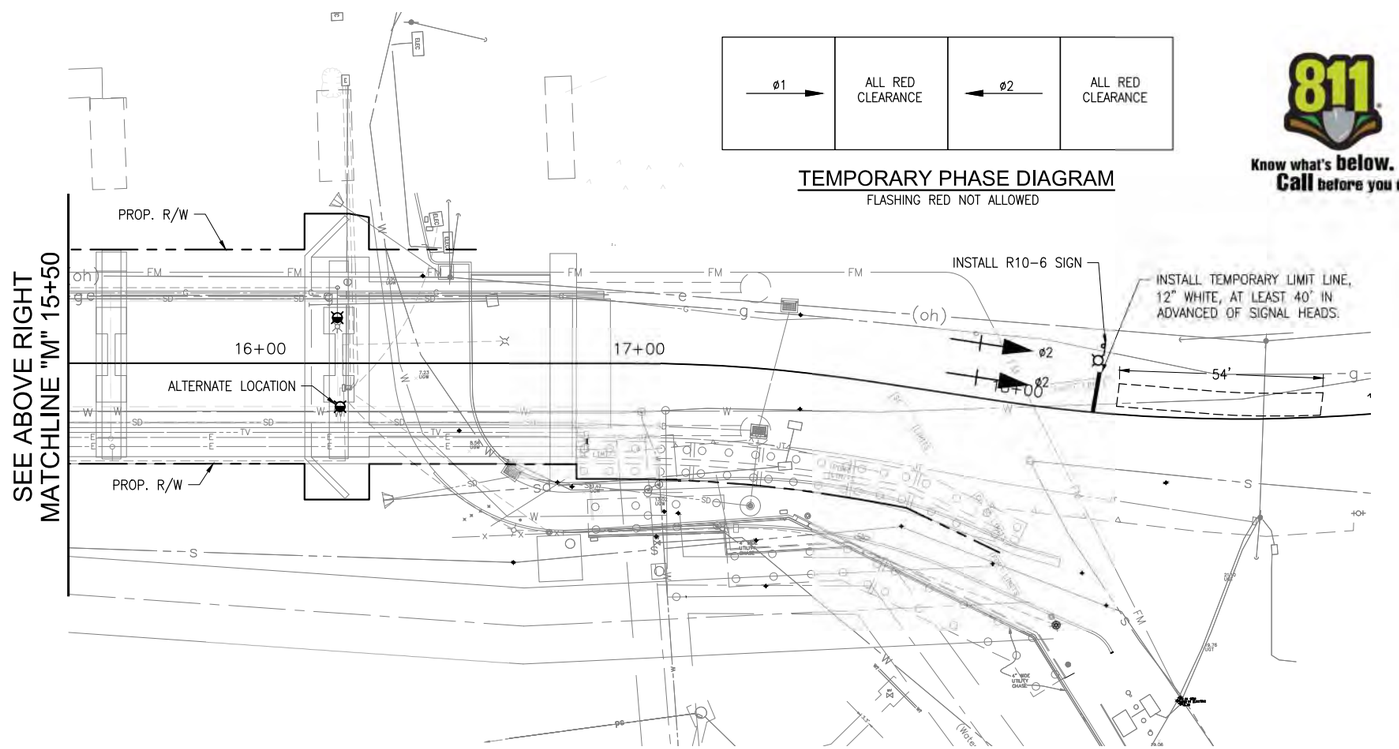

GENERAL NOTES (SHEET E-3)

1. THE CONTRACTOR SHALL BE RESPONSIBLE FOR CONSTRUCTING AND OPERATING TEMPORARY ACTUATED TRAFFIC SIGNAL FACILITIES, AND UTILIZING NEW VEHICLE DETECTION (LOOP, VIDEO, ETC.) TO ALLOW THE INSTALLATION OF SIGNAL SECTIONS AS SHOWN ON THIS PLAN.
2. VEHICLE SIGNAL HEADS SHALL BE MOUNTED AT A MINIMUM HEIGHT OF 17' OVER THE TRAVELED WAY AND 10' ABOVE THE ROAD GRADE IF MOUNTED OUTSIDE THE TRAVELED WAY.
3. CONTRACTOR SHALL SUBMIT PROPOSED TEMPORARY TRAFFIC SIGNAL EQUIPMENT PLAN TO THE CITY FOR REVIEW AND APPROVAL, INCLUDING SIGNAGE CONFORMING TO TYPICAL APPLICATION 12 (TA-12) OF THE CALTRANS MANUAL ON UNIFORM TRAFFIC CONTROL DEVICES.
4. SAWCUTS AND/OR TEMPORARY LOOP DETECTORS SHALL NOT BE INSTALLED IN NEW PAVEMENT.
5. TRAILER-MOUNTED, BARREL-MOUNTED, TEMPORARY WOODEN POST, AND SPAN WIRE ARE ALLOWABLE METHODS FOR TEMPORARY TRAFFIC CONTROL, AT THE CONTRACTOR'S DISCRETION.
6. DESIGN OF ALL TEMPORARY TRAFFIC SIGNAL FACILITIES SHALL BE PERFORMED BY THE CONTRACTOR'S ENGINEER AND SUBMITTED TO THE CITY PER APPROVAL.
7. DESIGN OF TEMPORARY TRAFFIC SIGNALS SHALL CONFORM TO ALL APPLICABLE CALTRANS STANDARDS AND THE CALIFORNIA MANUAL ON UNIFORM TRAFFIC CONTROL DEVICES. IF TEMPORARY WOODEN POLES ARE SELECTED FOR TEMPORARY TRAFFIC SIGNALS, THE INSTALLATION SHALL CONFORM TO CALTRANS STANDARD PLANS ES-18A THROUGH ES-19E.
8. ALL RED INTERVALS SHALL PROVIDE SUFFICIENT TIME FOR VEHICLES TO PASS THROUGH THE CONSTRUCTION AREA. TIMING PLANS SHALL BE PROVIDED TO THE CITY FOR REVIEW AND APPROVAL.
9. TEMPORARY TRAFFIC SIGNAL, SAFETY LIGHTS, AND STREET LIGHTS SHALL BE SOLAR-POWERED. TRAFFIC SIGNALS SHALL BE CAPABLE OF RUNNING 24 HOURS PER DAY WITHOUT INTERRUPTION. FURNISH & INSTALL GENERATOR BACK-UP PER SECTION 12-3.33B(2) CALTRANS STANDARD SPECIFICATIONS. SAFETY LIGHTS AND STREET LIGHTS SHALL RUN DURING HOURS OF DARKNESS AND DO NOT REQUIRE GENERATOR BACK UP. STREET LIGHTS MAY BE MOVED OUT OF THE WORK ZONE DURING WORKING HOURS.
10. TEMPORARY STREET LIGHTS MAY BE MOVED TO THE ALTERNATE LOCATION DEPENDING ON THE LOCATION OF THE WORK ZONE & TRAVEL LANE.
11. TEMPORARY STREET LIGHTS ARE REQUIRED ONLY WHEN THE ADJACENT PERMANENT STREET LIGHT IS NOT FUNCTIONAL.
12. ALL LIGHTING EITHER TEMPORARY OR PERMANENT INSTALLED AS PART OF THE PROJECT SHALL BE HOODED AND ANY ILLUMINATION SHALL BE DIRECTED TO THE GROUND.

95% SUBMITTAL
NOT FOR CONSTRUCTION

E-3

REGISTERED PROFESSIONAL ENGINEER JOHN ROWLAND No. 36953 Exp. 12-31-22 CIVIL STATE OF CALIFORNIA — PRELIMINARY

REGISTERED ENGINEER – CIVIL

PETERS ENGINEERING GROUP or its officers or agents shall not be responsible for the accuracy or completeness of electronic copies of this plan sheet

CITY OF SANTA CRUZ

PREPARED FOR THE
CITY OF SANTA CRUZ
PUBLIC WORKS DEPARTMENT

	BY	CHECKED
DESIGN	M. VERDUZCO	J.ROWLAND
DETAILS	M. VERDUZCO	J.ROWLAND
QUANTITIES		

ORIGINAL SCALE IN INCHES FOR REDUCED PLANS 0 1 2 3

PETERS ENGINEERING GROUP
862 POLLASKY AVENUE
CLOVIS, CALIFORNIA 93612
PHONE (559) 299-1544

BRIDGE NO. 36C0108
CONTRACT NO.
EA NO.

MURRAY STREET BRIDGE
SEISMIC RETROFIT AND BARRIER REPLACEMENT
TEMPORARY TRAFFIC SIGNAL PLAN

DISREGARD PRINTS BEARING EARLIER REVISION DATES

REVISION DATES (PRELIMINARY STAGE ONLY)

SCALE 1"=20'
SHEET 97 of 167
VAULT NO. XXXXXXX

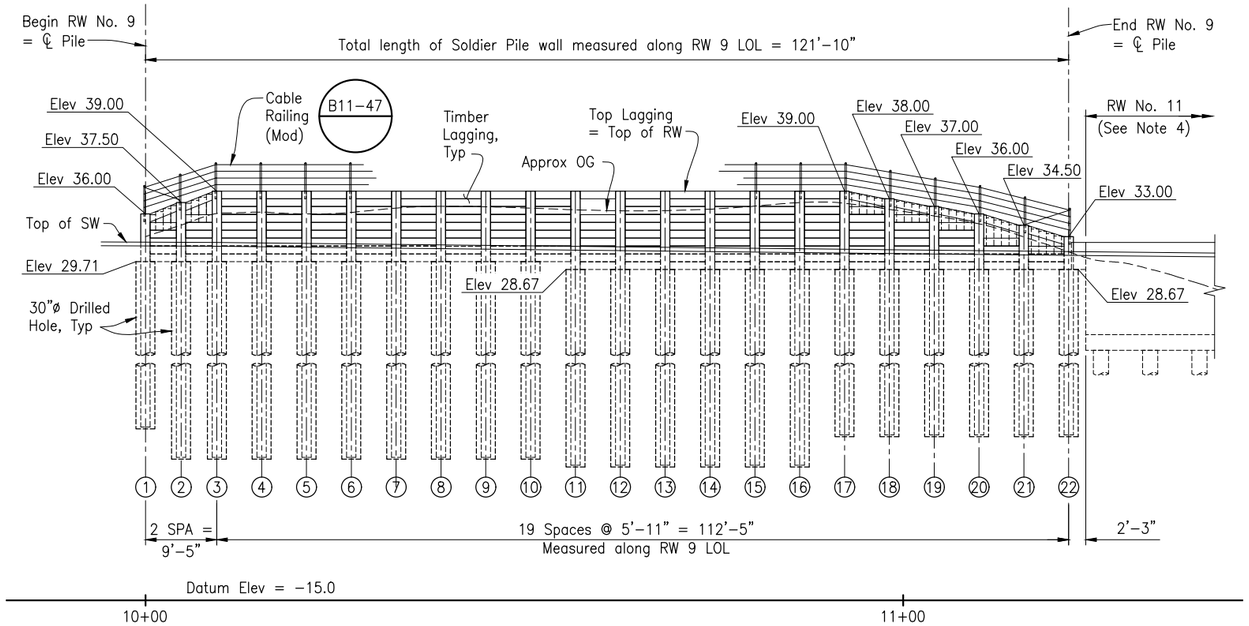

DEVELOPED MIRRORED ELEVATION

1"=10'

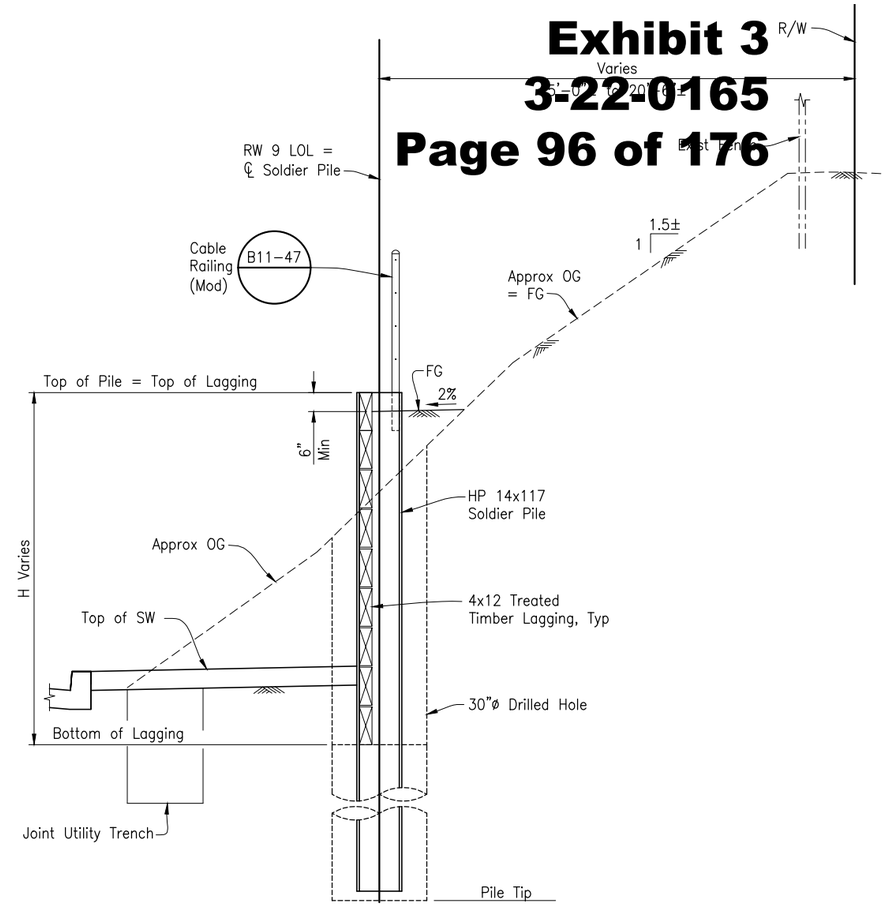

TYPICAL SECTION

½"=1'-0"

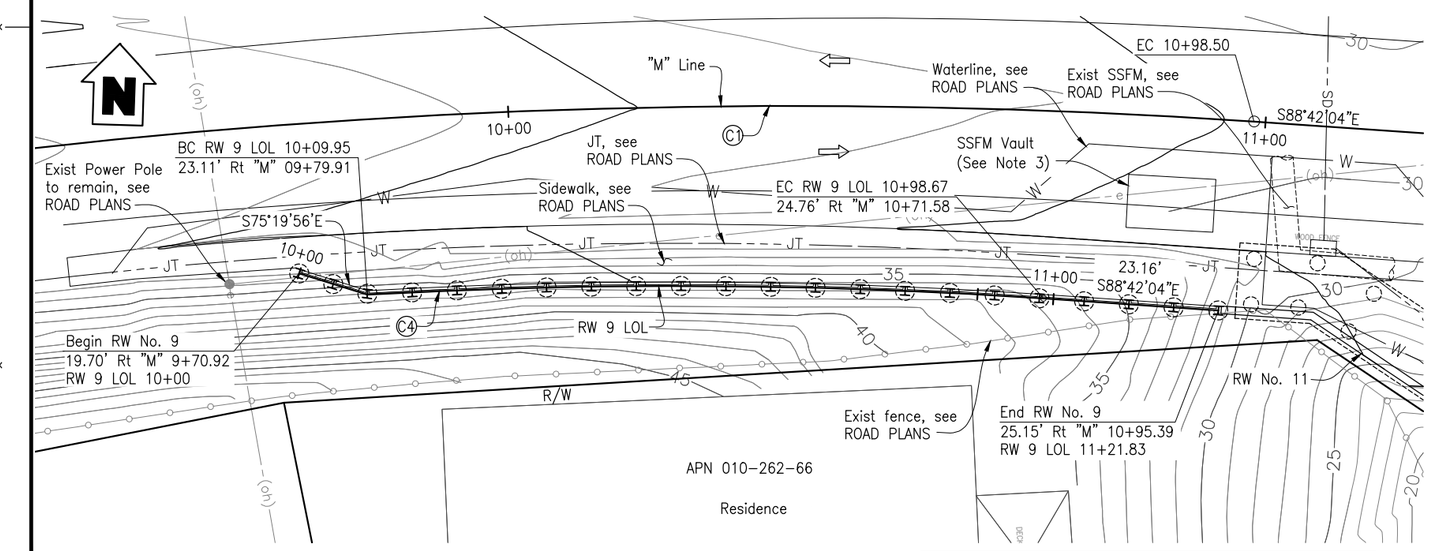

PLAN

1"=10'

CURVE DATA				
NO	R	Δ	T	L
C1	900.00'	15°03'38"	118.97'	236.57'
C4	716.80'	07°08'05"	44.69'	89.26'

INDEX TO PLANS

SHEET NO.	TITLE
1.	RETAINING WALL NO. 9 LAYOUT
2.	RETAINING WALL NO. 9 DETAILS NO. 1
3.	RETAINING WALL NO. 9 DETAILS NO. 2
4.	RETAINING WALL NO. 9 DETAILS NO. 3
5.	SOLDIER PILE WALL LAGGING DETAILS

QUANTITIES

STRUCTURE EXCAVATION (SOLDIER PILE WALL)	69 CY
STRUCTURE BACKFILL (SOLDIER PILE WALL)	19 CY
CONCRETE BACKFILL (SOLDIER PILE WALL)	116 CY
LEAN CONCRETE BACKFILL	30 CY
STEEL SOLDIER PILE (HP 14x117)	833 LF
30"ø DRILLED HOLE	836 LF
TIMBER LAGGING	3.9 MFBM
CLEAN AND PAINT STEEL SOLDIER STEEL	1 LS
CHAIN LINK RAILING (MODIFIED)	124 LF

NOTES:

1. The Contractor shall field locate all utilities in vicinity of wall prior to wall construction.
2. Utilities to remain shall be protected in place, see Utility Plans.
3. For Sanitary Sewer Force Main (SSFM) details, see SANITARY SEWER PLANS.
4. Construction of RW No. 11 must be complete prior to beginning construction of RW No. 9.

LEGEND:

(I) Indicates 30"ø Drilled Hole

⇦ Indicates Direction of Traffic

100% SUBMITTAL NOT FOR CONSTRUCTION

NOTE:
THE CONTRACTOR SHALL VERIFY ALL CONTROLLING FIELD DIMENSIONS BEFORE ORDERING OR FABRICATING ANY MATERIAL.

RW-1

REGISTERED PROFESSIONAL ENGINEER — CAMERON PINKERTON — No. C 69531 — CIVIL — STATE OF CALIFORNIA — REGISTERED ENGINEER – CIVIL

TRC Engineers or its officers or agents shall not be responsible for the accuracy or completeness of electronic copies of this plan sheet

CITY OF SANTA CRUZ

PREPARED FOR THE
CITY OF SANTA CRUZ
PUBLIC WORKS DEPARTMENT

DESIGN	BY B. SCHOPPE	CHECKED G. ANGEL-ZARAGOZA
DETAILS	BY G. IMBSEN	CHECKED G. ANGEL-ZARAGOZA
QUANTITIES	BY G. ANGEL-ZARAGOZA	CHECKED C. PINKERTON

ORIGINAL SCALE IN INCHES FOR REDUCED PLANS 0 1 2 3

TRC
MARK IMBRIANI
PROJECT MANAGER

BRIDGE NO. 36C0108
CONTRACT NO.
EA NO.

MURRAY STREET BRIDGE
SEISMIC RETROFIT AND BARRIER REPLACEMENT
RETAINING WALL NO. 9 LAYOUT

DISREGARD PRINTS BEARING EARLIER REVISION DATES → REVISION DATES (PRELIMINARY STAGE ONLY) 7-24-15 10-23-15 6-23-21 9-17-21

SCALE AS SHOWN
SHEET 98 OF 167
VAULT NO. XXXXXXX

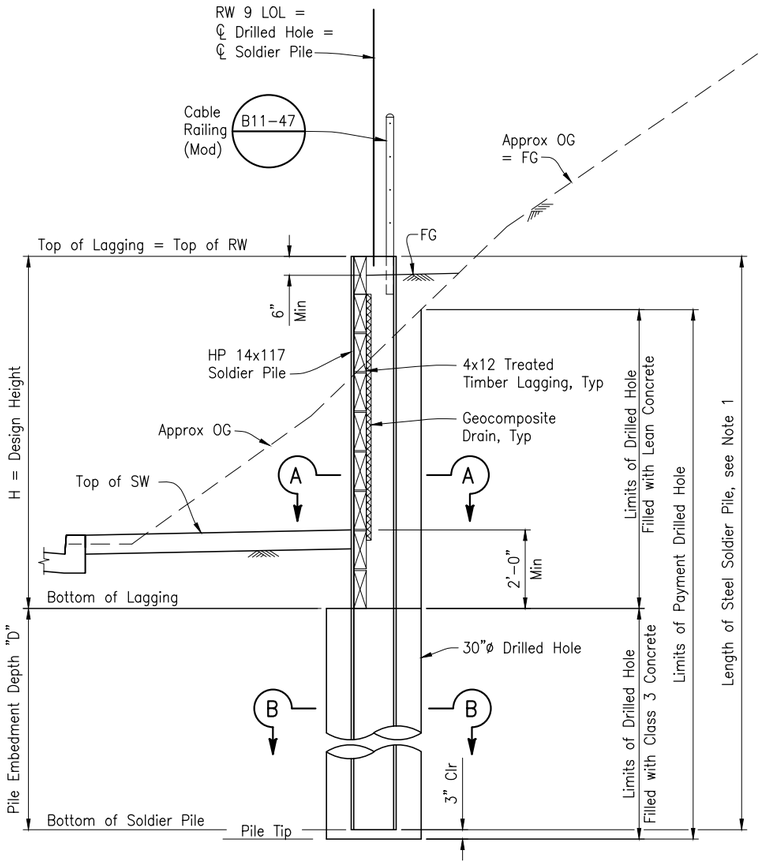

TYPICAL SECTION

½"=1'–0"

RETAINING WALL DATA TABLE

PILE No.	PILE EMBEDMENT DEPTH "D" (feet)
1	26
2	30
3	30
4	30
5	30
6	30
7	30
8	30
9	30
10	30
11	30
12	30
13	30
14	30
15	30
16	30
17	26
18	26
19	26
20	22
21	22
22	22

GENERAL NOTES:

DESIGN: AASHTO LRFD Bridge Design Specifications, 4th Edition with California Amendments.

LIVE LOAD: 240 psf equivalent to 2 feet soil weight.

SOIL PARAMETERS: Active Static Equivalent Fluid Pressure = 90 lb/ft³

SEISMIC PARAMETERS: Active Seismic Equivalent Fluid Pressure = 26lb/ft³

STEEL SOLDIER PILES: ASTM A572/A, ASTM 572M Grade 50 Min, or ASTM A36/A36M.

REINFORCED CONCRETE (CAP & CIP WALL): f'c = 4000 psi, fy = 60 ksi

STRUCTURAL TIMBER: Treated Douglas Fir, Grade No. 1 or better to be full sawn.

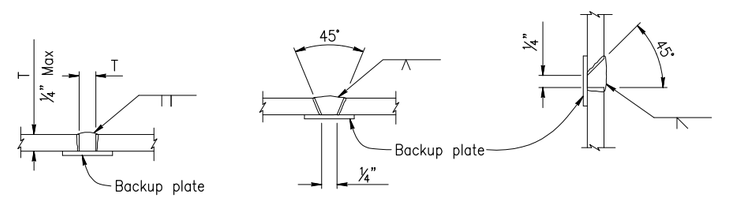

SQUARE GROOVE | SINGLE VEE-GROOVE | SINGLE BEVEL-GROOVE

NOTES:
1. Single vee–groove and square groove permitted for all positions.
2. Single bevel–groove permitted for horizontal joints only.

PILE WELDING DETAIL-BUTT JOINTS

NO SCALE

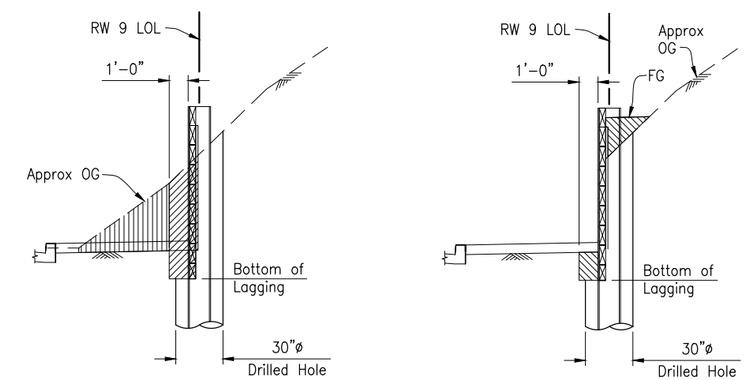

EXCAVATION | BACKFILL

LEGEND:
- Indicates Structure Excavation
- Indicates Roadway Excavation
- Indicates Structure Backfill

LIMITS OF PAYMENT FOR EXCAVATION AND BACKFILL

¼"=1'–0"

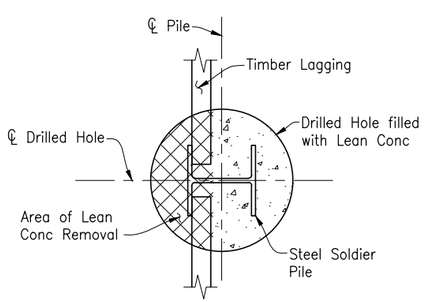

SECTION A-A

¾"=1'–0"

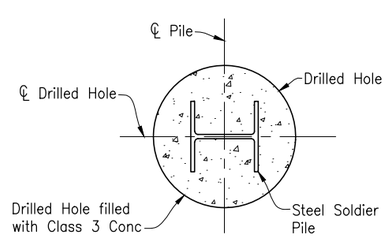

SECTION B-B

¾"=1'–0"

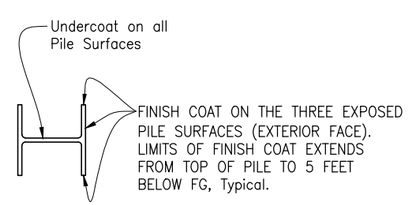

LIMITS OF CLEAN & PAINT STEEL SOLDIER PILE

NO SCALE

NOTES:

1. Clean and paint Steel Soldier Pile from top to 5 feet, Min below bottom of lagging.

NOTE:
THE CONTRACTOR SHALL VERIFY ALL CONTROLLING FIELD DIMENSIONS BEFORE ORDERING OR FABRICATING ANY MATERIAL.

100% SUBMITTAL NOT FOR CONSTRUCTION

RW-2

REGISTERED PROFESSIONAL ENGINEER — CAMERON PINKERTON — No. C 70051 — 31-22 — CIVIL — STATE OF CALIFORNIA

REGISTERED ENGINEER – CIVIL

TRC Engineers or its officers or agents shall not be responsible for the accuracy or completeness of electronic copies of this plan sheet

CITY OF SANTA CRUZ

PREPARED FOR THE CITY OF SANTA CRUZ PUBLIC WORKS DEPARTMENT

	BY	CHECKED
DESIGN	B. SCHOPPE	G. ANGEL–ZARAGOZA
DETAILS	G. IMBSEN	G. ANGEL–ZARAGOZA
QUANTITIES	G. ANGEL–ZARAGOZA	C. PINKERTON

ORIGINAL SCALE IN INCHES FOR REDUCED PLANS 0 1 2 3

TRC — MARK IMBRIANI, PROJECT MANAGER

BRIDGE NO. 36C0108
CONTRACT NO.
EA NO.

MURRAY STREET BRIDGE
SEISMIC RETROFIT AND BARRIER REPLACEMENT
RETAINING WALL NO. 9 DETAILS NO. 1

DISREGARD PRINTS BEARING EARLIER REVISION DATES — REVISION DATES (PRELIMINARY STAGE ONLY): 7-01-15, 10-23-15, 6-23-21, 9-21-21

SCALE AS SHOWN
SHEET 99 OF 167
VAULT NO. XXXXXXX

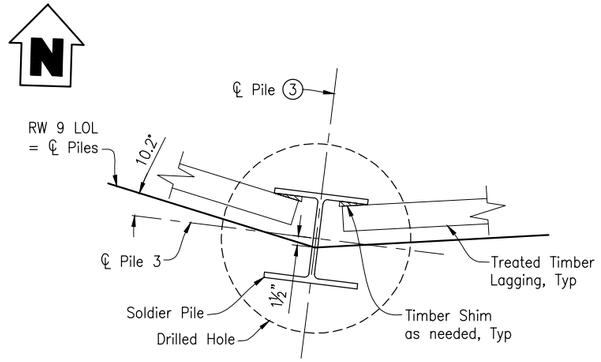

PILE 3 PLAN
1"=1'-0"

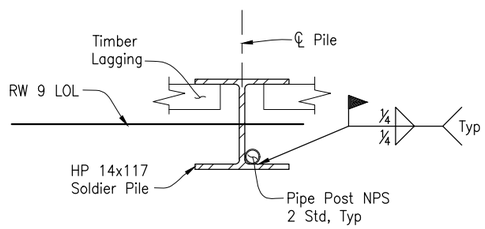

SECTION A-A

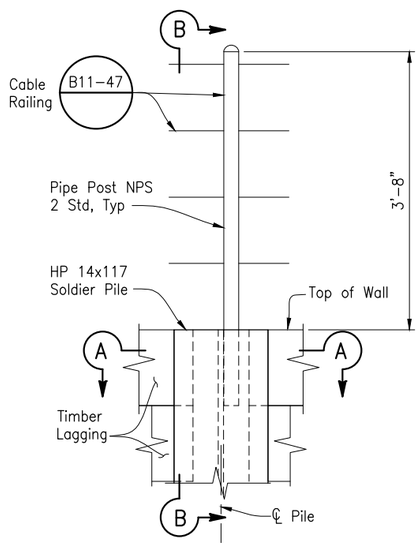

PARTIAL ELEVATION

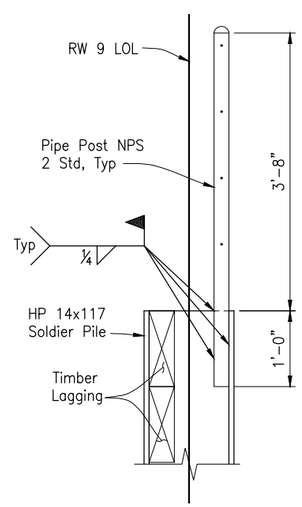

SECTION B-B

Mod CABLE RAILING DETAILS
1"=1'-0"

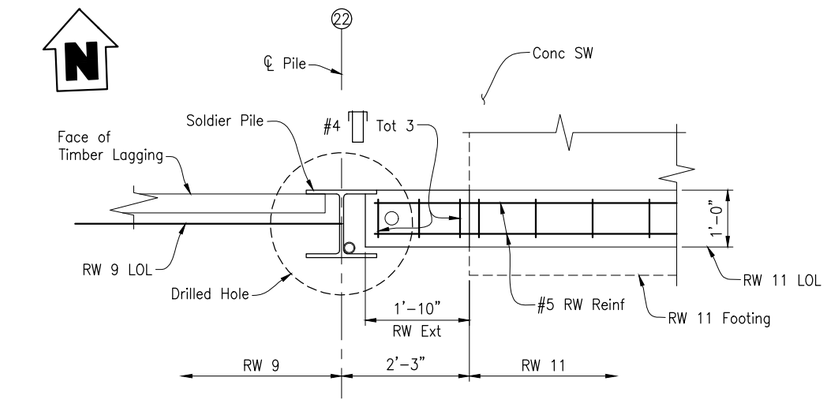

PARTIAL PLAN

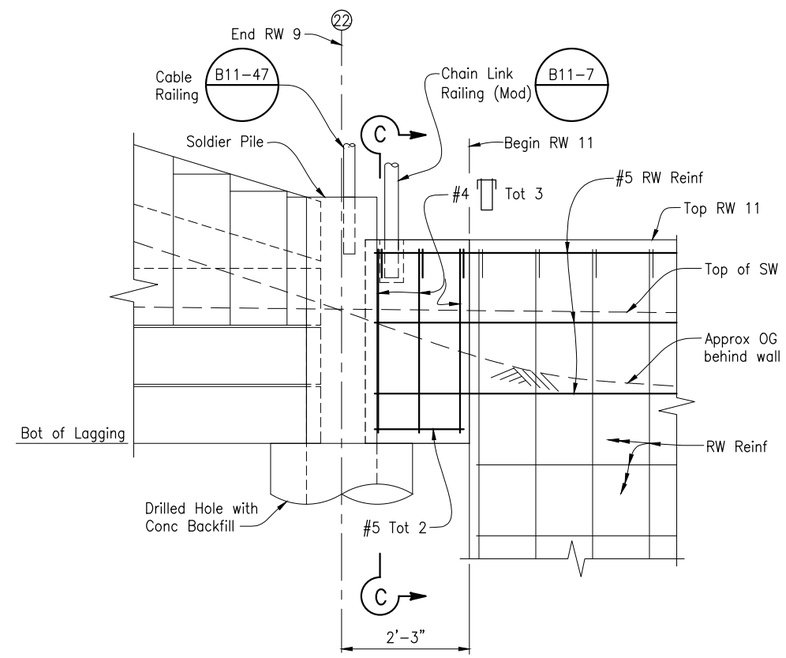

PARTIAL ELEVATION

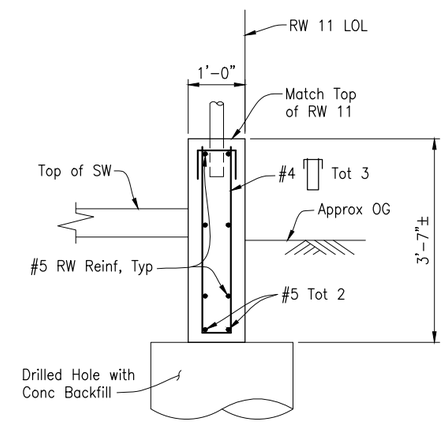

SECTION C-C

RW EXTENSION DETAILS
¾"=1'-0"

NOTE:
THE CONTRACTOR SHALL VERIFY ALL CONTROLLING FIELD DIMENSIONS BEFORE ORDERING OR FABRICATING ANY MATERIAL.

100% SUBMITTAL
NOT FOR CONSTRUCTION

RW-3

REGISTERED PROFESSIONAL ENGINEER
CAMERON PINKERTON
No. 36C0108
Exp. 3-31-22
CIVIL
STATE OF CALIFORNIA

REGISTERED ENGINEER – CIVIL

TRC Engineers or its officers or agents shall not be responsible for the accuracy or completeness of electronic copies of this plan sheet

CITY OF SANTA CRUZ

PREPARED FOR THE
CITY OF SANTA CRUZ
PUBLIC WORKS DEPARTMENT

DESIGN	BY B. SCHOPPE	CHECKED G. ANGEL-ZARAGOZA
DETAILS	BY G. IMBSEN	CHECKED G. ANGEL-ZARAGOZA
QUANTITIES	BY G. ANGEL-ZARAGOZA	CHECKED C. PINKERTON

ORIGINAL SCALE IN INCHES FOR REDUCED PLANS 0 1 2 3

TRC
MARK IMBRIANI
PROJECT MANAGER

BRIDGE NO. 36C0108
CONTRACT NO.
EA NO.

MURRAY STREET BRIDGE
SEISMIC RETROFIT AND BARRIER REPLACEMENT
RETAINING WALL NO. 9 DETAILS NO. 2

DISREGARD PRINTS BEARING EARLIER REVISION DATES
REVISION DATES (PRELIMINARY STAGE ONLY)
7-01-15 10-21-15 6-23-21 9-29-21

SCALE AS SHOWN
SHEET 100 OF 167
VAULT NO. XXXXXXX

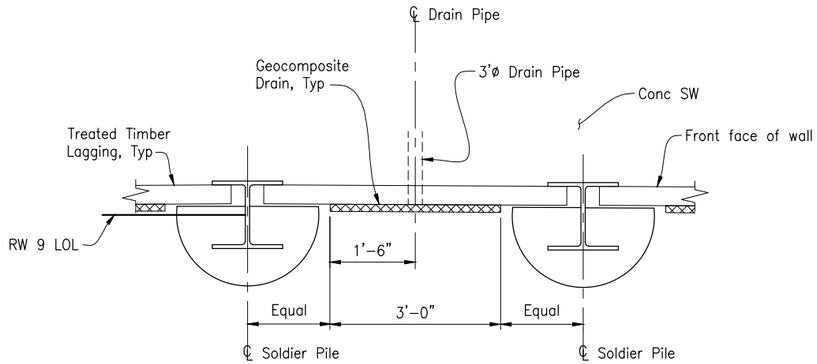

PARTIAL PLAN

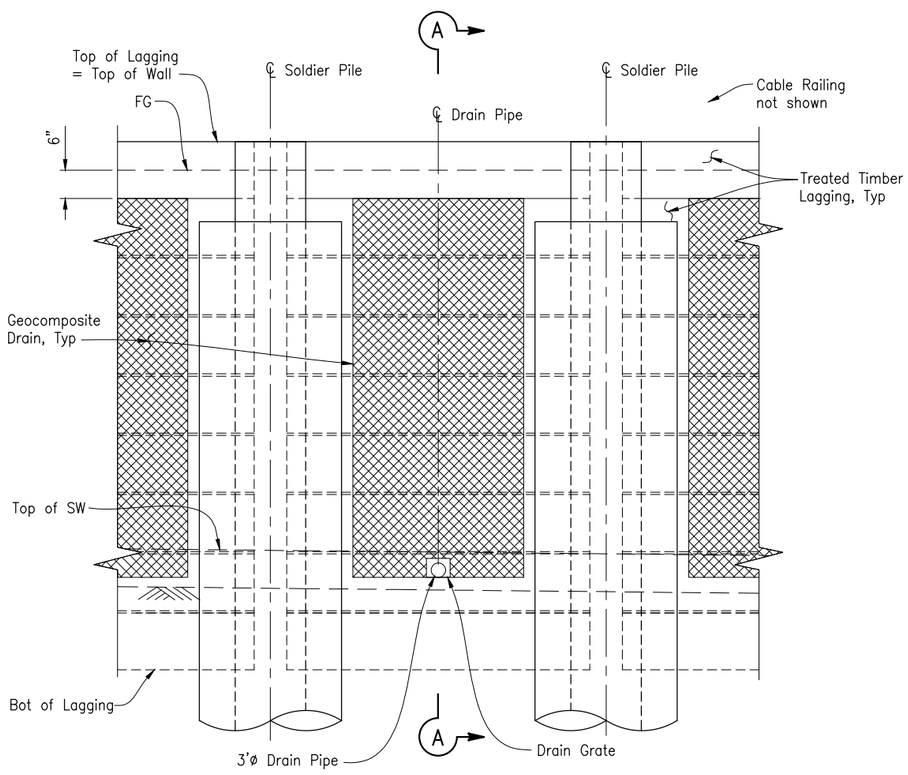

PARTIAL ELEVATION

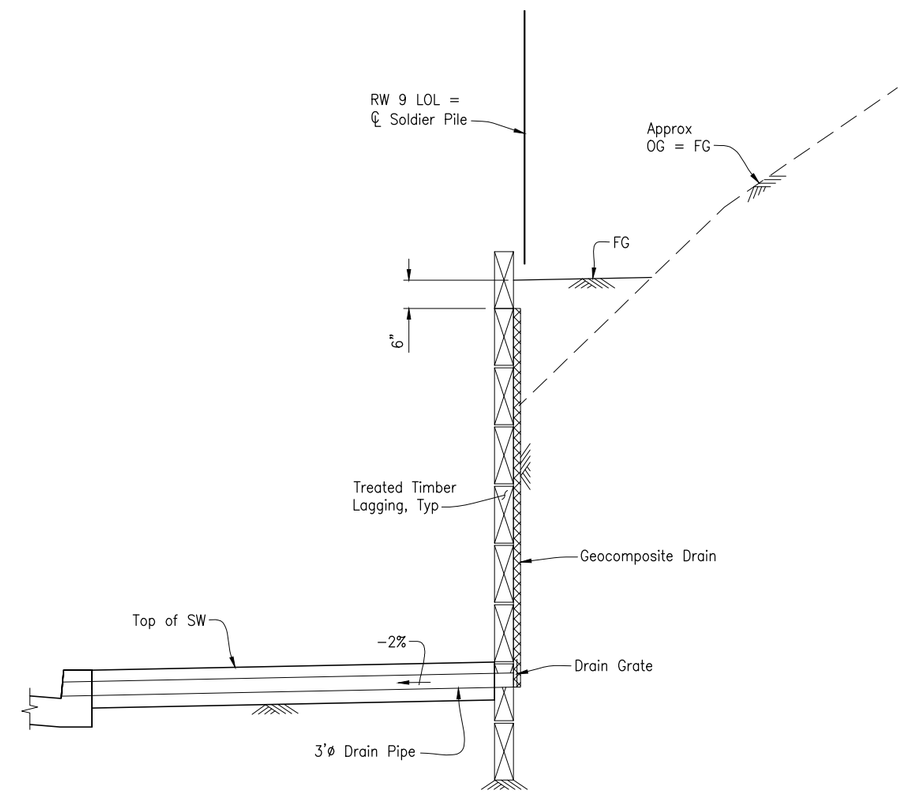

SECTION A-A

NOTE:
THE CONTRACTOR SHALL VERIFY ALL CONTROLLING FIELD DIMENSIONS BEFORE ORDERING OR FABRICATING ANY MATERIAL.

GEOCOMPOSITE DRAIN DETAILS

¾"=1'-0"

100% SUBMITTAL
NOT FOR CONSTRUCTION

RW-4

REGISTERED PROFESSIONAL ENGINEER CAMERON PINKERTON No. 76756 Exp. 6-31-22 CIVIL STATE OF CALIFORNIA

REGISTERED ENGINEER – CIVIL

TRC Engineers or its officers or agents shall not be responsible for the accuracy or completeness of electronic copies of this plan sheet

CITY OF SANTA CRUZ

PREPARED FOR THE
CITY OF SANTA CRUZ
PUBLIC WORKS DEPARTMENT

DESIGN	BY B. SCHOPPE	CHECKED G. ANGEL-ZARAGOZA
DETAILS	BY G. IMBSEN	CHECKED G. ANGEL-ZARAGOZA
QUANTITIES	BY G. ANGEL-ZARAGOZA	CHECKED C. PINKERTON

ORIGINAL SCALE IN INCHES FOR REDUCED PLANS 0 1 2 3

TRC
MARK IMBRIANI
PROJECT MANAGER

BRIDGE NO. 36C0108
CONTRACT NO.
EA NO.

MURRAY STREET BRIDGE
SEISMIC RETROFIT AND BARRIER REPLACEMENT
RETAINING WALL NO. 9 DETAILS NO. 3

DISREGARD PRINTS BEARING EARLIER REVISION DATES → REVISION DATES (PRELIMINARY STAGE ONLY) 7-01-15 10-21-15 6-23-21 9-21-21

SCALE AS SHOWN
SHEET 101 OF 167
VAULT NO. XXXXXXX

DIST	COUNTY	ROUTE	POST MILES TOTAL PROJECT	SHEET No.	TOTAL SHEETS
05	SCr				

REGISTERED CIVIL ENGINEER DATE

PLANS APPROVAL DATE

REGISTERED PROFESSIONAL ENGINEER CAMERON J. PINKERT No. 73[illegible] Exp. 12-31-22 CIVIL STATE OF CALIFORNIA

DRAFT

The State of California or its officers or agents shall not be responsible for the accuracy or completeness of scanned copies of this plan sheet.

The Registered Civil Engineer for the project is responsible for the selection and proper application of the component design and any modifications shown.

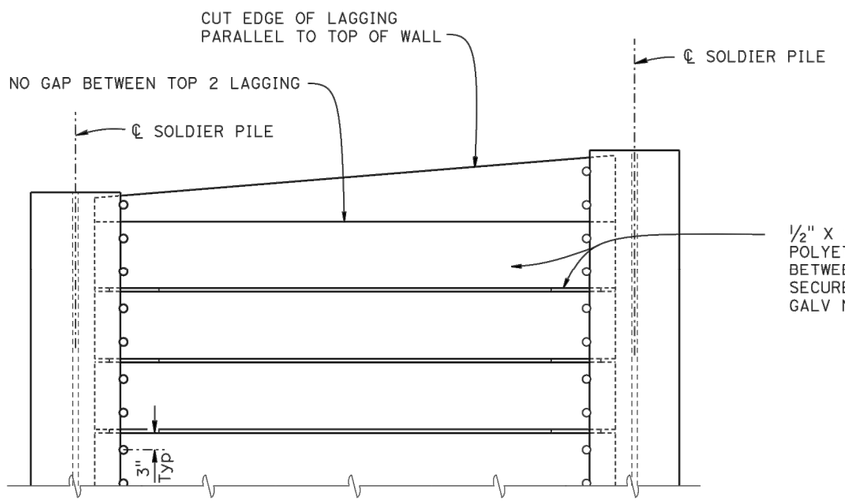

PART ELEVATION

LAGGING DETAILS (ALTERNATIVE 1)

NO SCALE

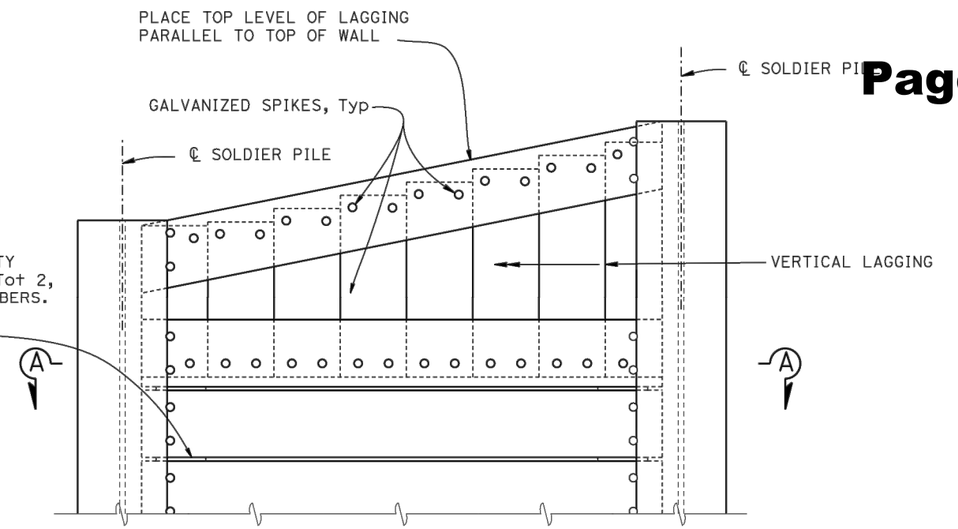

PART ELEVATION

LAGGING DETAILS (ALTERNATIVE 2)

NO SCALE

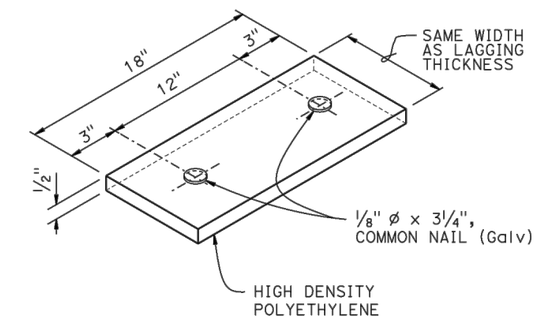

SHIM DETAIL

NO SCALE

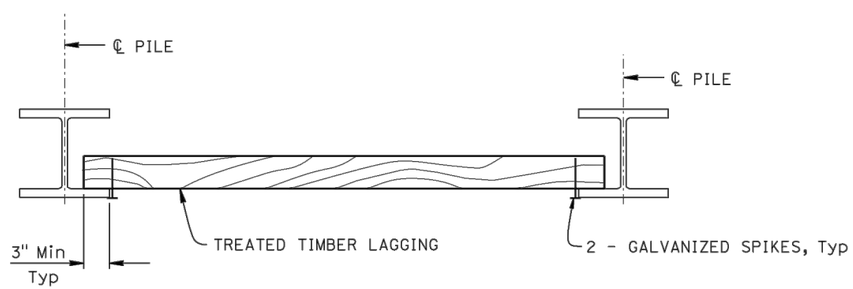

PART PLAN

NO SCALE

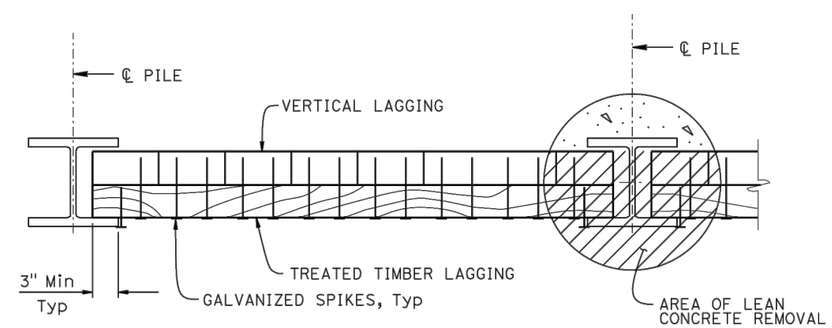

SECTION A-A

NO SCALE

NOTES:

1. No clipping of timber lagging corners allowed
2. Use 16d Galv wire spikes for 4 x 12 lagging, and 40d Galv wire spikes for 6 x 12 lagging
3. Spikes shall not be bent

100% SUBMITTAL
NOT FOR CONSTRUCTION

SPECIAL DETAILS RW-5

BRIDGE STANDARD DETAILS

xs12-080	July 2014	The components of the Bridge Standard Details have been prepared under the responsible charge of the Technical Owner, a registered civil engineer in the State of California
FILE NO.	APPROVAL DATE	

Refer to: http://www.dot.ca.gov/hq/esc/techpubs/manual/bridgemanuals/bridge-standard-detail-sheets/index.html

FILE => xs12-080.dgn
USERNAME => s136236 TIME PLOTTED => 16:02 DATE PLOTTED => 14-JUL-2016

ORIGINAL SCALE IN INCHES FOR REDUCED PLANS 0 1 2 3

STATE OF CALIFORNIA
DEPARTMENT OF TRANSPORTATION

DIVISION OF ENGINEERING SERVICES

BRIDGE NO. 36C0108
POST MILE

MURRAY STREET BRIDGE
SEISMIC RETROFIT AND BARRIER REPLACEMENT

SOLDIER PILE WALL LAGGING DETAILS

UNIT:
PROJECT NUMBER & PHASE:
CONTRACT NO.:

DISREGARD PRINTS BEARING EARLIER REVISION DATES

REVISION DATES 6-24-14 7-12-16

SHEET 102 OF 167

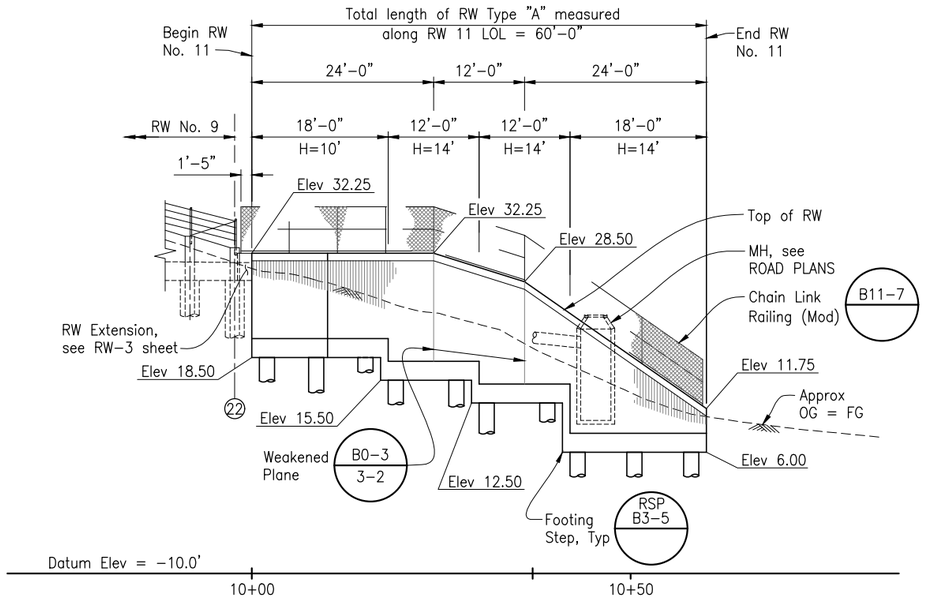

DEVELOPED ELEVATION

1"=10'-0"

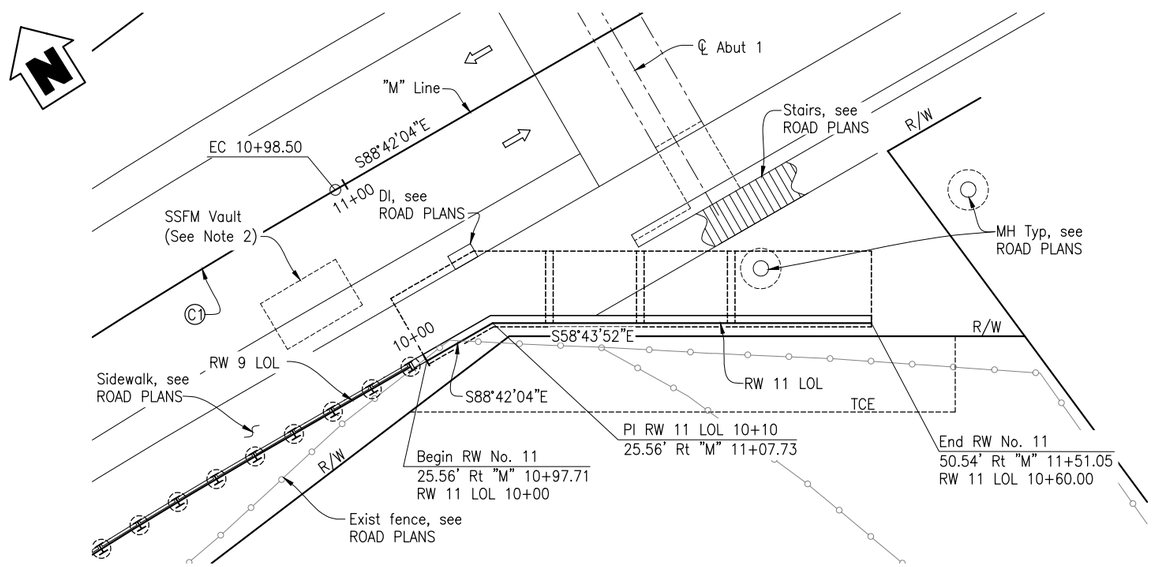

PLAN

1"=10'-0"

CURVE DATA				
NO	R	Δ	T	L
C1	900.00'	15°03'38"	118.97'	236.57'

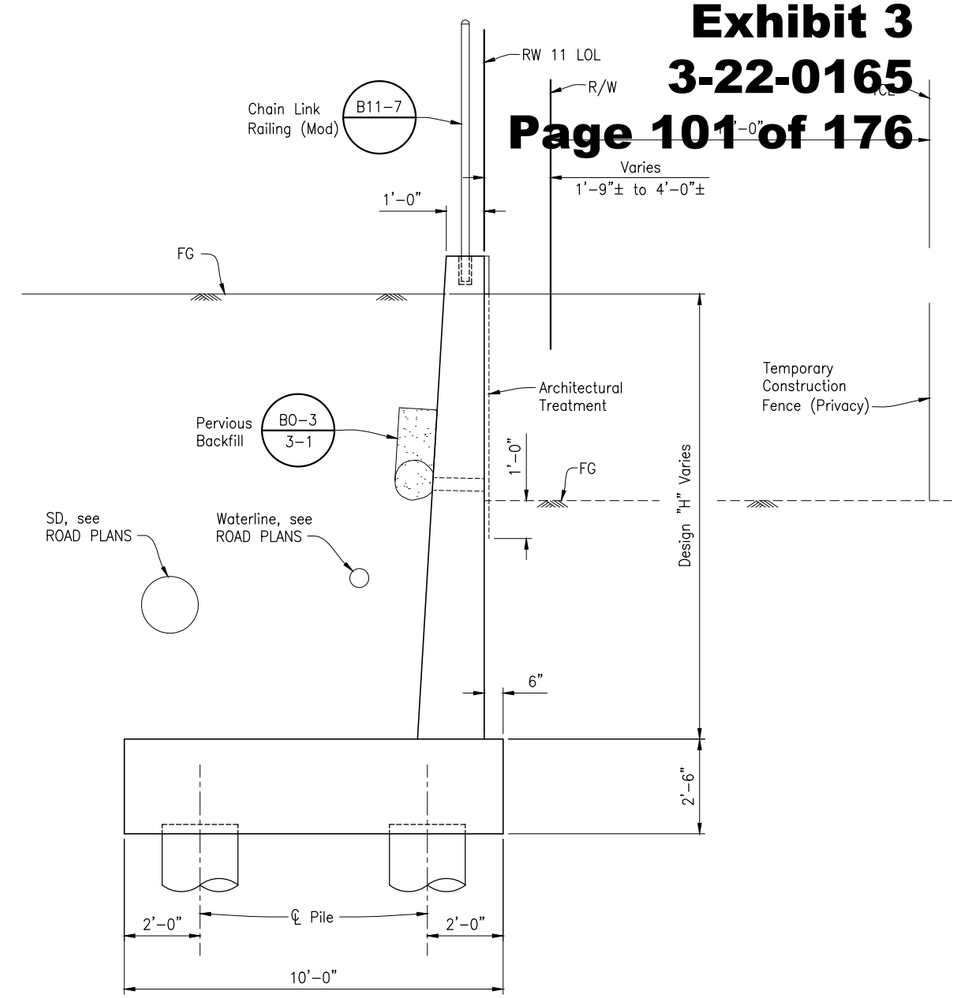

TYPE "A" RW
TYPICAL SECTION

½"=1'-0"

QUANTITIES

STRUCTURE EXCAVATION (RETAINING WALL)	245	CY
STRUCTURE BACKFILL (RETAINING WALL)	253	CY
FURNISH 24" CAST-IN-STEEL SHELL CONCRETE PILING	774	EA
DRIVE 24" CAST-IN-STEEL SHELL CONCRETE PILING	20	EA
STRUCTURE CONCRETE, RETAINING WALL	92	CY
ARCHITECTURAL TREATMENT	363	SQFT
BAR REINFORCING STEEL (RETAINING WALL)	22,404	LB
CHAIN LINK RAILING (MODIFIED)	60	LF

NOTES:

1. For "DESIGN DATA" and details for Type "A" RW, see "RETAINING WALL TYPE A DETAILS" sheet.
2. For Sanitary Sewer Force Main (SSFM) details, see SANITARY SEWER PLANS.

LEGEND:

⇦ Indicates Direction of Traffic

NOTE:
THE CONTRACTOR SHALL VERIFY ALL CONTROLLING FIELD DIMENSIONS BEFORE ORDERING OR FABRICATING ANY MATERIAL.

100% SUBMITTAL NOT FOR CONSTRUCTION

RW-6

REGISTERED PROFESSIONAL ENGINEER CAMERON PINKERTON No. C 51-22 CIVIL STATE OF CALIFORNIA — REGISTERED ENGINEER – CIVIL

TRC Engineers or its officers or agents shall not be responsible for the accuracy or completeness of electronic copies of this plan sheet

CITY OF SANTA CRUZ

PREPARED FOR THE CITY OF SANTA CRUZ PUBLIC WORKS DEPARTMENT

	BY	CHECKED
DESIGN	C. PINKERTON	M. PUROHIT
DETAILS	G. IMBSEN	M. PUROHIT
QUANTITIES	C. PINKERTON	M. PUROHIT

ORIGINAL SCALE IN INCHES FOR REDUCED PLANS 0 1 2 3

TRC
MARK IMBRIANI
PROJECT MANAGER

BRIDGE NO. 36C0108
CONTRACT NO.
EA NO.

MURRAY STREET BRIDGE
SEISMIC RETROFIT AND BARRIER REPLACEMENT
RETAINING WALL NO. 11 LAYOUT

DISREGARD PRINTS BEARING EARLIER REVISION DATES — REVISION DATES (PRELIMINARY STAGE ONLY) 7-08-15 10-23-15 8-06-21

SCALE AS SHOWN
SHEET 103 OF 167
VAULT NO. XXXXXXX

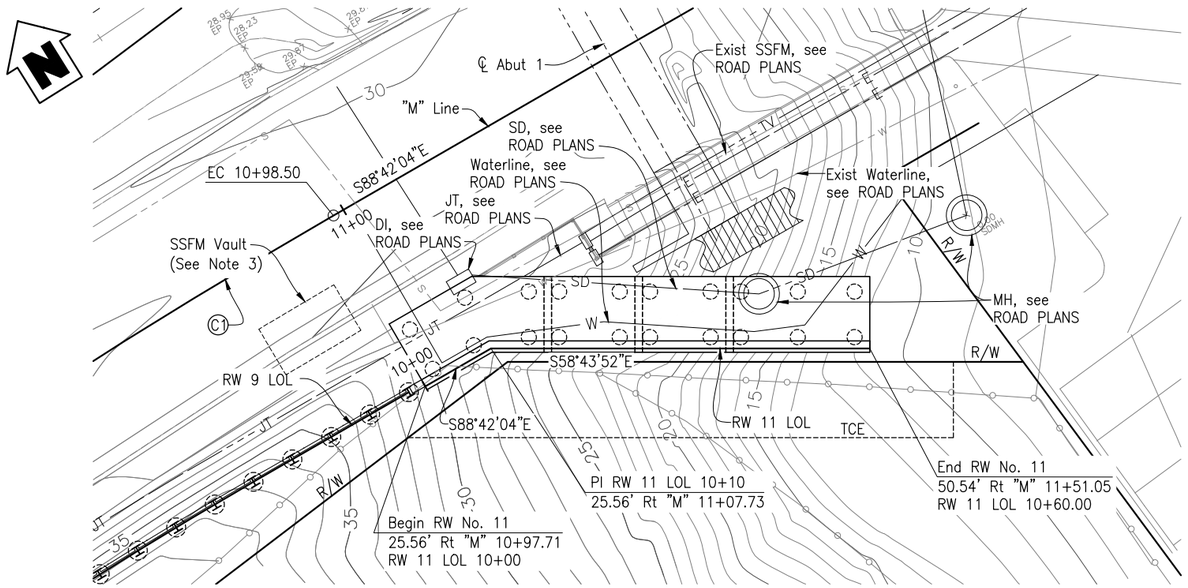

FOUNDATION PLAN
1"=10'

LEGEND:

◌ Indicates 24"ø CISS Piling

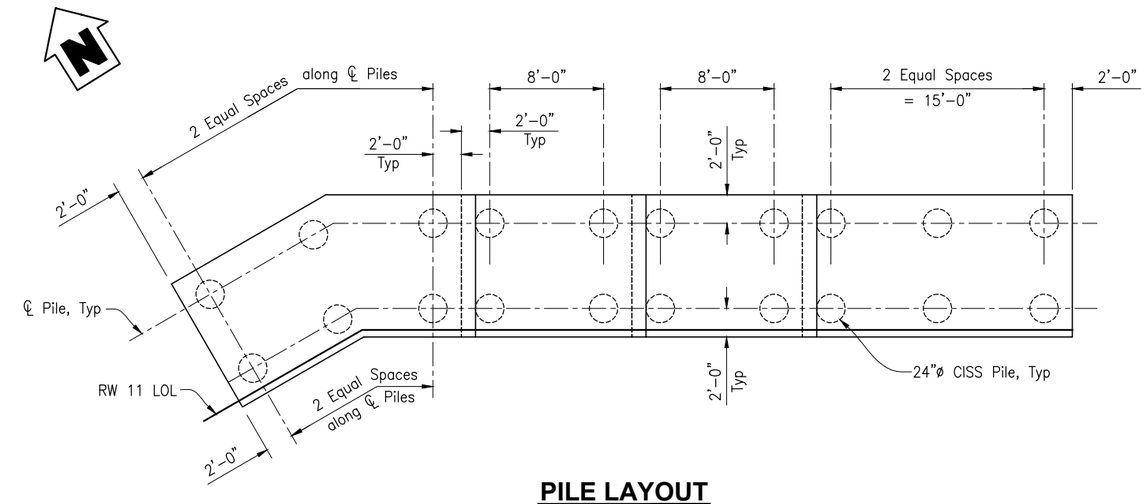

PILE LAYOUT
3/16"=1'-0"

PILE DATA TABLE

DESIGN HEIGHT	PILE TYPE	NOMINAL RESISTANCE (kips)		DESIGN TIP ELEVATIONS (ft)	SPECIFIED TIP ELEVATIONS (ft)	NOMINAL DRIVING RESISTANCE (kips)
		COMPRESSION	TENSION			
H=10'	CISS NPS 24x0.5	150	0	−11 (a), −15 (d)	−14	150
H=14'	CISS NPS 24x0.5	210	10	−22 (a), 1 (b), −23 (d)	−23	210
H=14'	CISS NPS 24x0.5	210	10	−28 (a), −4 (b), −24 (d)	−28	210
H=14'	CISS NPS 24x0.5	210	10	−37 (a), −12 (b), −30 (d)	−37	210

Notes:
1. Design tip elevations are controlled by a) Compression, b) Tension, d) Lateral load.
2. The Specified Tip elevation shall not be raised above the design tip elevations for tension load, lateral load, and tolerable settlement.
3. Unsuitable soil layers (very, soft, liquefiable, scourable, etc.) that do not contribute to the nominal resistance exist at all support locations.

NOTES:

1. The Contractor shall field locate all utilities in vicinity of wall prior to wall construction.
2. Utilities to remain shall be protected in place, see ROAD PLANS.
3. For Sanitary Sewer Force Main (SSFM) details, see SANITARY SEWER PLANS.

NOTE:
THE CONTRACTOR SHALL VERIFY ALL CONTROLLING FIELD DIMENSIONS BEFORE ORDERING OR FABRICATING ANY MATERIAL.

100% SUBMITTAL NOT FOR CONSTRUCTION

RW-7

REGISTERED PROFESSIONAL ENGINEER CAMERON PINKERTON No. 81-22 CIVIL STATE OF CALIFORNIA
REGISTERED ENGINEER – CIVIL
TRC Engineers or its officers or agents shall not be responsible for the accuracy or completeness of electronic copies of this plan sheet

CITY OF SANTA CRUZ
PREPARED FOR THE CITY OF SANTA CRUZ PUBLIC WORKS DEPARTMENT

	BY	CHECKED
DESIGN	C. PINKERTON	M. PUROHIT
DETAILS	G. IMBSEN	M. PUROHIT
QUANTITIES	C. PINKERTON	M. PUROHIT

ORIGINAL SCALE IN INCHES FOR REDUCED PLANS 0 1 2 3

TRC
MARK IMBRIANI
PROJECT MANAGER

BRIDGE NO. 36C0108
CONTRACT NO.
EA NO.

MURRAY STREET BRIDGE
SEISMIC RETROFIT AND BARRIER REPLACEMENT
RETAINING WALL NO. 11 DETAILS

DISREGARD PRINTS BEARING EARLIER REVISION DATES → 7-24-15 10-23-15 8-06-21
REVISION DATES (PRELIMINARY STAGE ONLY)

SCALE AS SHOWN
SHEET 104 OF 167
VAULT NO. XXXXXXX

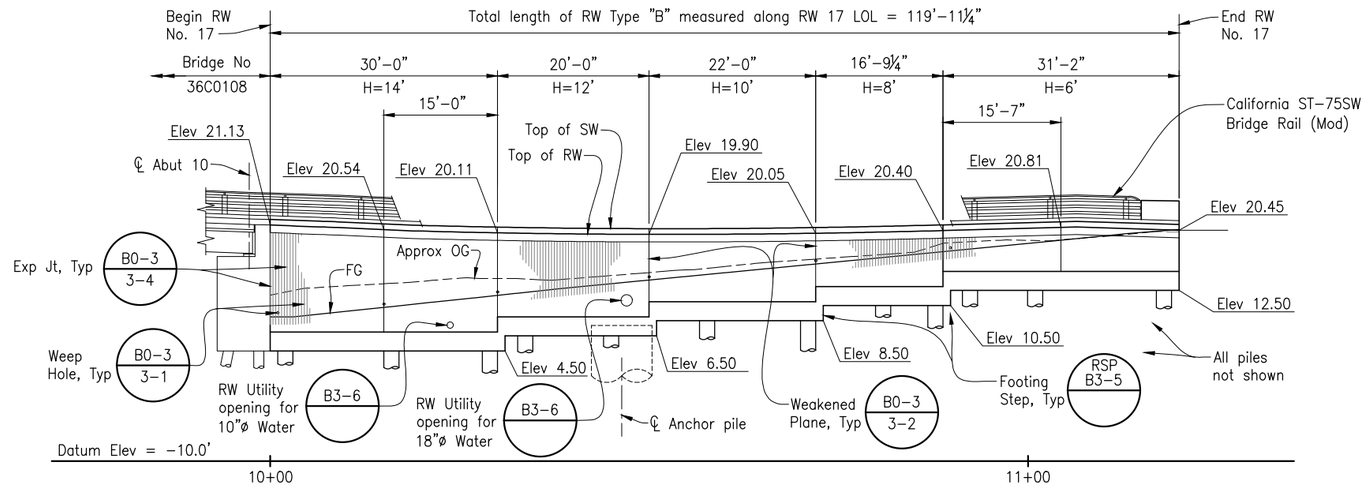

DEVELOPED ELEVATION

1"=10'

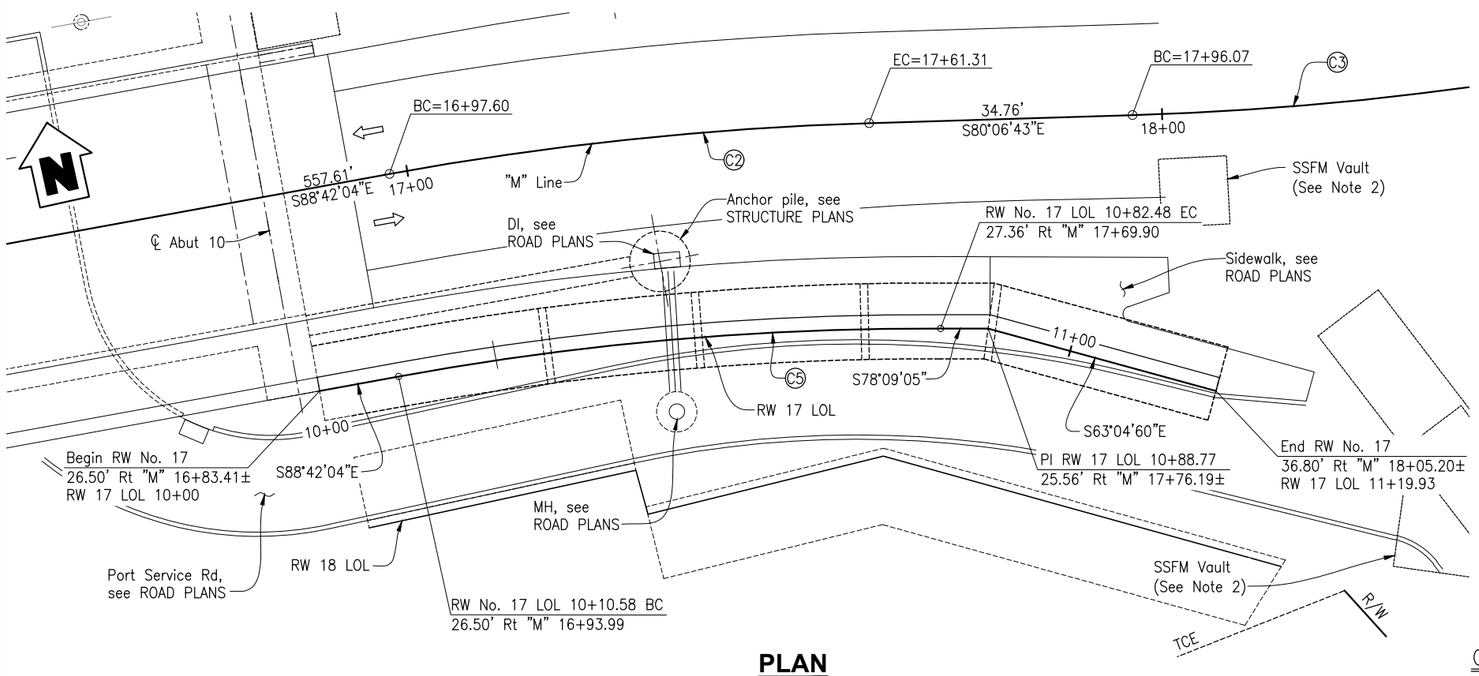

PLAN

1"=10'

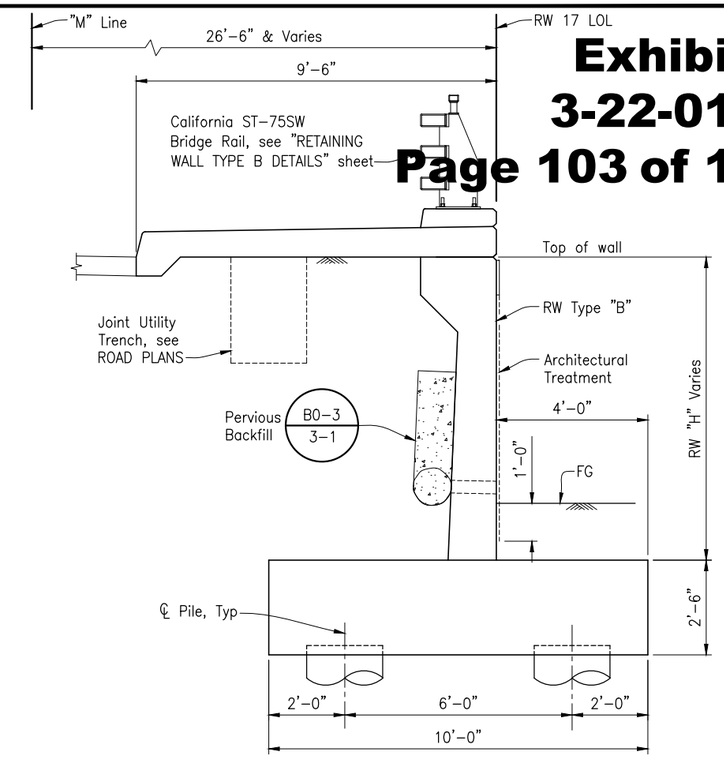

STA 10+00.00 TO 10+88.83 RW 17 LOL

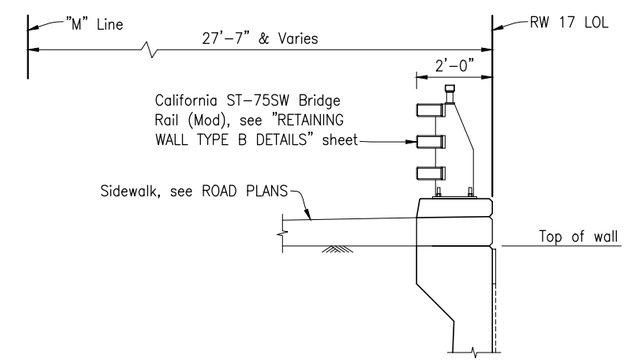

STA 10+88.83 TO 11+20.00 RW 17 LOL

TYPE "B" RW

TYPICAL SECTION

½"=1'-0"

LEGEND:

⇦ Indicates Direction of Traffic

NOTE:
THE CONTRACTOR SHALL VERIFY ALL CONTROLLING FIELD DIMENSIONS BEFORE ORDERING OR FABRICATING ANY MATERIAL.

NOTE:

1. For "DESIGN DATA" and details for Type "B" RW, see "RETAINING WALL TYPE B DETAILS" sheet.
2. For Sanitary Sewer Force Main (SSFM) details, see SANITARY SEWER PLANS.

CURVE DATA

NO	R	Δ	T	L
C2	425.00'	08°35'20"	31.91'	63.71'
C3	425.00'	13°20'06"	49.68'	98.91'
C5	390.50'	10°32'59"	36.05'	71.90'

QUANTITIES

STRUCTURE EXCAVATION (RETAINING WALL)	407	CY
STRUCTURE BACKFILL (RETAINING WALL)	347	CY
FURNISH 24" CAST-IN-STEEL SHELL CONCRETE PILING	1,191	LF
DRIVE 24" CAST-IN-STEEL SHELL CONCRETE PILING	37	EA
STRUCTURE CONCRETE, RETAINING WALL	164	CY
ARCHITECTURAL TREATMENT	776	SQFT
BAR REINFORCING STEEL (RETAINING WALL)	43,216	LB
CALIFORNIA ST-75 BRIDGE RAIL	89	LF
CALIFORNIA ST-75 BRIDGE RAIL (Mod)	31	LF

100% SUBMITTAL
NOT FOR CONSTRUCTION

RW-8

REGISTERED PROFESSIONAL ENGINEER — CAMERON PINKERTON — No. 3108 — 03-31-22 — CIVIL — STATE OF CALIFORNIA
REGISTERED ENGINEER – CIVIL
TRC Engineers or its officers or agents shall not be responsible for the accuracy or completeness of electronic copies of this plan sheet

CITY OF SANTA CRUZ

PREPARED FOR THE
CITY OF SANTA CRUZ
PUBLIC WORKS DEPARTMENT

DESIGN	BY C. PINKERTON	CHECKED M. PUROHIT
DETAILS	BY G. IMBSEN	CHECKED M. PUROHIT
QUANTITIES	BY C. PINKERTON	CHECKED M. PUROHIT

ORIGINAL SCALE IN INCHES FOR REDUCED PLANS 0 1 2 3

TRC
MARK IMBRIANI
PROJECT MANAGER

BRIDGE NO. 36C0108
CONTRACT NO.
EA NO.

MURRAY STREET BRIDGE
SEISMIC RETROFIT AND BARRIER REPLACEMENT
RETAINING WALL NO. 17 LAYOUT

DISREGARD PRINTS BEARING EARLIER REVISION DATES → 07-01-15 10-23-15 08-06-21
REVISION DATES (PRELIMINARY STAGE ONLY)

SCALE AS SHOWN
SHEET 105 OF 167
VAULT NO. XXXXXXX

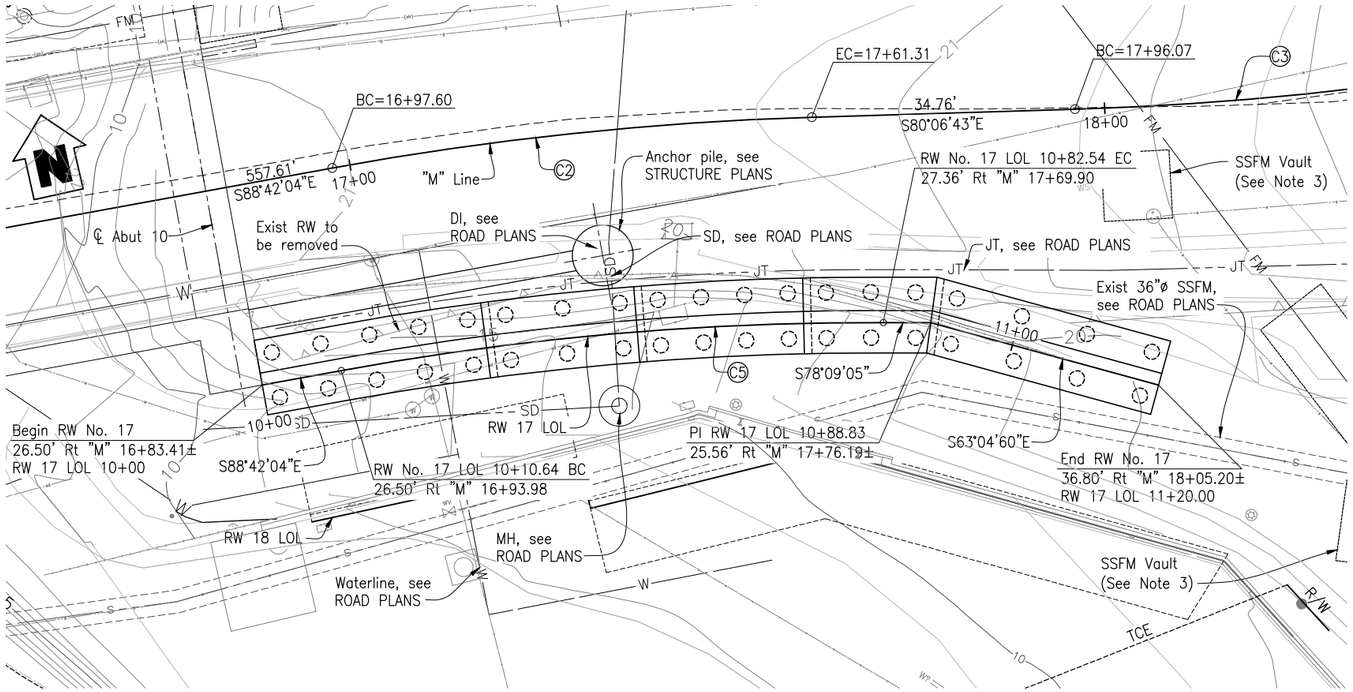

FOUNDATION PLAN

1"=10'

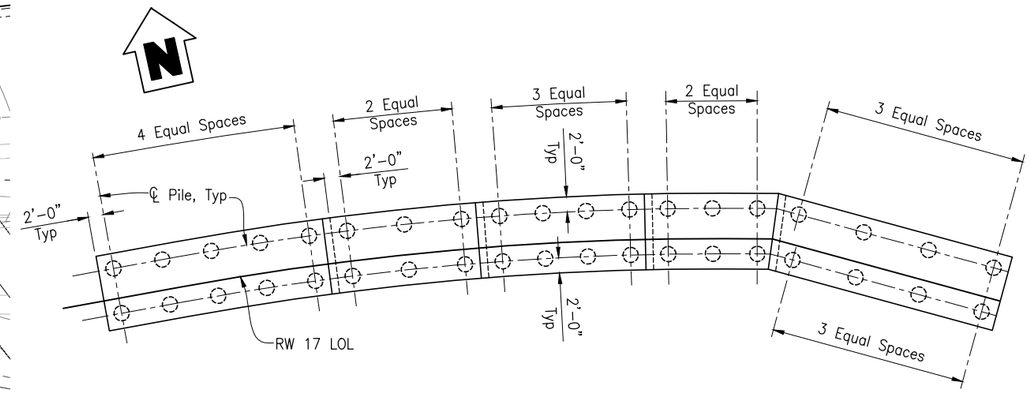

PILE LAYOUT

1"=10'

PILE DATA TABLE

DESIGN HEIGHT	PILE TYPE	NOMINAL RESISTANCE (kips)		DESIGN TIP ELEVATIONS (ft)	SPECIFIED TIP ELEVATIONS (ft)	NOMINAL DRIVING RESISTANCE (kips)
		COMPRESSION	TENSION			
H=14'	CISS NPS 24x0.5	150	10	−36 (a), −23 (b), −14(d)	−36	150
H=12'	CISS NPS 24x0.5	130	0	−27 (a), −26 (d)	−27	130
H=10'	CISS NPS 24x0.5	90	0	−18 (a), −22 (d)	−22	90
H=8'	CISS NPS 24x0.5	80	0	−11 (a), −22 (d)	−22	90
H=6'	CISS NPS 24x0.5	90	0	−9 (a), −22 (d)	−22	90

Notes:
1. Design tip elevations are controlled by a) Compression, b) Tension, c) Lateral load.
2. The Specified Tip elevation shall not be raised above the design tip elevations for tension load, lateral load, and tolerable settlement.
3. Unsuitable soil layers (very, soft, liquefiable, scourable, etc.) that do not contribute to the nominal resistance exist at all support locations.

LEGEND:

◌ Indicates 24"ø CISS Piling

NOTES:

1. The Contractor shall field locate all utilities in vicinity of wall prior to wall construction.
2. Utilities to remain shall be protected in place, see UTILITY PLANS.
3. For Sanitary Sewer Force Main (SSFM) details, see SANITARY SEWER PLANS.

NOTE:
THE CONTRACTOR SHALL VERIFY ALL CONTROLLING FIELD DIMENSIONS BEFORE ORDERING OR FABRICATING ANY MATERIAL.

100% SUBMITTAL
NOT FOR CONSTRUCTION

RW-9

REGISTERED PROFESSIONAL ENGINEER — CAMERON PINKERTON — No. 84531 — CIVIL — STATE OF CALIFORNIA — 10-23-22

REGISTERED ENGINEER – CIVIL

TRC Engineers or its officers or agents shall not be responsible for the accuracy or completeness of electronic copies of this plan sheet

CITY OF SANTA CRUZ

PREPARED FOR THE
CITY OF SANTA CRUZ
PUBLIC WORKS DEPARTMENT

	BY	CHECKED
DESIGN	C. PINKERTON	M. PUROHIT
DETAILS	G. IMBSEN	M. PUROHIT
QUANTITIES	C. PINKERTON	M. PUROHIT

ORIGINAL SCALE IN INCHES FOR REDUCED PLANS 0 1 2 3

TRC
MARK IMBRIANI
PROJECT MANAGER

BRIDGE NO. 36C0108
CONTRACT NO.
EA NO.

MURRAY STREET BRIDGE
SEISMIC RETROFIT AND BARRIER REPLACEMEN
RETAINING WALL NO. 17 DETAILS

DISREGARD PRINTS BEARING EARLIER REVISION DATES → 07-01-15 | 10-23-15 | 08-06-21
REVISION DATES (PRELIMINARY STAGE ONLY)

SCALE AS SHOWN
SHEET 106 OF 167
VAULT NO. XXXXXXX

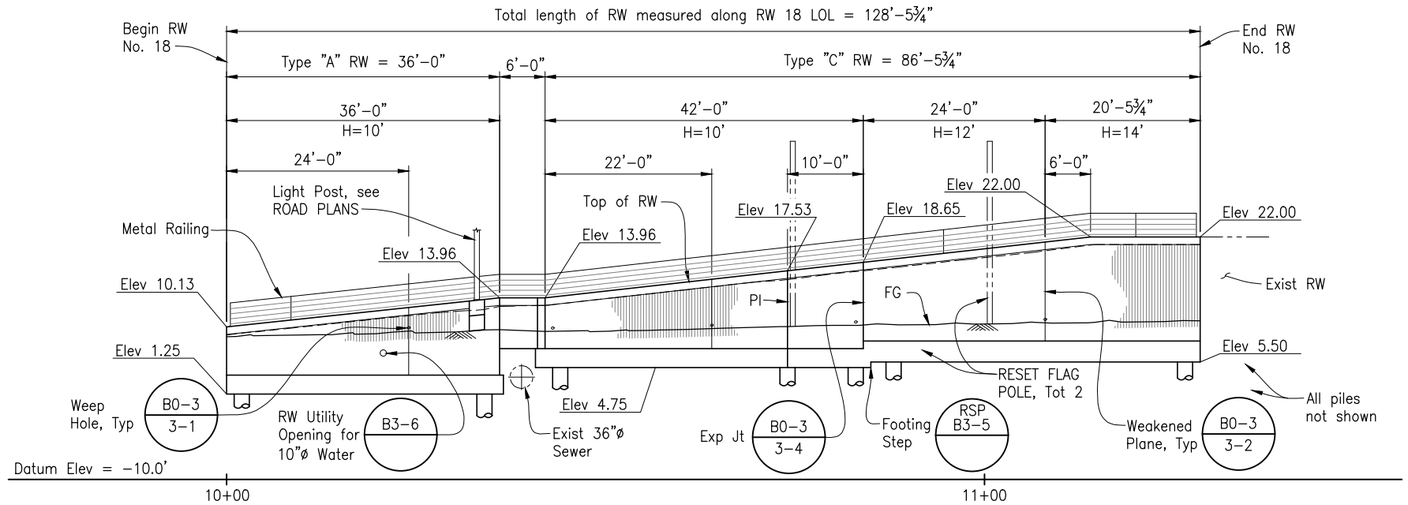

DEVELOPED ELEVATION

1"=10'

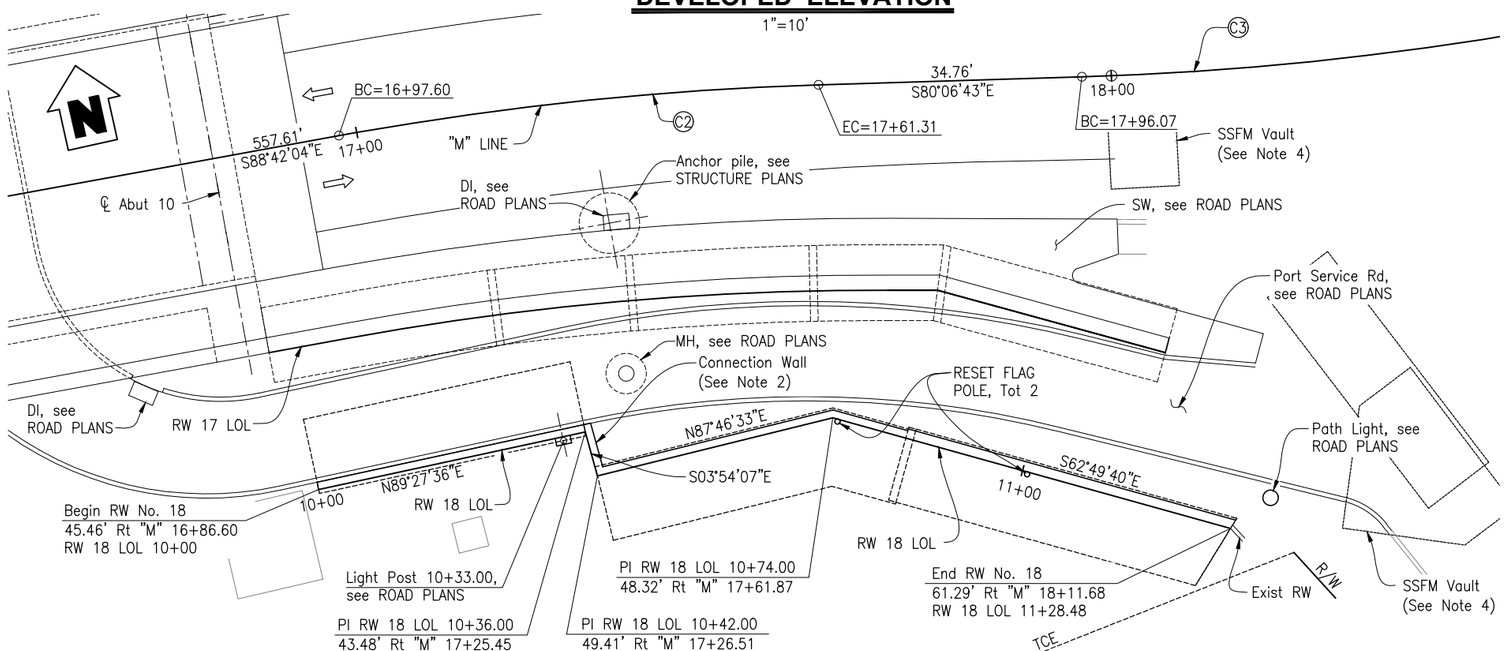

PLAN

1"=10'

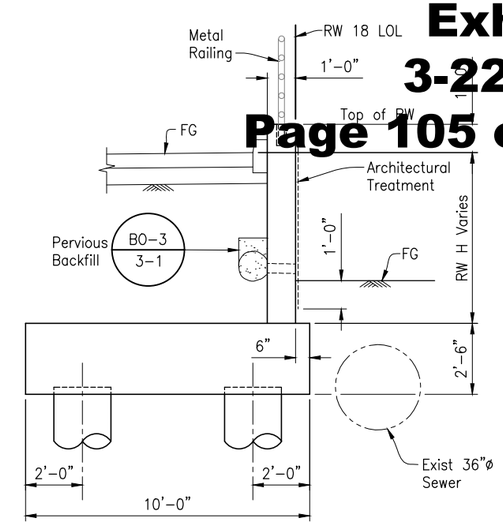

TYPE "A" RW

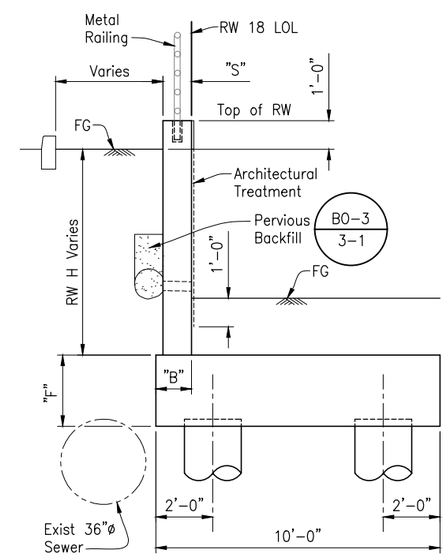

TYPE "C" RW

TYPICAL SECTION

⅜"=1'-0"

NOTES:

1. For "DESIGN DATA" and details, see "RETAINING WALL TYPE A DETAILS" and "RETAINING WALL TYPE C DETAILS" sheets.
2. For Connection Wall details, see "RETAINING WALL NO. 18 DETAILS" sheet.
3. Protect existing utilities, see UTILITY PLANS.
4. For Sanitary Sewer Force Main (SSFM) details, see SANITARY SEWER PLANS.

LEGEND:

⇦ Indicates Direction of Traffic

NOTE:
THE CONTRACTOR SHALL VERIFY ALL CONTROLLING FIELD DIMENSIONS BEFORE ORDERING OR FABRICATING ANY MATERIAL.

CURVE DATA				
NO	R	Δ	T	L
C2	425.00'	08°35'20"	31.91'	63.71'
C3	425.00'	13°20'06"	49.68'	98.91'

QUANTITIES

STRUCTURE EXCAVATION (RETAINING WALL)	306	CY
STRUCTURE BACKFILL (RETAINING WALL)	241	CY
FURNISH 24" CAST-IN-STEEL SHELL CONCRETE PILING	867	LF
DRIVE 24" CAST-IN-STEEL SHELL CONCRETE PILING	30	EA
STRUCTURE CONCRETE, RETAINING WALL	184	CY
ARCHITECTURAL TREATMENT	1,149	SQFT
BAR REINFORCING STEEL (RETAINING WALL)	39,354	LB
METAL RAILING	142	LF

100% SUBMITTAL
NOT FOR CONSTRUCTION

RW-10

REGISTERED PROFESSIONAL ENGINEER CAMERON PINKERTON No. 5108 Exp. 31-22 CIVIL STATE OF CALIFORNIA
REGISTERED ENGINEER – CIVIL
TRC Engineers or its officers or agents shall not be responsible for the accuracy or completeness of electronic copies of this plan sheet

CITY OF SANTA CRUZ

PREPARED FOR THE
CITY OF SANTA CRUZ
PUBLIC WORKS DEPARTMENT

	BY	CHECKED
DESIGN	C. PINKERTON	M. PUROHIT
DETAILS	G. IMBSEN	M. PUROHIT
QUANTITIES	C. PINKERTON	M. PUROHIT

ORIGINAL SCALE IN INCHES FOR REDUCED PLANS 0 1 2 3

TRC
MARK IMBRIANI
PROJECT MANAGER

BRIDGE NO. 36C0108
CONTRACT NO.
EA NO.

MURRAY STREET BRIDGE SEISMIC RETROFIT AND BARRIER REPLACEMEN

RETAINING WALL NO. 18 LAYOUT

DISREGARD PRINTS BEARING EARLIER REVISION DATES
REVISION DATES (PRELIMINARY STAGE ONLY) 7-01-15 10-23-15 8-06-21

SCALE AS SHOWN
SHEET 107 OF 167
VAULT NO. XXXXXXX

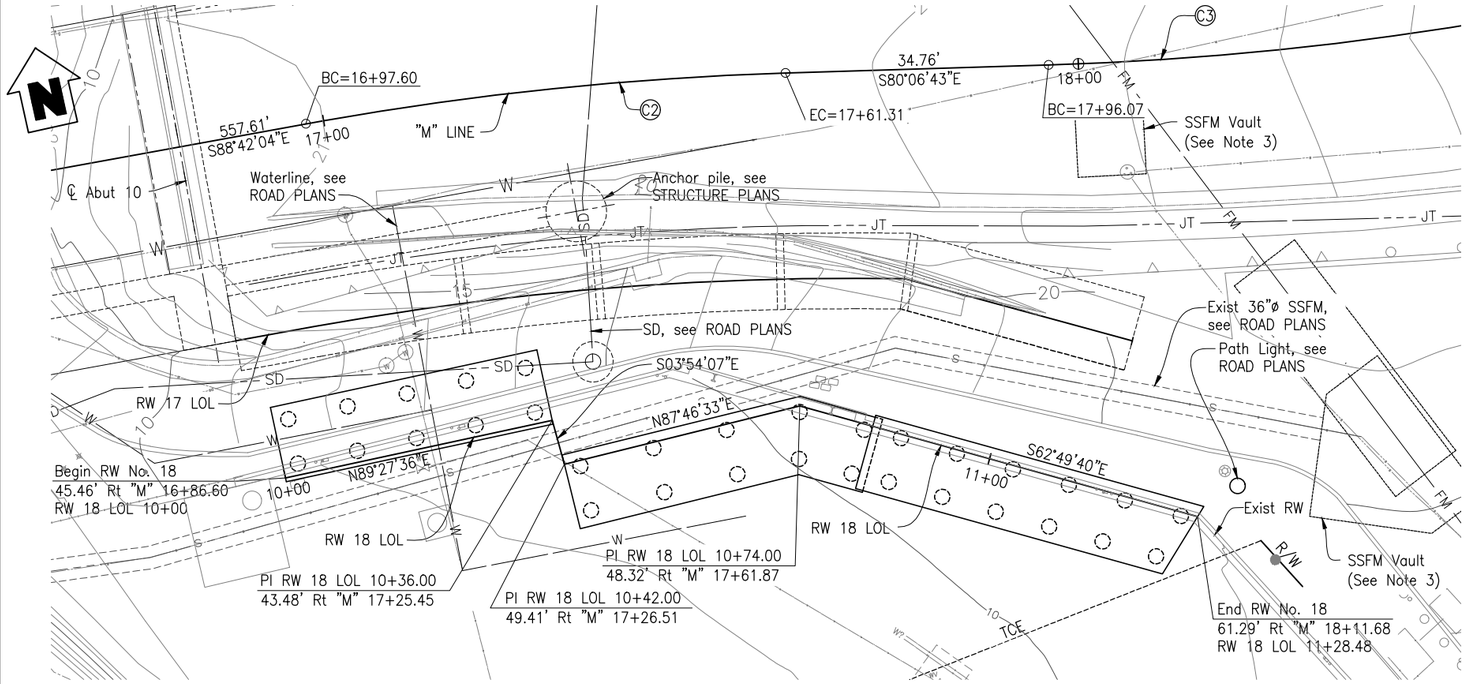

FOUNDATION PLAN

1"=10'

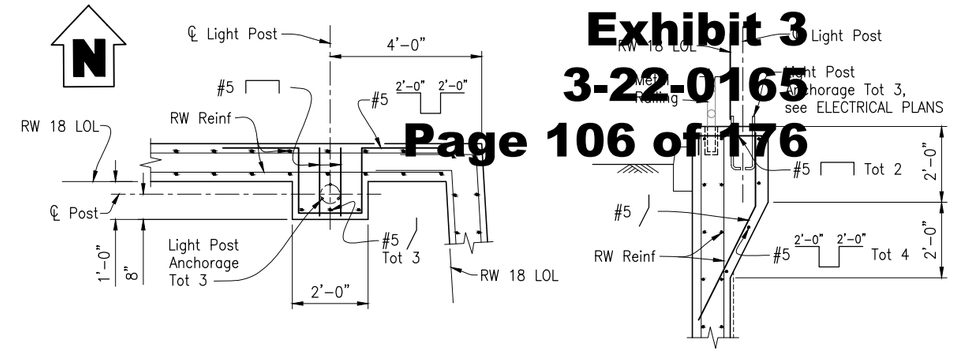

PLAN **SECTION**

LIGHT POST MOUNTING DETAILS

½"=1'-0"

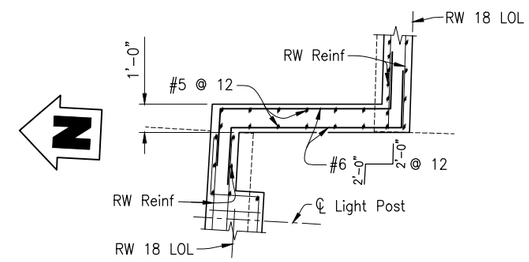

PLAN

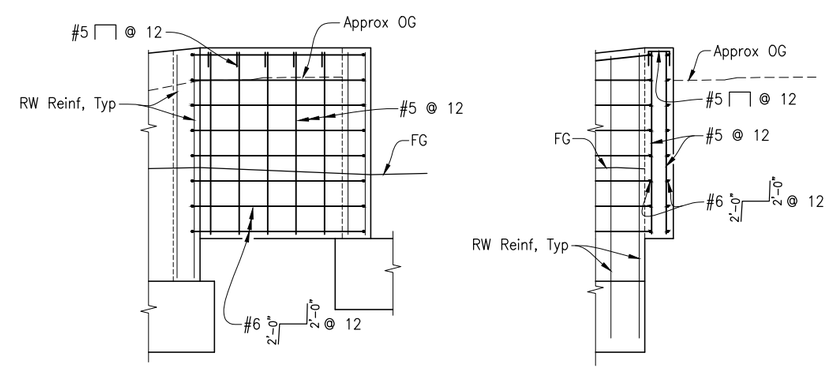

ELEVATION **SECTION**

CONNECTION WALL DETAILS

⅜"=1'-0"

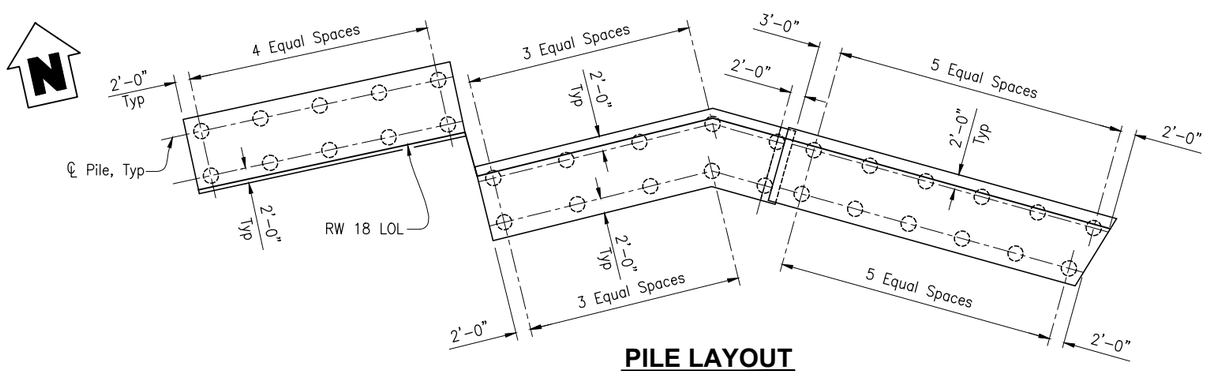

PILE LAYOUT

1"=10'

PILE DATA TABLE

DESIGN HEIGHT	PILE TYPE	NOMINAL RESISTANCE (kips)		DESIGN TIP ELEVATIONS (ft)	SPECIFIED TIP ELEVATIONS (ft)	NOMINAL DRIVING RESISTANCE (kips)
		COMPRESSION	TENSION			
H=8'	CISS NPS 24x0.5	170	0	−39 (a), −34 (d)	−35	200
H=10'	CISS NPS 24x0.5	100	20	−24 (a), −19 (b), −29 (d)	−29	200
H=12'	CISS NPS 24x0.5	130	20	−25 (a), −15 (b), −29 (d)	−29	200
H=14'	CISS NPS 24x0.5	140	40	−27 (a), −19 (b), −29 (d)	−29	200

Notes:
1. Design tip elevations are controlled by a) Compression, b) Tension, d) Lateral load.
2. The Specified Tip elevation shall not be raised above the design tip elevations for tension load, lateral load, and tolerable settlement.
3. Unsuitable soil layers (very, soft, liquefiable, scourable, etc.) that do not contribute to the nominal resistance exist at all support locations.

LEGEND:

◯ Indicates 24"ø CISS Piling

NOTES:

1. The Contractor shall field locate all utilities in vicinity of wall prior to wall construction.
2. Utilities to remain shall be protected in place, see UTILITY PLANS.
3. For Sanitary Sewer Force Main (SSFM) details, see SANITARY SEWER PLANS.

NOTE:
THE CONTRACTOR SHALL VERIFY ALL CONTROLLING FIELD DIMENSIONS BEFORE ORDERING OR FABRICATING ANY MATERIAL.

100% SUBMITTAL
NOT FOR CONSTRUCTION

RW-11

REGISTERED PROFESSIONAL ENGINEER CAMERON PINKERTON No. 3[illegible] 31-22 CIVIL STATE OF CALIFORNIA
REGISTERED ENGINEER – CIVIL
TRC Engineers or its officers or agents shall not be responsible for the accuracy or completeness of electronic copies of this plan sheet

CITY OF SANTA CRUZ
PREPARED FOR THE
CITY OF SANTA CRUZ
PUBLIC WORKS DEPARTMENT

	BY	CHECKED
DESIGN	C. PINKERTON	M. PUROHIT
DETAILS	G. IMBSEN	M. PUROHIT
QUANTITIES	C. PINKERTON	M. PUROHIT

ORIGINAL SCALE IN INCHES FOR REDUCED PLANS 0 1 2 3

TRC
MARK IMBRIANI
PROJECT MANAGER

BRIDGE NO. 36C0108
CONTRACT NO.
EA NO.

MURRAY STREET BRIDGE
SEISMIC RETROFIT AND BARRIER REPLACEMEN
RETAINING WALL NO. 18 DETAILS

DISREGARD PRINTS BEARING EARLIER REVISION DATES
REVISION DATES (PRELIMINARY STAGE ONLY) 7-01-15 10-23-15 8-06-21

SCALE AS SHOWN
SHEET 108 OF 167
VAULT NO. XXXXXXX

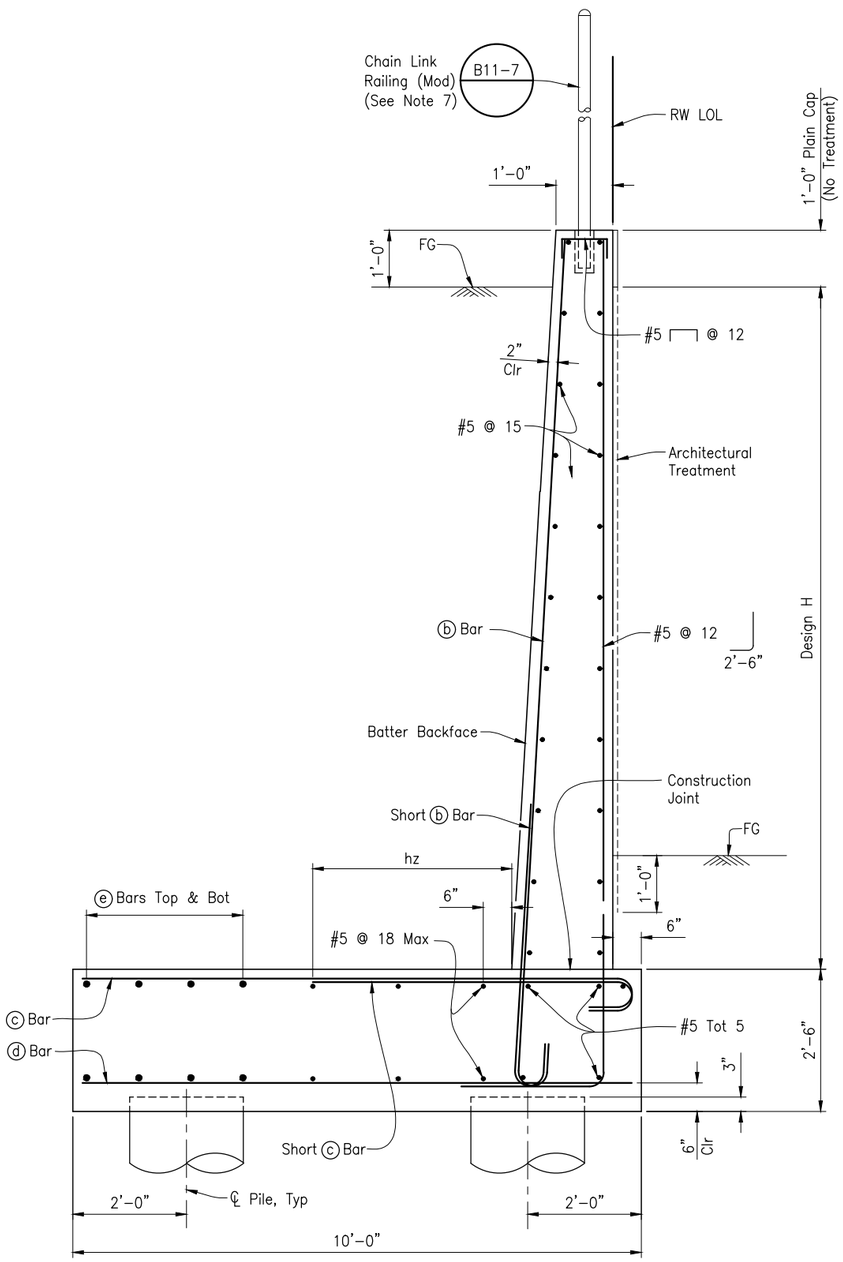

TYPICAL SECTION

¾"=1'-0"

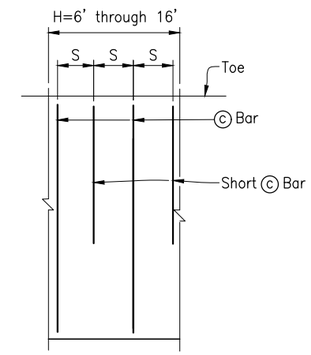

NOTES:
Only ⓒ bars shown
"S" is ⓒ bar spacing, see table

PLAN

NO SCALE

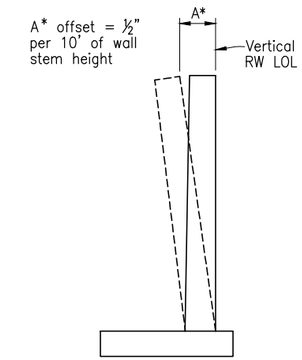

Values for offsetting forms to be determined by the engineer

WALL OFFSET

NO SCALE

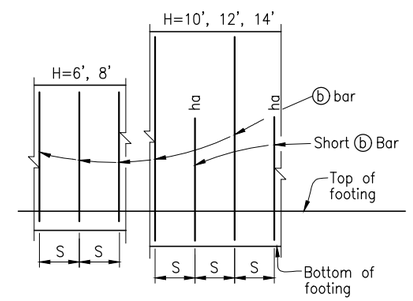

NOTES:
"ha" and "hb" above ⓑ bars indicate distance from top of footing to upper end of ⓑ bars, see table.
"S" is ⓑ bar spacing, see table.

ELEVATION

NO SCALE

DESIGN DATA

Design: AASHTO LRFD Bridge Design Specifications 4th edition with California Amendments

LS: Surcharge equivalent to 2 psf wet

EQE: Mononabe–Okabe Method

K_h = 0.3
K_v = 0.0

Soil: ϕ = 34°
γ = 120 pcf

Reinforced Concrete: f'c = 3600 psi
fy = 60,000 psi

Load Combinations and Limit States

Service I Q=1.00DC+1.00EV+1.00EH+1.00LS

Strength I Q=aDC+βEV+1.50EH+1.75LS

Extreme I Q=1.00DC+1.00EV+1.00EH+1.00EQD+1.00EQE

Where:

- Q: Force Effects
- α: 1.25 or 0.90, Which ever Controls Design
- β: 1.35 or 1.00, which ever Controls Design
- DC: Dead Load of Structure Components
- EV: Vertical Earth Fill Pressure
- LS: Live Load Surcharge
- EQE: Seismic Earth Pressure
- EQD: Soil and Structure Components Inertia. Soil inertia ignored for stem design

NOTES:

1. All piles are 24" Cast-in-steel shell concrete piling.
2. Minimum distance between center pile and edge of footing is 2'-0".
3. Lateral resistance of each pile:
   30 kip for strength limit states.
   40 kip for extreme limit states.
   Pile group reduction factors are not applied, unless soil passive resistance on footing is included.
4. For retaining wall architectural finish or texture, see details elsewhere in Project Plans.
5. For details not shown and drainage notes, see B3-5
6. Footing cover, 2'-0" minimum.
7. Chain Link railing with privacy slats used at RW 11. For RW 18 metal railing is used, see "RETAINING WALL TYPE C DETAILS" sheet.
8. All reinforcement must be prefabricated epoxy coated.

TABLE OF WALL REINFORCING STEEL

DESIGN H	8'	10'	12'	14'
BATTER	½:12	½:12	½:12	½:12
ⓑ BARS	#8@12	#7@6	#7@6	#7@6
ha		5'-0"	6'-0"	7'-0"
ⓒ BARS	#6@6	#7@6	#8@6	#9@6
hz	3'-6"	3'-6"	4'-0"	4'-3"
ⓓ BARS	#5@12	#5@12	#5@12	#5@12
ⓔ BARS	8-#7@11	8-#7@11	8-#7@13	8-#7@16

NOTE: Total ⓔ bars are top and bottom combined

NOTE:
THE CONTRACTOR SHALL VERIFY ALL CONTROLLING FIELD DIMENSIONS BEFORE ORDERING OR FABRICATING ANY MATERIAL.

100% SUBMITTAL
NOT FOR CONSTRUCTION

RW-12

REGISTERED PROFESSIONAL ENGINEER CAMERON PINKERTON No. 81-22 CIVIL STATE OF CALIFORNIA
REGISTERED ENGINEER – CIVIL
TRC Engineers or its officers or agents shall not be responsible for the accuracy or completeness of electronic copies of this plan sheet

CITY OF SANTA CRUZ
PREPARED FOR THE
CITY OF SANTA CRUZ
PUBLIC WORKS DEPARTMENT

	BY	CHECKED
DESIGN	C. PINKERTON	M. PUROHIT
DETAILS	G. IMBSEN	M. PUROHIT
QUANTITIES	C. PINKERTON	M. PUROHIT

ORIGINAL SCALE IN INCHES FOR REDUCED PLANS 0 1 2 3

TRC
MARK IMBRIANI
PROJECT MANAGER

BRIDGE NO. 36C0108
CONTRACT NO.
EA NO.

MURRAY STREET BRIDGE
SEISMIC RETROFIT AND BARRIER REPLACEMENT
RETAINING WALL TYPE A DETAILS

DISREGARD PRINTS BEARING EARLIER REVISION DATES
REVISION DATES (PRELIMINARY STAGE ONLY) 7-01-15 10-23-15 8-06-21

SCALE AS SHOWN
SHEET 109 OF 167
VAULT NO. XXXXXXX

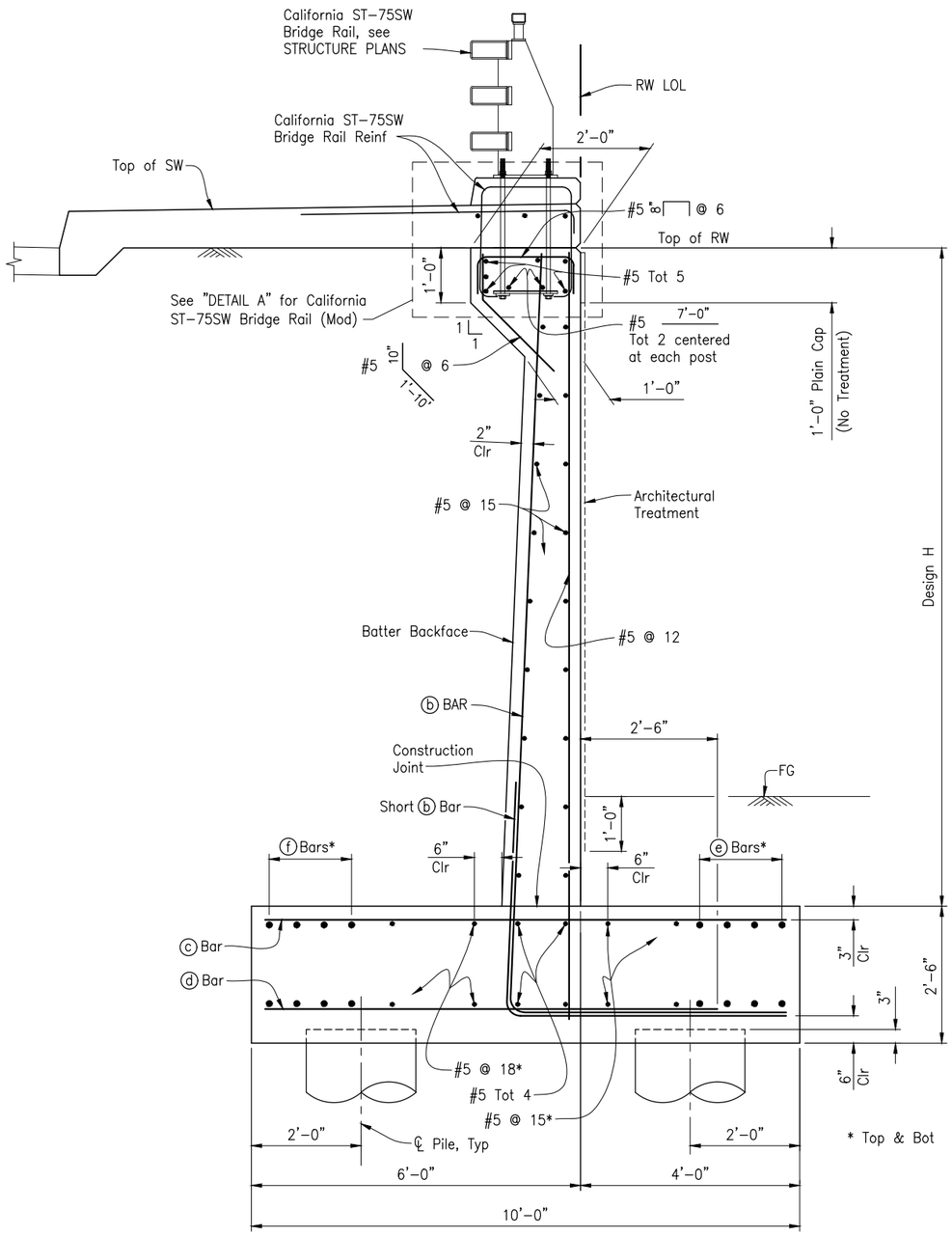

TYPICAL SECTION

¾"=1'–0"

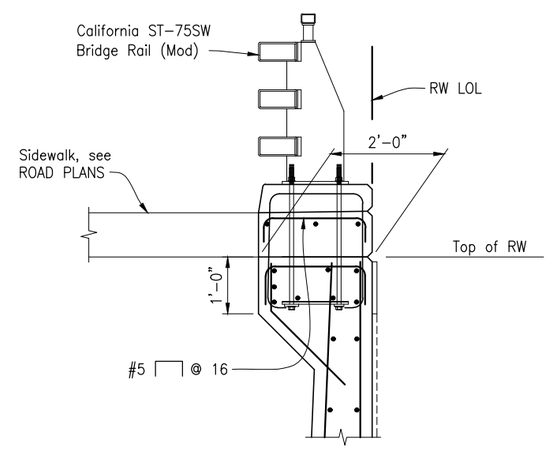

See "TYPICAL SECTION" FOR DETAILS NOT SHOWN

DETAIL A

¾"=1'–0"

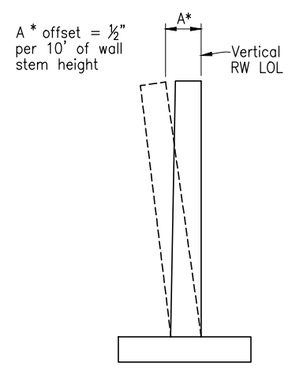

Values for offsetting forms to be determined by the engineer

WALL OFFSET

NO SCALE

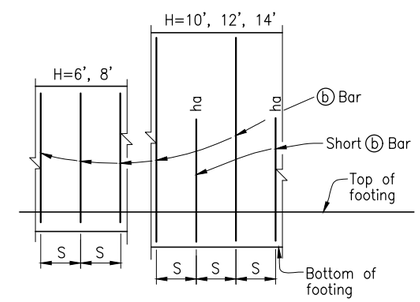

NOTES:
"ha" and "hb" above ⓑ bars indicate distance from top of footing to upper end of ⓑ bars, see table.
"S" is ⓑ bar spacing, see table.

ELEVATION

NO SCALE

DESIGN DATA

Design: AASHTO LRFD Bridge Design Specifications 4th edition with California Amendments

LS: Earth Pressure Equivalent to 30 Psf Surcharge

EQE: Mononabe–Okabe Method

K_h = 0.3
K_v = 0.0

Soil: Ø = 34°
γ = 120 pcf

Reinforced Concrete: f'c = 3600 psi
fy = 60,000 psi

Load Combinations and Limit States

Service I Q=1.00DC+1.00EV+1.00EH+1.00LS

Strength I Q=aDC+βEV+1.50EH+1.75LS

Extreme I Q=1.00DC+1.00EV+1.00EH+1.00EQD+1.00EQE

Where:

Q: Force Effects
α: 1.25 or 0.90, Which ever Controls Design
B: 1.35 or 1.00, which ever Controls Design
DC: Dead Load of Structure Components
EV: Vertical Earth Fill Pressure
LS: Live Load Surcharge
EQE: Seismic Earth Pressure
EQD: Soil and Structure Components Inertia. Soil inertia ignored for stem design

NOTES:

1. All piles are 24" Cast–in–steel shell concrete piling.
2. Minimum distance between center pile and edge of footing is 2'–0".
3. Lateral resistance of each pile:
   30 kip for strength limit states.
   40 kip for extreme limit states.
   Pile group reduction factors are not applied, unless soil passive resistance on footing is included.
4. For retaining wall architectural finish or texture, see details elsewhere in Project Plans.
5. For details not shown and drainage notes, see B3–5
6. Footing cover, 2'–0" minimum.
7. All reinforcement must be prefabricated epoxy coated.

TABLE OF WALL REINFORCING STEEL

DESIGN H	6'	8'	10'	12'	14'
BATTER	0	½:12	½:12	½:12	½:12
ⓑ BARS	#8@12	#7@9	#7@6	#7@6	#7@6
ha			5'–0"	6'–0"	7'–0"
ⓒ BARS	#6@12	#6@9	#6@6	#6@6	#6@6
ⓓ BARS	#5@12	#5@9	#5@12	#5@12	#5@12
ⓔ BARS	10–#7@6	8–#7@7	10–#6@6	8–#6@6	6–#6@12
ⓕ BARS	10–#8@7	10–#8@6	10–#7@8	12–#6@7	8–#7@11

NOTE: Total ⓔ & ⓕ bars are top and bottom combined

NOTE:
THE CONTRACTOR SHALL VERIFY ALL CONTROLLING FIELD DIMENSIONS BEFORE ORDERING OR FABRICATING ANY MATERIAL.

100% SUBMITTAL
NOT FOR CONSTRUCTION

RW-13

REGISTERED PROFESSIONAL ENGINEER — CAMERON PINKERTON — No. C 68631 — Exp. 12-31-22 — CIVIL — STATE OF CALIFORNIA

REGISTERED ENGINEER – CIVIL

TRC Engineers or its officers or agents shall not be responsible for the accuracy or completeness of electronic copies of this plan sheet

CITY OF SANTA CRUZ

PREPARED FOR THE
CITY OF SANTA CRUZ
PUBLIC WORKS DEPARTMENT

	BY	CHECKED
DESIGN	C. PINKERTON	M. PUROHIT
DETAILS	G. IMBSEN	M. PUROHIT
QUANTITIES	C. PINKERTON	M. PUROHIT

ORIGINAL SCALE IN INCHES FOR REDUCED PLANS 0 1 2 3

TRC
MARK IMBRIANI
PROJECT MANAGER

BRIDGE NO. 36C0108
CONTRACT NO.
EA NO.

MURRAY STREET BRIDGE
SEISMIC RETROFIT AND BARRIER REPLACEMENT
RETAINING WALL TYPE B DETAILS

DISREGARD PRINTS BEARING EARLIER REVISION DATES
REVISION DATES (PRELIMINARY STAGE ONLY) 7-08-15 10-23-15 8-06-21

SCALE AS SHOWN
SHEET 110 OF 167
VAULT NO. XXXXXXX

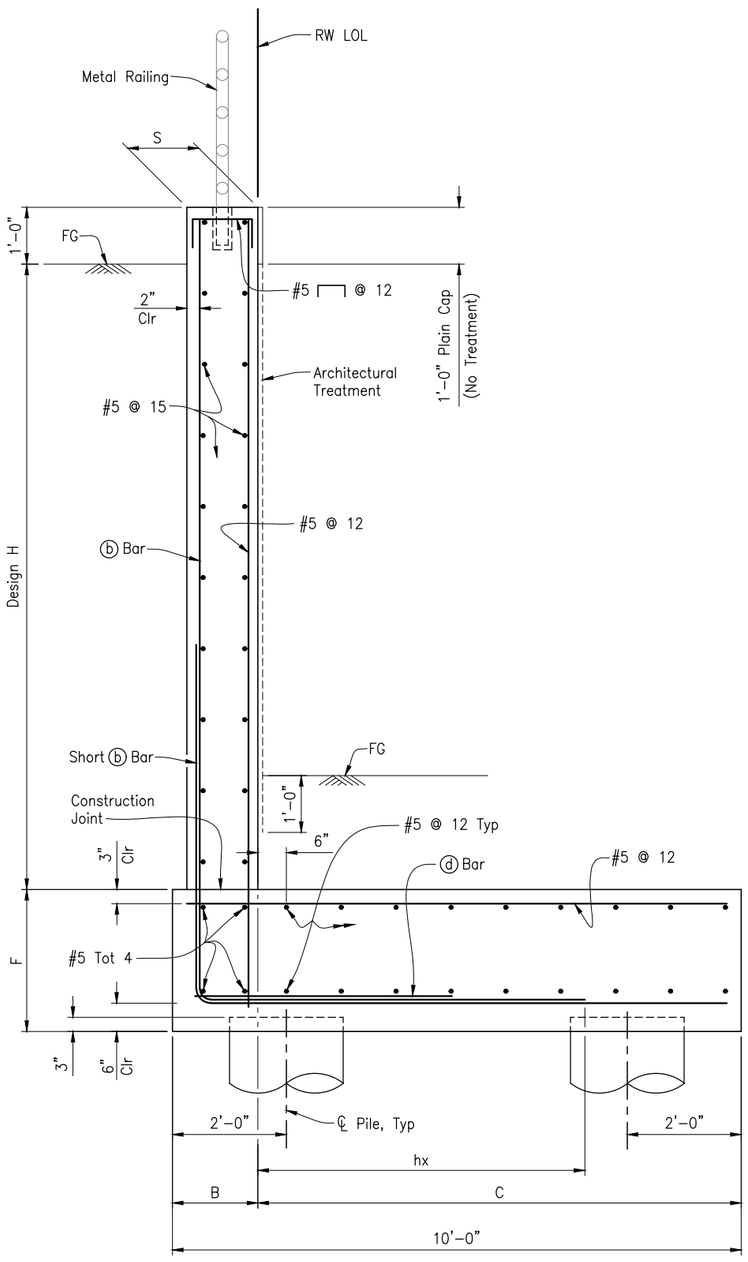

TYPICAL SECTION

¾"=1'-0"

NOTE:
THE CONTRACTOR SHALL VERIFY ALL CONTROLLING FIELD DIMENSIONS BEFORE ORDERING OR FABRICATING ANY MATERIAL.

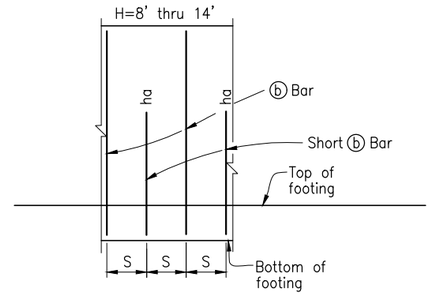

NOTES:
"ha" and "hb" above ⓑ bars indicate distance from top of footing to upper end of ⓑ bars, see table.
"S" is ⓑ bar spacing, see table.

ELEVATION

NO SCALE

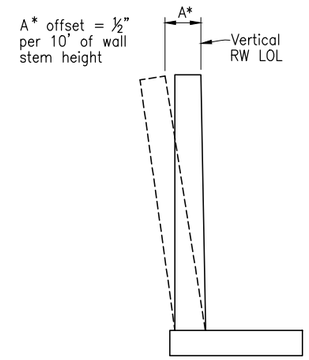

Values for offsetting forms to be determined by the engineer

WALL OFFSET

NO SCALE

DESIGN DATA

Design: AASHTO LRFD Bridge Design Specifications 4th edition with California Amendments

LS: 70 psf surcharge to 20 ft of wall height

EQE: Mononabe–Okabe Method

K_h = 0.3
K_v = 0.0

Soil: ϕ = 34°
γ = 120 pcf

Reinforced Concrete: f'c = 3600 psi
fy = 60,000 psi

Load Combinations and Limit States

Service I Q=1.00DC+1.00EV+1.00EH+1.00LS

Strength I Q=aDC+βEV+1.50EH+1.75LS

Extreme I Q=1.00DC+1.00EV+1.00EH+1.00EQD+1.00EQE

Where:

- Q: Force Effects
- a: 1.25 or 0.90, Which ever Controls Design
- B: 1.35 or 1.00, which ever Controls Design
- DC: Dead Load of Structure Components
- EV: Vertical Earth Fill Pressure
- LS: Live Load Surcharge
- EQE: Seismic Earth Pressure
- EQD: Soil and Structure Components Inertia. Soil inertia ignored for stem design

TABLE OF WALL DIMENSIONS & REINFORCING STEEL

DESIGN H	10'	12'	14'
C	8'-9"	8'-6"	8'-6"
B	1'-3"	1'-6"	1'-6"
F	2'-6"	2'-9"	2'-9"
S	1'-0"	1'-3"	1'-3"
ⓑ BARS	#5 @ 5.5	#5 @ 4.5	#6 @ 5
ha	9'-10"	6'-0"	6'-0"
hx	5'-9"	6'-0"	6'-3"
ⓓ BARS	#5 @ 11	#5 @ 9	#5 @ 10
ⓓ BAR LENGTH	4'-6"	4'-6"	6'-0"
H_D (k/ft), SVC	3.3	4.2	5.1
H_D (k/ft), Str	5.2	6.6	8.0
H_D (k/ft), ext	6.5	8.6	10.5

LEGEND:
H_D: Factored Horizontal Driving Force
SVC: Service Limit State
Str: Strength Limit State
ext: Extreme Event Limit State

NOTES:

1. All piles are 24" Cast-in-steel shell concrete piling.
2. Minimum distance between center pile and edge of footing is 2'-0".
3. Lateral resistance of each pile:
   30 kip for strength limit states.
   40 kip for extreme limit states.
   Pile group reduction factors are not applied, unless soil passive resistance on footing is included.
4. For retaining wall architectural finish or texture, see details elsewhere in Project Plans.
5. For details not shown and drainage notes, see B3-5
6. Footing cover, 2'-0" minimum.
7. All reinforcement must be prefabricated epoxy coated.

100% SUBMITTAL
NOT FOR CONSTRUCTION

RW-14

REGISTERED PROFESSIONAL ENGINEER CAMERON PINKERTON No. C-31-22 CIVIL STATE OF CALIFORNIA
REGISTERED ENGINEER – CIVIL
TRC Engineers or its officers or agents shall not be responsible for the accuracy or completeness of electronic copies of this plan sheet

CITY OF SANTA CRUZ
PREPARED FOR THE
CITY OF SANTA CRUZ
PUBLIC WORKS DEPARTMENT

	BY	CHECKED
DESIGN	C. PINKERTON	M. PUROHIT
DETAILS	G. IMBSEN	M. PUROHIT
QUANTITIES	C. PINKERTON	M. PUROHIT

ORIGINAL SCALE IN INCHES FOR REDUCED PLANS 0 1 2 3

TRC
MARK IMBRIANI
PROJECT MANAGER

BRIDGE NO. 36C0108
CONTRACT NO.
EA NO.

MURRAY STREET BRIDGE
SEISMIC RETROFIT AND BARRIER REPLACEMENT
RETAINING WALL TYPE C DETAILS

DISREGARD PRINTS BEARING EARLIER REVISION DATES → 7-01-15 10-23-15 8-06-21
REVISION DATES (PRELIMINARY STAGE ONLY)

SCALE AS SHOWN
SHEET 111 OF 167
VAULT NO. XXXXXXX

Drawing name: H:\1161 – Santa Cruz\Murray Street Bridge Seismic Retrofit\XX_RW Type C_Details.dwg Layout Tab: Layout1 Aug 27,2021 – 2:51pm gimbsen

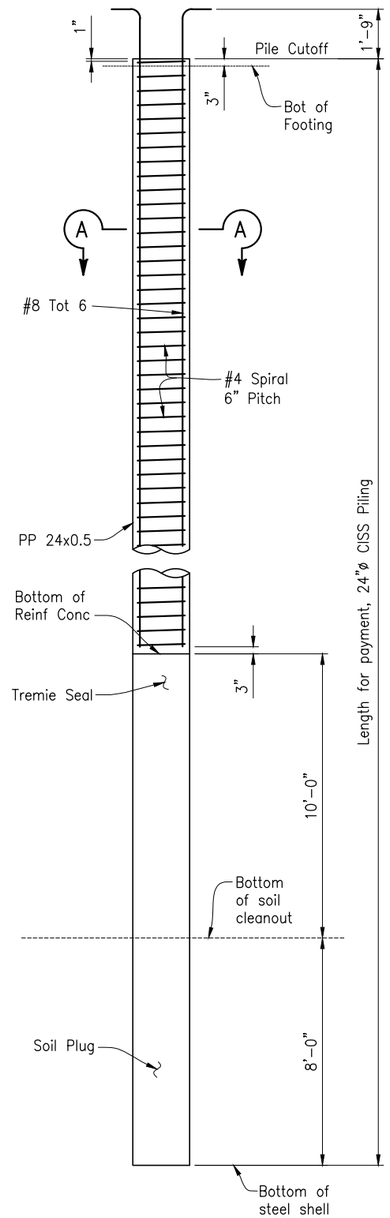

24"Ø CISS PILING

3/8"=1'-0"

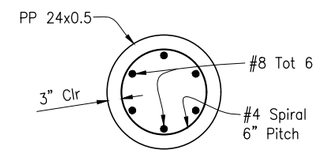

SECTION A-A

3/4"=1'-0"

NOTE:
THE CONTRACTOR SHALL VERIFY ALL CONTROLLING FIELD DIMENSIONS BEFORE ORDERING OR FABRICATING ANY MATERIAL.

100% SUBMITTAL NOT FOR CONSTRUCTION

RW-15

REGISTERED PROFESSIONAL ENGINEER CAMERON PINKERTON No. 81-22 CIVIL STATE OF CALIFORNIA

REGISTERED ENGINEER – CIVIL

TRC Engineers or its officers or agents shall not be responsible for the accuracy or completeness of electronic copies of this plan sheet

CITY OF SANTA CRUZ

PREPARED FOR THE
CITY OF SANTA CRUZ
PUBLIC WORKS DEPARTMENT

DESIGN	BY C. PINKERTON	CHECKED M. PUROHIT
DETAILS	BY A. CARDOZA	CHECKED M. PUROHIT
QUANTITIES	BY C. PINKERTON	CHECKED M. PUROHIT

ORIGINAL SCALE IN INCHES FOR REDUCED PLANS 0 1 2 3

TRC
MARK IMBRIANI
PROJECT MANAGER

BRIDGE NO. 36C0108
CONTRACT NO.
EA NO.

MURRAY STREET BRIDGE
SEISMIC RETROFIT AND BARRIER REPLACEMENT
RETAINING WALL PILE DETAILS

DISREGARD PRINTS BEARING EARLIER REVISION DATES → REVISION DATES (PRELIMINARY STAGE ONLY) 08-31-15 10-23-15 8-10-21

SCALE AS SHOWN
SHEET 112 OF 167
VAULT NO. XXXXXXX

Drawing name: H:\1161 – Santa Cruz\Murray Street Bridge Seismic Retrofit\XX_RW Type D_Details.dwg Layout Tab: Layout1 Aug 27,2021 – 2:53pm gimbsen

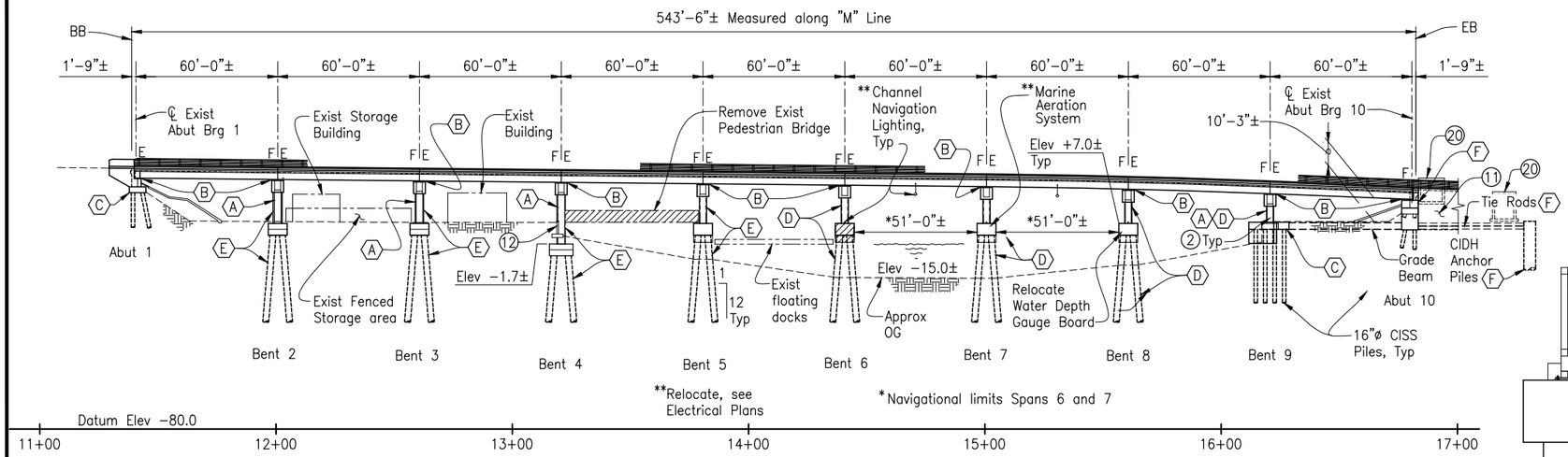

ELEVATION
1"=30'

RETROFIT LEGEND:

- (A) Concrete Infill Wall
- (B) Shear Key and Seat Extension
- (C) Foundation Retrofit with CISS Piles
- (D) Bent Retrofit with CISS Piles
- (E) Bent Retrofit with CIDH Piles with Casing
- (F) Abutment Retrofit with Tie Rods and Anchor Piles
- (G) Curtain Wall

LEGEND:

- Indicates Existing Structure
- Indicates New Structure
- Indicates Direction of Traffic
- Indicates Direction of Flow
- F Indicates Fixed Bearing
- E Indicates Expansion Bearing
- Indicates Bridge Removal (Portion)
- Indicates Point of Minimum Vertical Clearance over Port service road

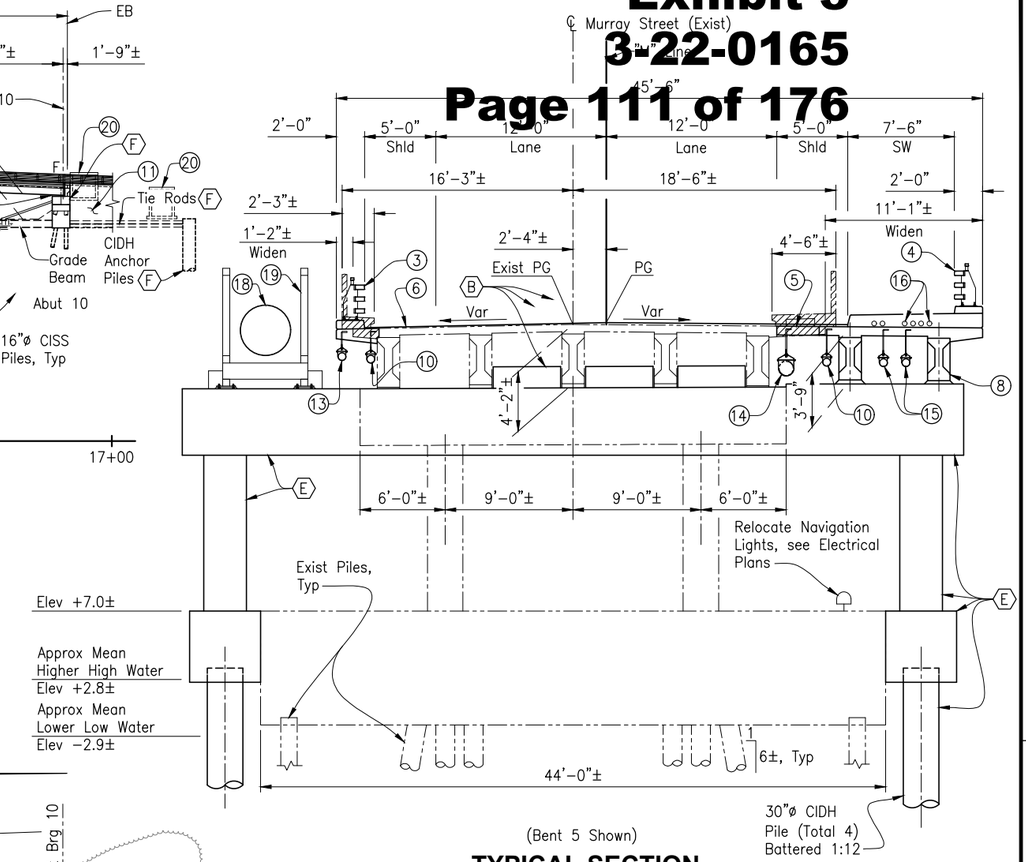

(Bent 5 Shown)

TYPICAL SECTION
3/16"=1'-0"

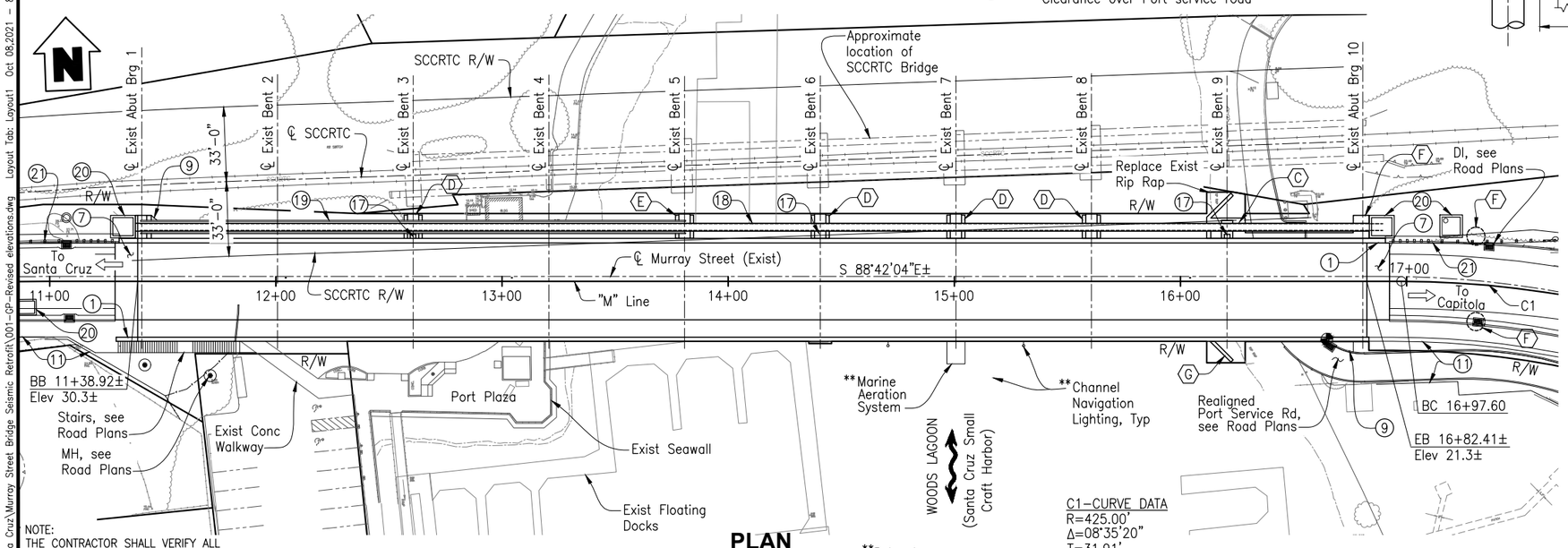

NOTE:
THE CONTRACTOR SHALL VERIFY ALL CONTROLLING FIELD DIMENSIONS BEFORE ORDERING OR FABRICATING ANY MATERIAL.

PLAN
1"=30'

NOTES:

1. For General Notes and Index to Plans, see "INDEX TO PLANS" sheet.
2. For Hydrologic Summary, see "FOUNDATION PLAN" sheet.
3. For Sanitary Sewer Force Main (SSFM) details, see SANITARY SEWER PLANS.

(1) Paint Br. No. 36C0108
(2) Paint Bent Number
(3) California ST-75 Bridge Rail (Mod)
(4) California ST-75SW Bridge Rail (Mod)
(5) Closure pour (3'-0" wide)
(6) Polyester Concrete Overlay
(7) Structure Approach Type EQ(10) & R(10)
(8) PC/PS "I" Girder
(9) Slope Paving (Concrete)
(10) Deck Drainage
(11) Retaining Wall
(12) Reconstruct portion of Seawall
(13) 4"ø Gas Line in 6"ø casing (PG&E)
(14) Reconstruct 12"ø Water Line (City)
(15) PG&E Electrical in 6"ø casing
(16) Future Utility Opening
(17) Reset Structure Mounted Electrolier
(18) Sanitary Sewer Force Main (SSFM)
(19) SSFM Steel Truss Bridge (Spans 1-4)
(20) SSFM Vault
(21) Midwest Guardrail System, see ROAD PLANS

100% SUBMITTAL NOT FOR CONSTRUCTION

B-1

REGISTERED PROFESSIONAL ENGINEER CAMERON PINKERTON No. C 51-22 CIVIL STATE OF CALIFORNIA — DRAFT

REGISTERED ENGINEER – CIVIL

TRC Engineers or its officers or agents shall not be responsible for the accuracy or completeness of electronic copies of this plan sheet

CITY OF SANTA CRUZ

PREPARED FOR THE CITY OF SANTA CRUZ PUBLIC WORKS DEPARTMENT

	BY	CHECKED
DESIGN	C. PINKERTON	W. CULLUMBER
DETAILS	A. CARDOZA	W. CULLUMBER
QUANTITIES	C. PINKERTON	

ORIGINAL SCALE IN INCHES FOR REDUCED PLANS 0 1 2 3

TRC
MARK IMBRIANI
PROJECT MANAGER

BRIDGE NO. 36C0108
CONTRACT NO.
EA NO.

MURRAY STREET BRIDGE SEISMIC RETROFIT AND BARRIER REPLACEMENT
GENERAL PLAN

DISREGARD PRINTS BEARING EARLIER REVISION DATES
REVISION DATES (PRELIMINARY STAGE ONLY): 03-05-10 06-18-10 02-08-11 03-22-11 05-26-13 09-13-13 07-01-15 04-15-20 07-23-21

SCALE AS SHOWN
SHEET 113 OF 167
VAULT NO. XXXXXXX

Drawing name: H:\1161 – Santa Cruz\Murray Street Bridge Seismic Retrofit\001-GP-Revised elevations.dwg Layout Tab: Layout1 Oct 08,2021 – 8:48am gimbsen

LOAD AND RESISTANCE FACTOR DESIGN

DESIGN:

AASHTO LRFD Bridge Design Specifications, 8th edition
and the California Amendments preface dated January 2019.

SEISMIC DESIGN:

Caltrans Seismic Design Criteria (SDC), Version 2.0 dated
April 2019.

DEAD LOAD:

Includes 35 psf for future wearing surface.
Stay-in-place forms not allowed.

LIVE LOADING:

HL93 and permit design load.

SEISMIC LOADING:

Soil Profile Type F
Movement Magnitude: Mmax = 7.9
Peak Ground Acceleration 0.60
See Site Specific ARS Curve

STRUCTURAL STEEL:

Steel Plates:
ASTM A709, Grade 50
fy = 50,000 psi minimum

Tie Rods:
ASTM A449, Type 1
fy = 81,000 psi minimum

REINFORCED CONCRETE:

fy = 60 ksi
f'c = 3.6 ksi
n = 8

EXISTING CONCRETE:

fye = 44 ksi
f'ce = 5 ksi
n = 7

PRESTRESSED CONCRETE:

See Prestressing Notes on "PRECAST PRESTRESSED I GIRDER" sheet.

PILES:

See PILE DATA TABLE this sheet.

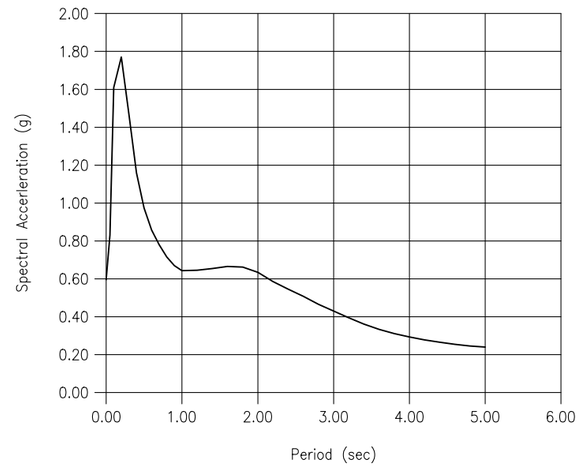

ARS CURVE

NOTES:

1. All drilled or cored holes to miss/avoid existing reinforcement.
2. All reinforcement must be pre-fabricated epoxy coated, except pile reinforcement.
3. Minimum concrete cover for all rebar must be 3" unless noted otherwise.

CALTRANS STANDARD PLANS DATED 2018

	A3A	ABBREVIATIONS (SHEET 1 OF 3)
	A3B	ABBREVIATIONS (SHEET 2 OF 3)
	A3C	ABBREVIATIONS (SHEET 3 OF 3)
	A10A	LINES AND SYMBOLS (SHEET 1 OF 5)
	A10B	LINES AND SYMBOLS (SHEET 2 OF 5)
	A10C	LINES AND SYMBOLS (SHEET 3 OF 5)
	A10D	LINES AND SYMBOLS (SHEET 4 OF 5)
	A10E	LINES AND SYMBOLS (SHEET 5 OF 5)
	A62B	LIMITS OF PAYMENT FOR EXCAVATION AND BACKFILL – BRIDGE SURCHARGE AND WALL
	A62C	LIMITS OF PAYMENT FOR EXCAVATION AND BACKFILL – BRIDGE
RSP	B0-1	BRIDGE DETAILS
	B0-3	BRIDGE DETAILS
	B0-5	BRIDGE DETAILS
	B0-13	BRIDGE DETAILS
	B6-1	T – BEAM DETAILS
	B6-10	UTILITY OPENINGS, T-BEAM
	B6-21	JOINT SEALS (MAXIMUM MOVEMENT RATING = 2")
	B7-5	DECK DRAINS
	B7-6	DECK DRAINS – TYPES D-1 AND D-2
RSP	B7-8	DECK DRAINAGE DETAILS
	B9-3	STRUCTURE APPROACH – TYPE R (10)
	B9-4	STRUCTURE APPROACH – TYPE EQ (10)

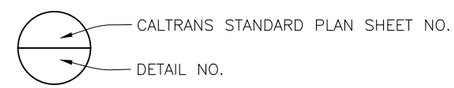

INDEX TO PLANS

SHEET NO.	TITLE
B-1	GENERAL PLAN
B-2	INDEX TO PLANS
B-3	FOUNDATION PLAN
B-4	ABUTMENT 1 LAYOUT
B-5	ABUTMENT 1 DETAILS NO. 1
B-6	ABUTMENT 1 DETAILS NO. 2
B-7	BENT 2 LAYOUT
B-8	BENT 3 LAYOUT
B-9	BENTS 2 & 3 DETAILS NO. 1
B-10	BENTS 2 & 3 DETAILS NO. 2
B-11	BENTS 2 & 3 DETAILS NO. 3
B-12	BENT 4 LAYOUT
B-13	BENT 4 DETAILS NO. 1
B-14	BENT 4 DETAILS NO. 2
B-15	BENT 4 DETAILS NO. 3
B-16	BENT 4 DETAILS NO. 4
B-17	BENTS 5 THRU 8 LAYOUT
B-18	BENTS 5 THRU 8 DETAILS NO. 1
B-19	BENTS 5 THRU 8 DETAILS NO. 2
B-20	BENTS 5 THRU 8 DETAILS NO. 3
B-21	BENT 9 AND ABUTMENT 10 LAYOUT
B-22	BENT 9 AND ABUTMENT 10 ELEVATION
B-23	BENT 9 LAYOUT NO. 1
B-24	BENT 9 LAYOUT NO. 2
B-25	BENT 9 DETAILS NO. 1
B-26	BENT 9 DETAILS NO. 2
B-27	BENT 9 DETAILS NO. 3
B-28	ABUTMENT 10 PARTIAL REMOVAL
B-29	ABUTMENT 10 PLAN & ELEVATION
B-30	ABUTMENT 10 DETAILS NO. 1
B-31	ABUTMENT 10 DETAILS NO. 2
B-32	ABUTMENT 10 DETAILS NO. 3
B-33	PILE DETAILS
B-34	FENDER DETAILS
B-35	TYPICAL SECTION
B-36	POLYESTER CONCRETE OVERLAY DETAILS
B-37	GIRDER LAYOUT
B-38	END DIAPHRAGM DETAILS
B-39	PC/PRETENSIONED I GIRDER (HARPED STRANDS)
B-40	PC/PRETENSIONED I GIRDER (MISC DETAILS)
B-41	DECK DRAIN DETAILS
B-42	CALIFORNIA ST-75 BRIDGE RAIL DETAILS NO. 1
B-43	CALIFORNIA ST-75 BRIDGE RAIL DETAILS NO. 2
B-44	CALIFORNIA ST-75 BRIDGE RAIL DETAILS NO. 3
B-45	CALIFORNIA ST-75 BRIDGE RAIL DETAILS NO. 4
B-46	CALIFORNIA ST-75SW BRIDGE RAIL DETAILS NO. 1
B-47	CALIFORNIA ST-75SW BRIDGE RAIL DETAILS NO. 2
B-48	CALIFORNIA ST-75SW BRIDGE RAIL DETAILS NO. 3
B-49	CALIFORNIA ST-75SW BRIDGE RAIL DETAILS NO. 4
B-50	SLOPE PAVING – FULL SLOPE DETAILS NO. 1
B-51	SLOPE PAVING – FULL SLOPE DETAILS NO. 2
B-52	SLOPE PAVING – FULL SLOPE DETAILS NO. 3
B-53	LOG OF TEST BORINGS NO. 1 OF 3
B-54	LOG OF TEST BORINGS NO. 2 OF 3
B-55	LOG OF TEST BORINGS NO. 3 OF 3

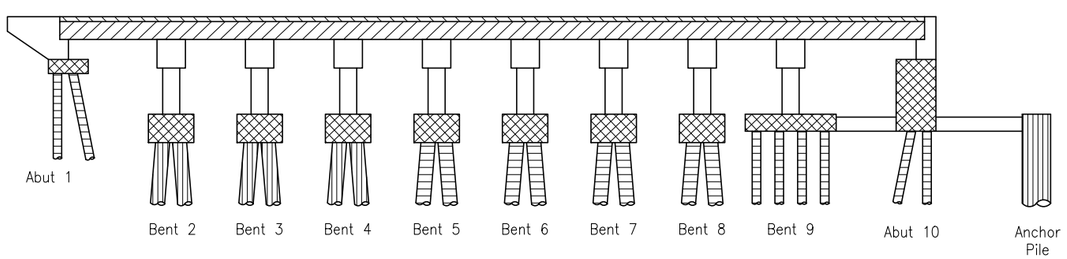

CONCRETE STRENGTH AND TYPE LIMITS

Not to Scale

- Structural Concrete, Bridge
- Structural Concrete, Bridge Footing
- Structural Concrete, Bridge (Polymer Fiber) (4,000 psi at 28 days)
- Precast Prestressed I Girders, see "PRECAST PRESTRESSED I GIRDER" sheet
- Cast-In-Drilled Hole Concrete Piling with Casing (4,000 psi at 28 days)
- Cast-In-Steel-Shell Concrete Pile (4,000 psi at 28 days)

NOTE:
THE CONTRACTOR SHALL VERIFY ALL CONTROLLING FIELD DIMENSIONS BEFORE ORDERING OR FABRICATING ANY MATERIAL.

PILE DATA TABLE

LOCATION	PILE TYPE	NOMINAL RESISTANCE (kips)		DESIGN TIP ELEVATIONS (ft)	SPECIFIED TIP ELEVATIONS (ft)	NOMINAL DRIVING RESISTANCE (kips)
		COMPRESSION	TENSION			
Abut 1 (S)	CISS NPS 16x0.5	140	0	2 (a), 2 (c), -3 (d)	-3	140
Abut 1 (N)	CISS NPS 16x0.5	140	0	2 (a), 2 (c), -3 (d)	-3	140
Bent 2 (S)	30"CIDH w PP30x0.625 casing	440	210	-85 (a), -74 (b), -91 '(c), -59 (d)	-91	n/a
Bent 3 (S)	30"CIDH w PP30x0.625 casing	440	210	-85 (a), -74 (b), -91 (c), -59 (d)	-91	n/a
Bent 3 (N)	CISS NPS 30x0.625	440	210	-64 (a), -77 (b), -64 '(c), -38 (d)	-77	n/a
Bent 4 (S)	30"CIDH w PP30x0.625 casing	360	100	-64 (a), -77 (b), -64 '(c), -38 (d)	-77	n/a
Bent 5 (S)	CISS NPS 30x0.625	440	210	-83 (a), -83 (c), -68 (d)	-83	n/a
Bent 5 (N)	CISS NPS 30x0.625	350	190	-58 (a), -58 (c), -68 (d)	-68	n/a
Bent 6 (S)	CISS NPS 30x0.625	440	210	-98 (a), -98 (c), -58 (d)	-98	550
Bent 6 (N)	CISS NPS 30x0.625	350	290	-88 (a), -84 (b), -88 (c), -58 (d)	-88	550
Bent 7 (S)	CISS NPS 30x0.625	440	210	-113 (a), -105 (b), -113 (c), -75 (d)	-113	550
Bent 7 (N)	CISS NPS 30x0.625	350	290	-103 (a), -103 (c), -75 (d)	-103	550
Bent 8 (S)	CISS NPS 30x0.625	440	210	-99 (a), -117 (b), -99 (c), -78 (d)	-117	440
Bent 8 (N)	CISS NPS 30x0.625	350	290	-103 (a), -103 (c), -78 (d)	-103	440
Bent 9 (S)	CISS NPS 16x0.5	210	40	-58 (a), -58 (c), -42 (d)	-58	270
Bent 9 (N)	CISS NPS 16x0.5	160	80	-88 (a), -88 (c), -42 (d)	-88	180
Abut 10 (S)	CISS NPS 16x0.5	190	0	-33 (a), -33 (c), -33 (d)	-33	220
Abut 10 (N)	CISS NPS 16x0.5	210	0	-53 (a), -53 (c), -53 (d)	-53	240
Abut 10 Anchor	96" CIDH	N/A	N/A	-18 (d)	-18	n/a

Notes:
1. Design tip elevations for Abutments and Bents are controlled by a) Compression, b) Tension, c) Settlement, d) Lateral load.
2. (N) and (S) designate piles at North and South side of Bents, respectively.

100% SUBMITTAL
NOT FOR CONSTRUCTION

B-2

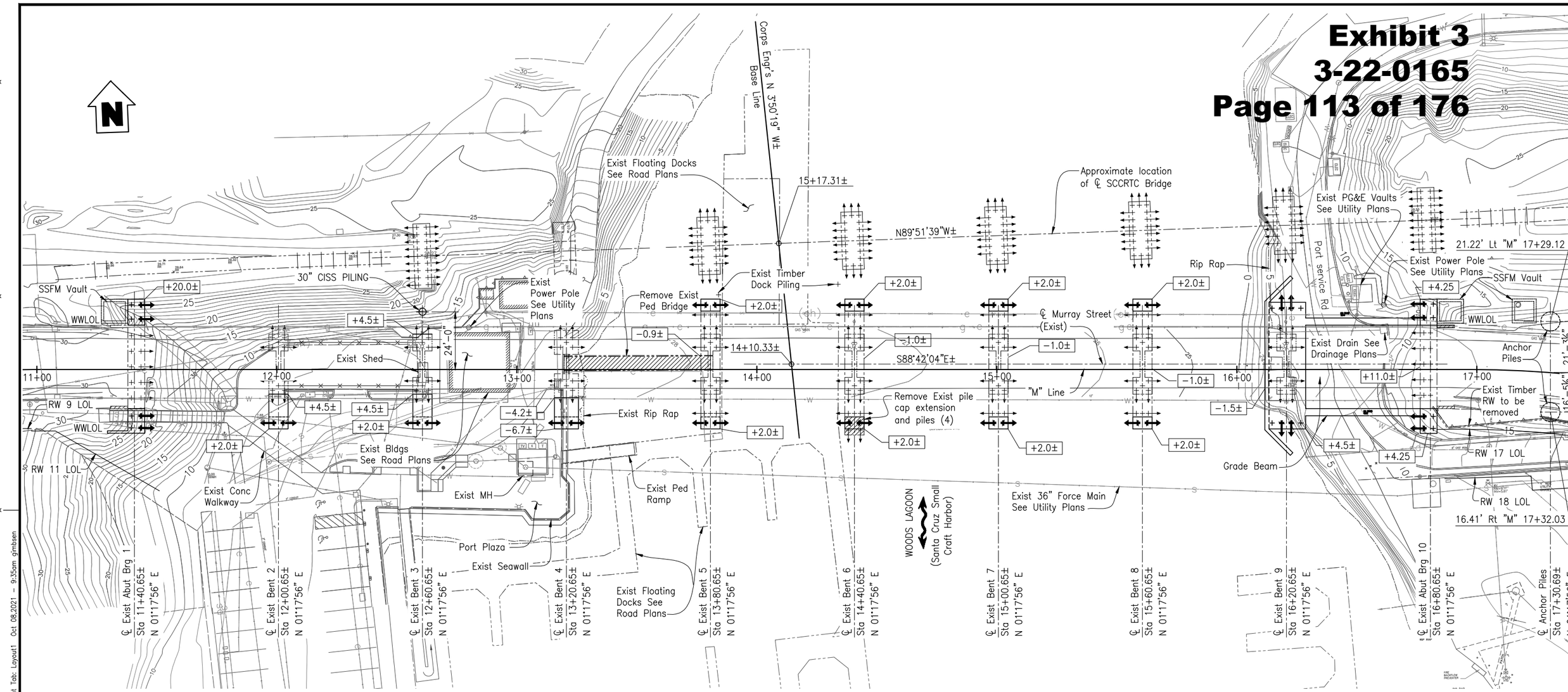

PLAN
1"=20'

BENCHMARK

SANTA CRUZ CITY BENCHMARK F6-16, A LEADPLUG AND TAG IN THE TOP OF THE CONCRETE CURB AT THE EASTERN SIDE OF OWEN STREET AT ITS INTERSECTION WITH HALL STREET. ELEVATION 50.85 FEET (NGVD 29).

HYDROLOGIC SUMMARY

DRAINAGE AREA: 3.3 SQUARE MILES

	CORP DESIGN FLOOD	CORP BASE FLOOD	FLOOD OF RECORD
FREQUENCY (YEARS)	50	100	NA
DISCHARGE (CUBIC FEET PER SECOND)	1,390	1,650	NA
WATER SURFACE (ELEVATION AT BRIDGE)	11.4	13.3	NA

LEGEND:

- +2.0± Indicates bottom of footing
- + Indicates Exist Vertical Pile
- + Indicates New Vertical Pile
- Indicates Exist Battered Pile
- Indicates New Battered Pile
- Indicates Existing Structure
- Indicates New Structure
- Indicates Direction of flow
- Indicates Bridge Removal (Portion)

NOTES:

1. Elevations are based on NGVD 29 datum. Mean Lower Low Water datum is approximately 2.7± below NGVD 29.
2. Roadways and curbs not shown, see ROAD PLANS.
3. See UTILITY PLANS for utilities not shown.
4. Contour lines around Bent 9 are shown prior to scour caused by the 2011 Japanese Tsunami. Current ground level surfaces are represented in section views contained on Bent 9 detail sheets.
5. See SEWER PLANS for vault details.

NOTE:
THE CONTRACTOR SHALL VERIFY ALL CONTROLLING FIELD DIMENSIONS BEFORE ORDERING OR FABRICATING ANY MATERIAL.

100% SUBMITTAL NOT FOR CONSTRUCTION

B-3

REGISTERED PROFESSIONAL ENGINEER CAMERON PINKERTON No. C 51-22 CIVIL STATE OF CALIFORNIA — DRAFT — REGISTERED ENGINEER – CIVIL

TRC Engineers or its officers or agents shall not be responsible for the accuracy or completeness of electronic copies of this plan sheet

CITY OF SANTA CRUZ

PREPARED FOR THE CITY OF SANTA CRUZ PUBLIC WORKS DEPARTMENT

DESIGN	BY C. PINKERTON	CHECKED W. CULLUMBER	
DETAILS	BY G. IMBSEN	CHECKED W. CULLUMBER	
QUANTITIES	BY C. PINKERTON	CHECKED	
ORIGINAL SCALE IN INCHES FOR REDUCED PLANS	0 1 2 3		

TRC
MARK IMBRIANI
PROJECT MANAGER

BRIDGE NO. 36C0108
CONTRACT NO.
EA NO.

MURRAY STREET BRIDGE SEISMIC RETROFIT AND BARRIER REPLACEMENT
FOUNDATION PLAN

DISREGARD PRINTS BEARING EARLIER REVISION DATES
REVISION DATES (PRELIMINARY STAGE ONLY): 03-05-10 06-18-10 03-22-11 05-28-13 09-13-13 07-01-15 04-17-20 07-23-21

SCALE AS SHOWN
SHEET 115 OF 167
VAULT NO. XXXXXXX

Drawing name: H:\1161 – Santa Cruz\Murray Street Bridge Seismic Retrofit\003-FP.dwg Layout Tab: Layout1 Oct 08,2021 – 9:35am gimbsen

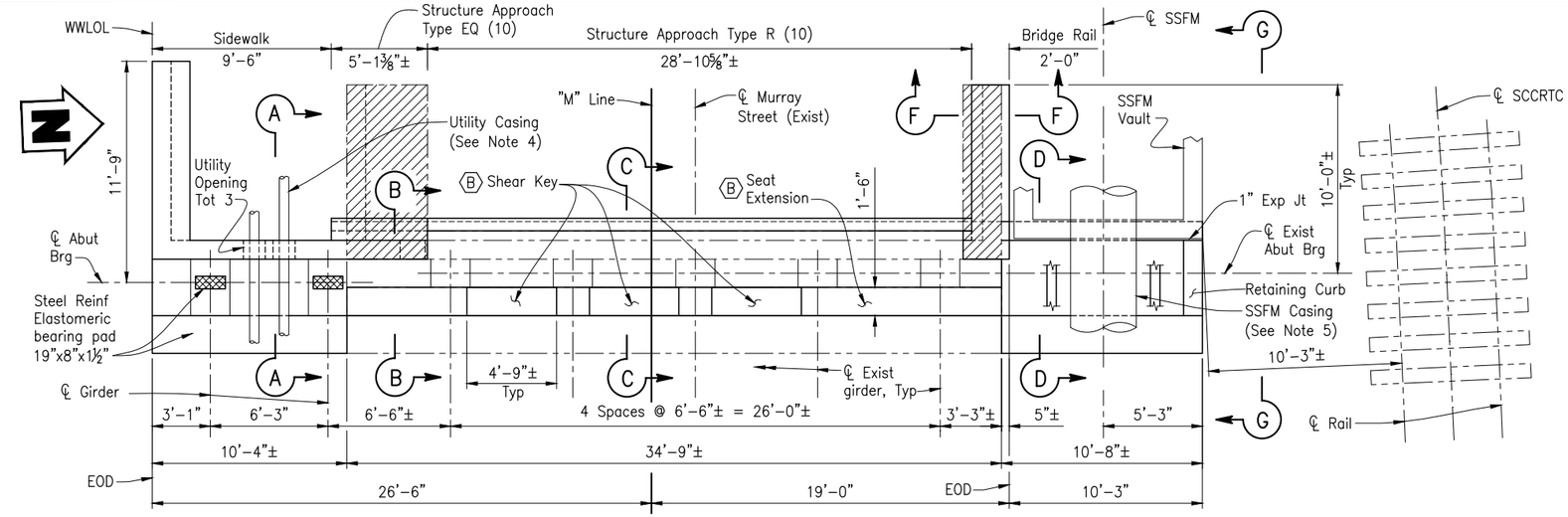

PLAN
1/4"=1'-0"

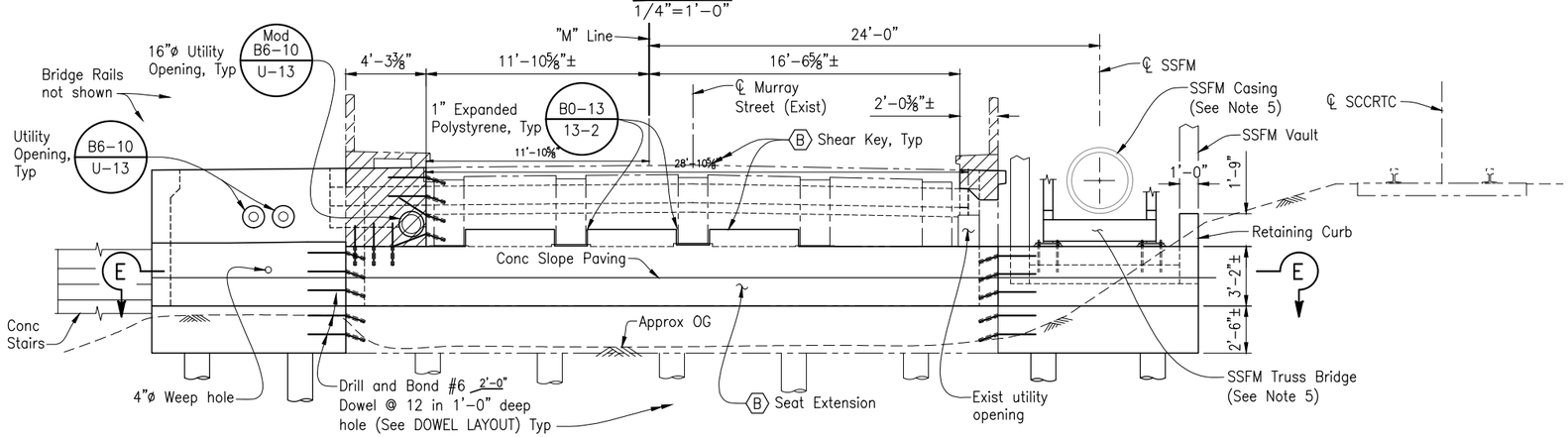

ELEVATION
1/4"=1'-0"

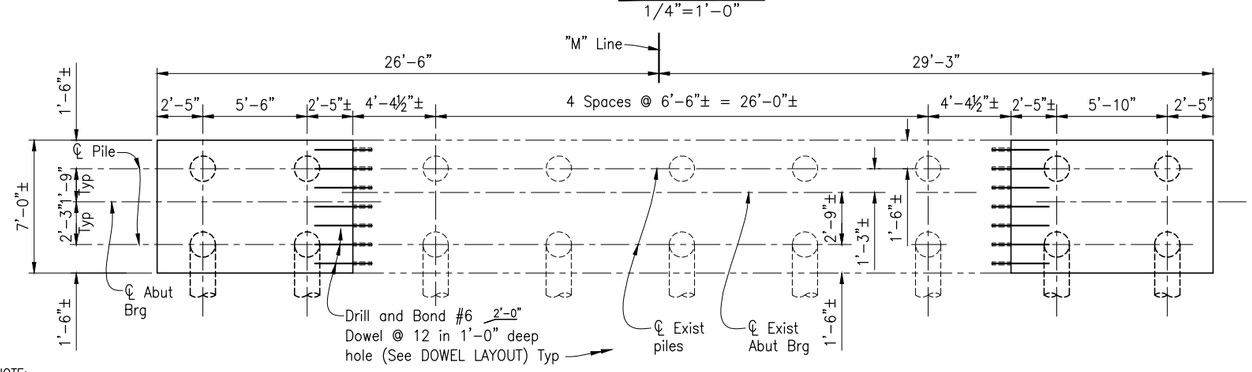

FOOTING - PLAN
1/4"=1'-0"

NOTE:
THE CONTRACTOR SHALL VERIFY ALL CONTROLLING FIELD DIMENSIONS BEFORE ORDERING OR FABRICATING ANY MATERIAL.

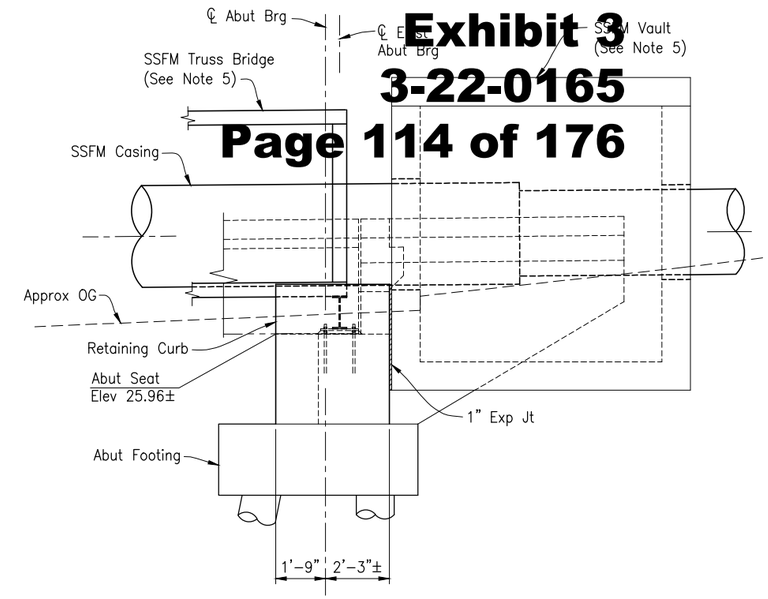

VIEW G-G
3/8"=1'-0"

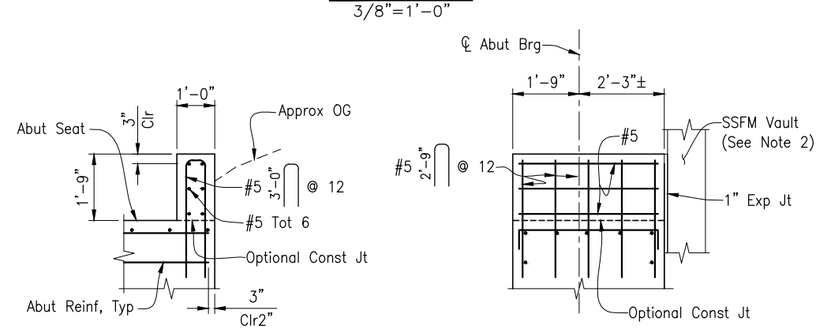

ELEVATION

SIDE VIEW

RETAINING CURB
1/2"=1'-0"

NOTES:

1. For SECTIONS A–A thru D–D and DOWEL LAYOUT, see "ABUTMENT 1 DETAILS NO. 1" sheet.
2. For SECTIONS E–E & F–F, WINGWALL ELEVATION and BEARING PAD DETAILS, see "ABUTMENT 1 DETAILS NO. 2" sheet.
3. The Contractor shall protect existing reinforcement.
4. Casings to extend to Joint Utility Trench. For casing sizes, see "TYPICAL SECTION" sheet.
5. For Sanitary Sewer Force Main (SSFM) details, see SANITARY SEWER PLANS.

RETROFIT LEGEND:

(B) Shear Key and Seat Extensioin

LEGEND:

- - - - Indicates Existing Structure
——— Indicates New Structure
▨ Indicates Bridge Removal (Portion)

100% SUBMITTAL NOT FOR CONSTRUCTION

B-4

REGISTERED PROFESSIONAL ENGINEER CAMERON PINKERTON No. C 51-22 CIVIL STATE OF CALIFORNIA
REGISTERED ENGINEER – CIVIL
TRC Engineers or its officers or agents shall not be responsible for the accuracy or completeness of electronic copies of this plan sheet

CITY OF SANTA CRUZ

PREPARED FOR THE
CITY OF SANTA CRUZ
PUBLIC WORKS DEPARTMENT

DESIGN	BY C. PINKERTON	CHECKED W. CULLUMBER
DETAILS	BY A. CARDOZA	CHECKED W. CULLUMBER
QUANTITIES	BY C. PINKERTON	CHECKED

ORIGINAL SCALE IN INCHES FOR REDUCED PLANS 0 1 2 3

TRC
MARK IMBRIANI
PROJECT MANAGER

BRIDGE NO. 36C0108
CONTRACT NO.
EA NO.

MURRAY STREET BRIDGE SEISMIC RETROFIT AND BARRIER REPLACEMENT
ABUTMENT 1 LAYOUT

DISREGARD PRINTS BEARING EARLIER REVISION DATES
REVISION DATES (PRELIMINARY STAGE ONLY): 03-25-11 05-26-13 09-13-13 07-01-15 03-17-20 07-23-21

SCALE AS SHOWN
SHEET 116 OF 167
VAULT NO. XXXXXXX

Drawing name: H:\1161 – Santa Cruz\Murray Street Bridge Seismic Retrofit\004-ABUT 1 Layout.dwg Layout Tab: Layout1 Oct 08,2021 – 9:33am gilnbsen

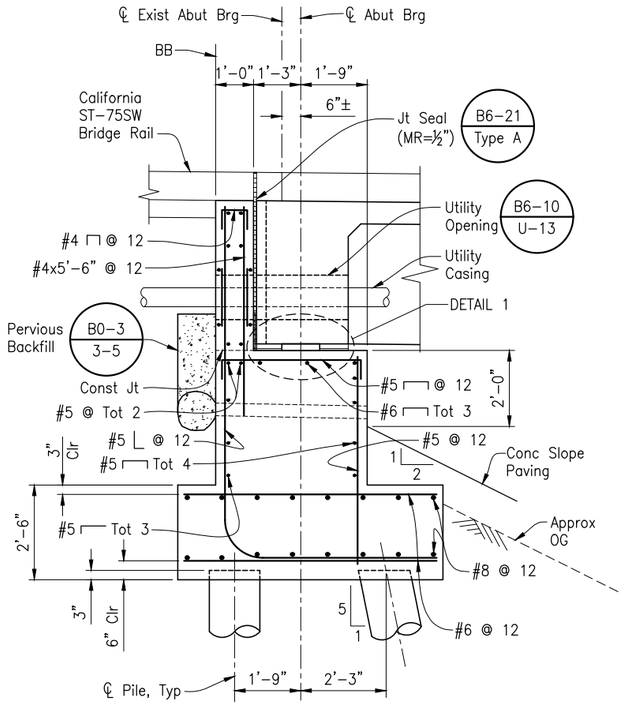

SECTION A-A
1/2"=1'-0"

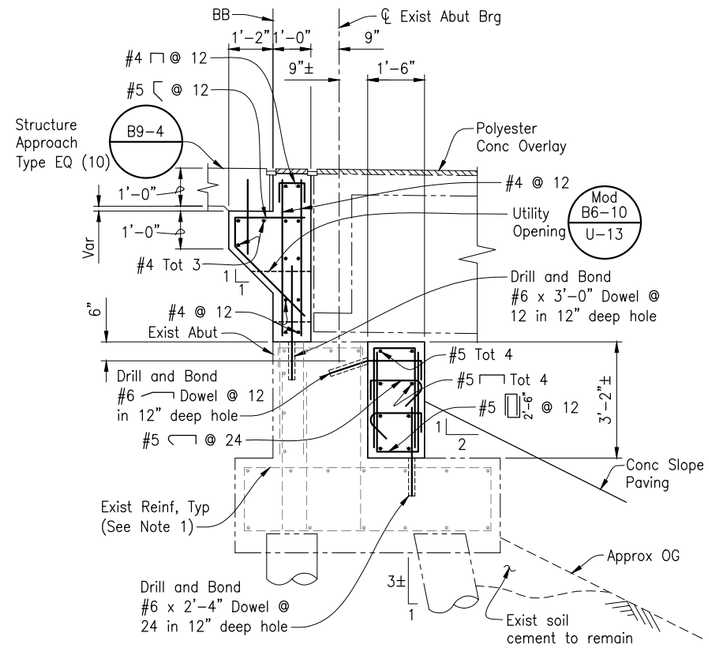

SECTION B-B
1/2"=1'-0"

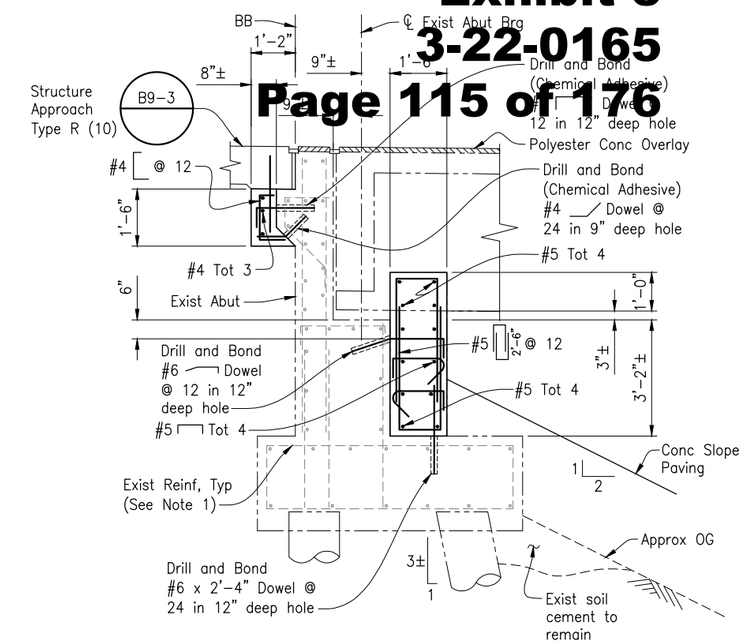

SECTION C-C
1/2"=1'-0"

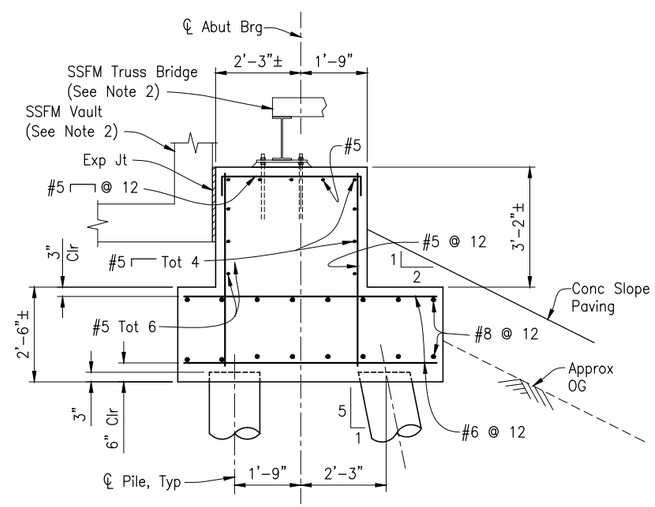

SECTION D-D
1/2"=1'-0"

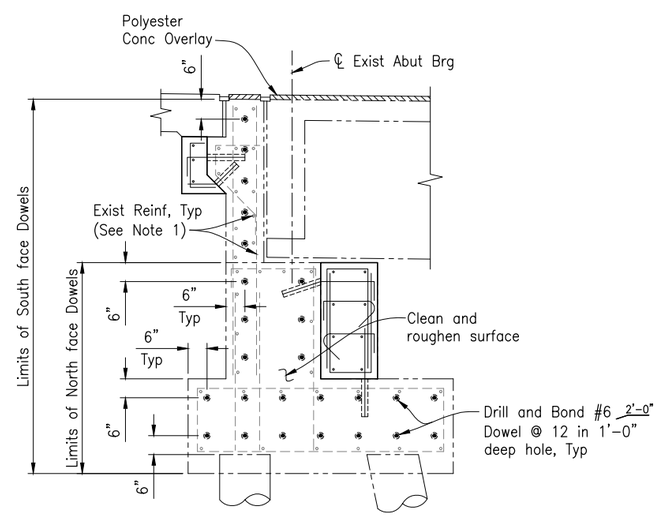

See Section B-B and Section C-C for details not shown

DOWEL LAYOUT
1/2"=1'-0"

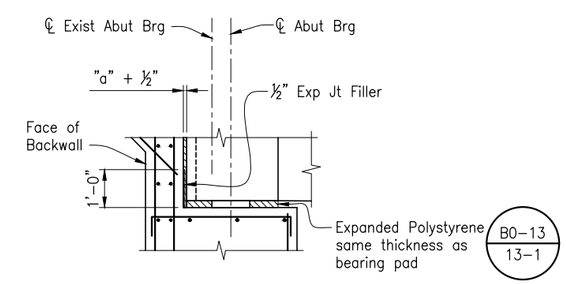

DETAIL 1
1/2"=1'-0"

LEGEND:

- Indicates Existing Structure
- Indicates New Structure

NOTES:

1. The Contractor shall protect existing reinforcement.
2. For Sanitary Sewer Force Main (SSFM) details, see SANITARY SEWER PLANS.

NOTE:
THE CONTRACTOR SHALL VERIFY ALL CONTROLLING FIELD DIMENSIONS BEFORE ORDERING OR FABRICATING ANY MATERIAL.

100% SUBMITTAL NOT FOR CONSTRUCTION

B-5

Drawing name: H:\1161 - Santa Cruz\Murray Street Bridge Seismic Retrofit\005-ABUT 1-Details_1.dwg Layout Tab: Layout1 Oct 08,2021 - 9:18am gimbsen

REGISTERED PROFESSIONAL ENGINEER CAMERON PINKERTON No. 6[illegible] Exp. 31-22 CIVIL STATE OF CALIFORNIA — REGISTERED ENGINEER – CIVIL

TRC Engineers or its officers or agents shall not be responsible for the accuracy or completeness of electronic copies of this plan sheet

CITY OF SANTA CRUZ

PREPARED FOR THE CITY OF SANTA CRUZ PUBLIC WORKS DEPARTMENT

	BY	CHECKED
DESIGN	C. PINKERTON	W. CULLUMBER
DETAILS	A. CARDOZA	W. CULLUMBER
QUANTITIES	C. PINKERTON	

ORIGINAL SCALE IN INCHES FOR REDUCED PLANS 0 1 2 3

TRC
MARK IMBRIANI
PROJECT MANAGER

BRIDGE NO. 36C0108
CONTRACT NO.
EA NO.

MURRAY STREET BRIDGE
SEISMIC RETROFIT AND BARRIER REPLACEMENT
ABUTMENT 1 DETAILS NO. 1

DISREGARD PRINTS BEARING EARLIER REVISION DATES — REVISION DATES (PRELIMINARY STAGE ONLY): 03-22-11 05-28-13 09-13-13 07-01-15 03-19-20 07-23-21

SCALE AS SHOWN
SHEET 117 OF 167
VAULT NO. XXXXXXX

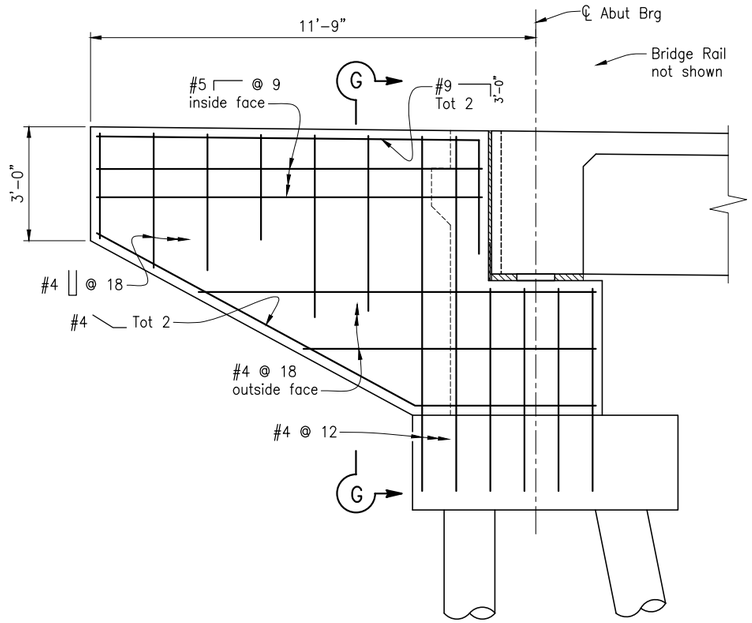

WINGWALL ELEVATION
1/2"=1'-0"

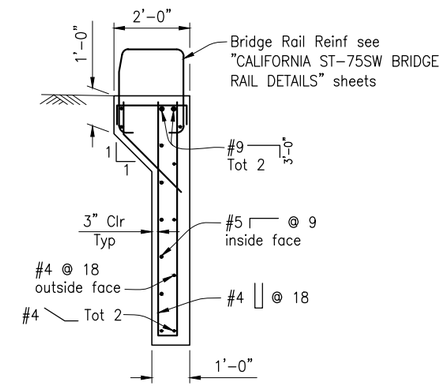

SECTION G-G
1/2"=1'-0"

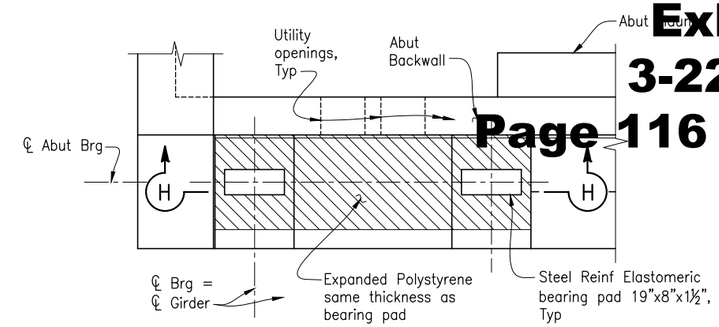

PLAN

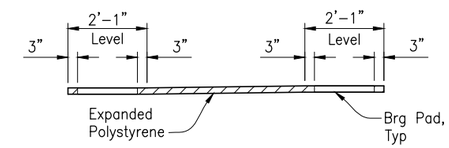

SECTION H-H

BEARING PAD DETAILS
1/2"=1'-0"

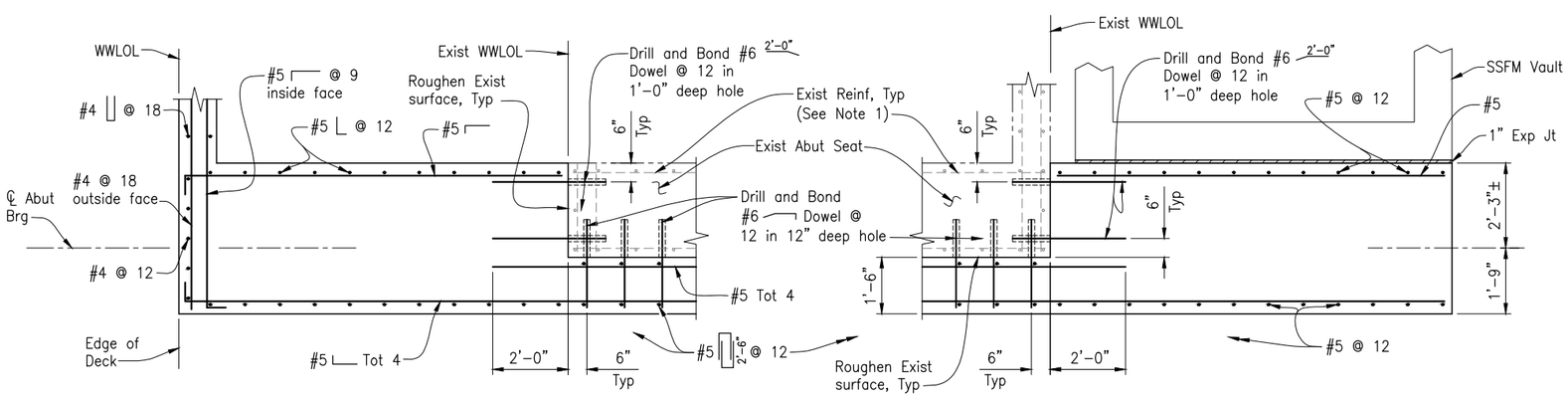

SECTION E-E
1/2"=1'-0"

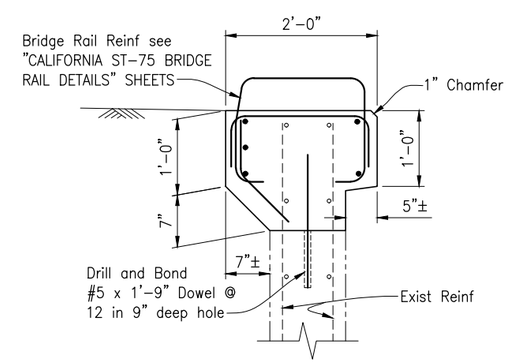

SECTION F-F
1"=1'-0"

NOTE:
THE CONTRACTOR SHALL VERIFY ALL CONTROLLING FIELD DIMENSIONS BEFORE ORDERING OR FABRICATING ANY MATERIAL.

100% SUBMITTAL
NOT FOR CONSTRUCTION

B-6

REGISTERED PROFESSIONAL ENGINEER CAMERON PINKERTON No. 73158 Exp. 03-31-22 CIVIL STATE OF CALIFORNIA

REGISTERED ENGINEER – CIVIL

TRC Engineers or its officers or agents shall not be responsible for the accuracy or completeness of electronic copies of this plan sheet

CITY OF SANTA CRUZ

PREPARED FOR THE
CITY OF SANTA CRUZ
PUBLIC WORKS DEPARTMENT

DESIGN	BY C. PINKERTON	CHECKED W. CULLUMBER
DETAILS	BY A. CARDOZA	CHECKED W. CULLUMBER
QUANTITIES	BY C. PINKERTON	CHECKED

ORIGINAL SCALE IN INCHES FOR REDUCED PLANS 0 1 2 3

TRC
MARK IMBRIANI
PROJECT MANAGER

BRIDGE NO. 36C0108
CONTRACT NO.
EA NO.

MURRAY STREET BRIDGE
SEISMIC RETROFIT AND BARRIER REPLACEMENT
ABUTMENT 1 DETAILS NO. 2

DISREGARD PRINTS BEARING EARLIER REVISION DATES

REVISION DATES (PRELIMINARY STAGE ONLY)
03-22-11 05-28-13 09-13-13 07-01-15 03-19-20 07-23-21

SCALE AS SHOWN
SHEET 118 OF 167
VAULT NO. XXXXXXX

Drawing name: H:\1161 – Santa Cruz\Murray Street Bridge Seismic Retrofit\006-ABUT 1-Details 2.dwg Layout Tab: Layout1 Oct 08,2021 – 9:37am gimbsen

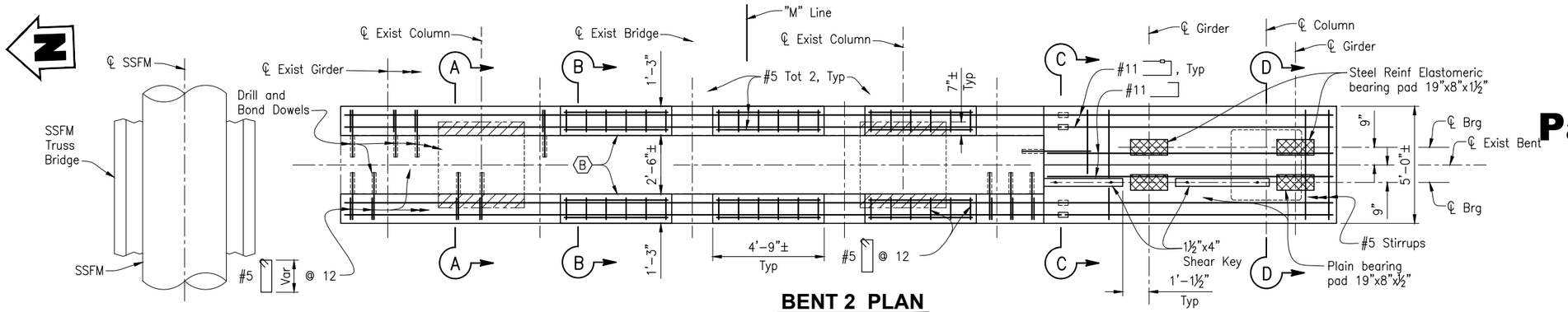

BENT 2 PLAN

3/8"=1'-0"

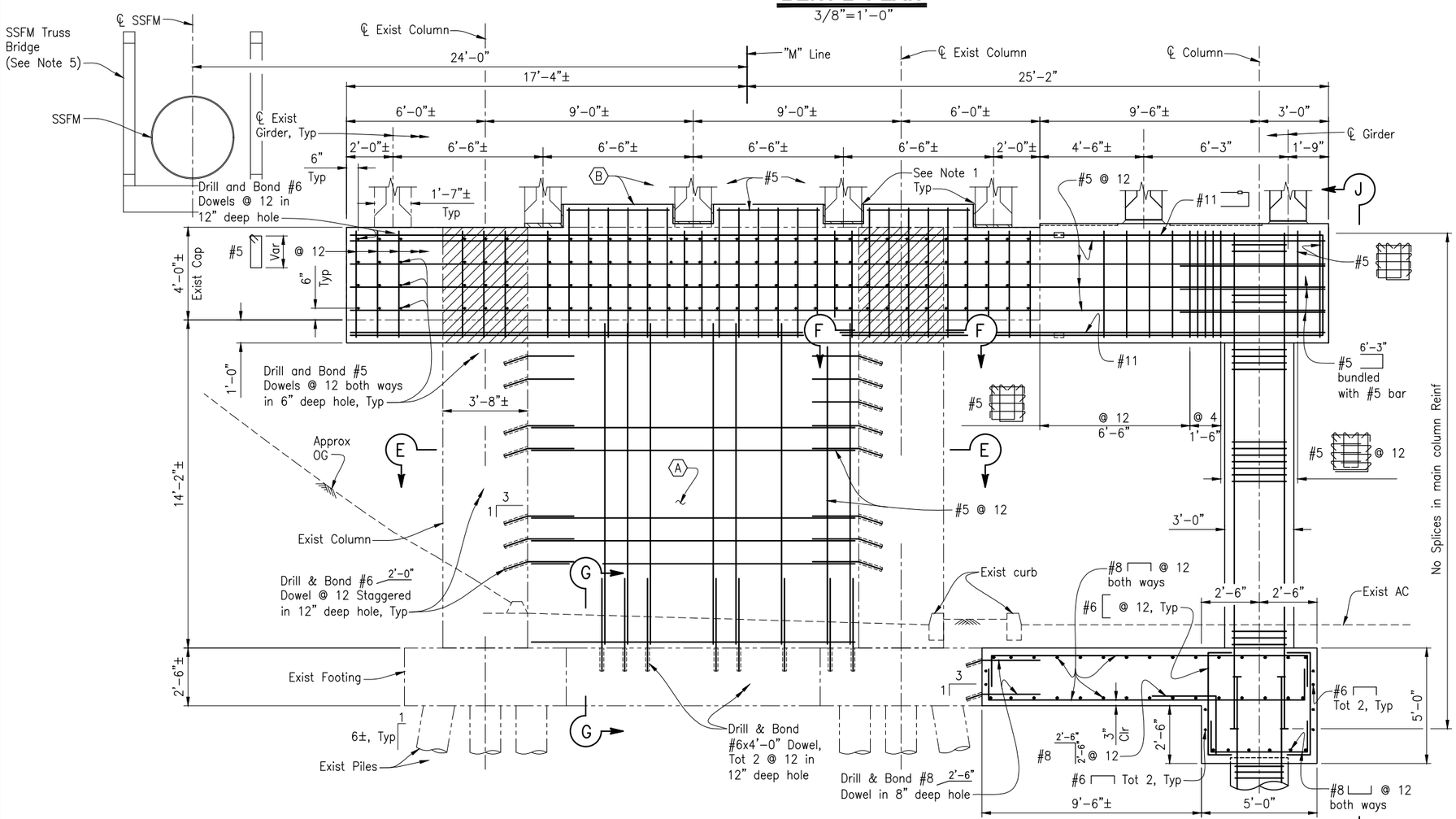

BENT 2 ELEVATION

3/8"=1'-0"

NOTES:

1. 1" Expanded Polystyrene (B0-13 / 13-2)
2. For SECTION A-A thru D-D, see "BENTS 2 & 3 DETAILS NO. 1" sheet.
3. For SECTION E-E thru G-G, see "BENTS 2 & 3 DETAILS NO. 2" sheet.
4. For ELEVATION J-J see "BENTS 2 & 3 DETAILS NO. 3" sheet.
5. For Sanitary Sewer Force Main (SSFM) details, see SANITARY SEWER PLANS.

LEGEND:

- Indicates Existing Structure
- Indicates New Structure
- Indicates Bridge Removal (Portion)
- Indicates Mechanical Butt Splice (Alternate splice location)

RETROFIT LEGEND:

- (A) Concrete Infill Wall
- (B) Shear Key and Seat Extension

NOTE:
THE CONTRACTOR SHALL VERIFY ALL CONTROLLING FIELD DIMENSIONS BEFORE ORDERING OR FABRICATING ANY MATERIAL.

100% SUBMITTAL
NOT FOR CONSTRUCTION

B-7

REGISTERED PROFESSIONAL ENGINEER CAMERON PINKERTON No. 36C0108 Exp. 06-31-22 CIVIL STATE OF CALIFORNIA

REGISTERED ENGINEER – CIVIL

TRC Engineers or its officers or agents shall not be responsible for the accuracy or completeness of electronic copies of this plan sheet

CITY OF SANTA CRUZ

PREPARED FOR THE
CITY OF SANTA CRUZ
PUBLIC WORKS DEPARTMENT

DESIGN	BY C. PINKERTON	CHECKED W. CULLUMBER
DETAILS	BY A. CARDOZA	CHECKED W. CULLUMBER
QUANTITIES	BY C. PINKERTON	CHECKED

ORIGINAL SCALE IN INCHES FOR REDUCED PLANS 0 1 2 3

TRC
MARK IMBRIANI
PROJECT MANAGER

BRIDGE NO. 36C0108
CONTRACT NO.
EA NO.

MURRAY STREET BRIDGE
SEISMIC RETROFIT AND BARRIER REPLACEMENT
BENT 2 LAYOUT

DISREGARD PRINTS BEARING EARLIER REVISION DATES
REVISION DATES (PRELIMINARY STAGE ONLY) 03-22-11 09-13-13 07-01-15 03-10-20 07-23-21

SCALE AS SHOWN
SHEET 119 OF 167
VAULT NO. XXXXXXX

Drawing name: H:\1161 – Santa Cruz\Murray Street Bridge Seismic Retrofit\007-Bent 2 Layout.dwg Layout Tab: Layout1 Oct 08,2021 – 9:27am gimbsen

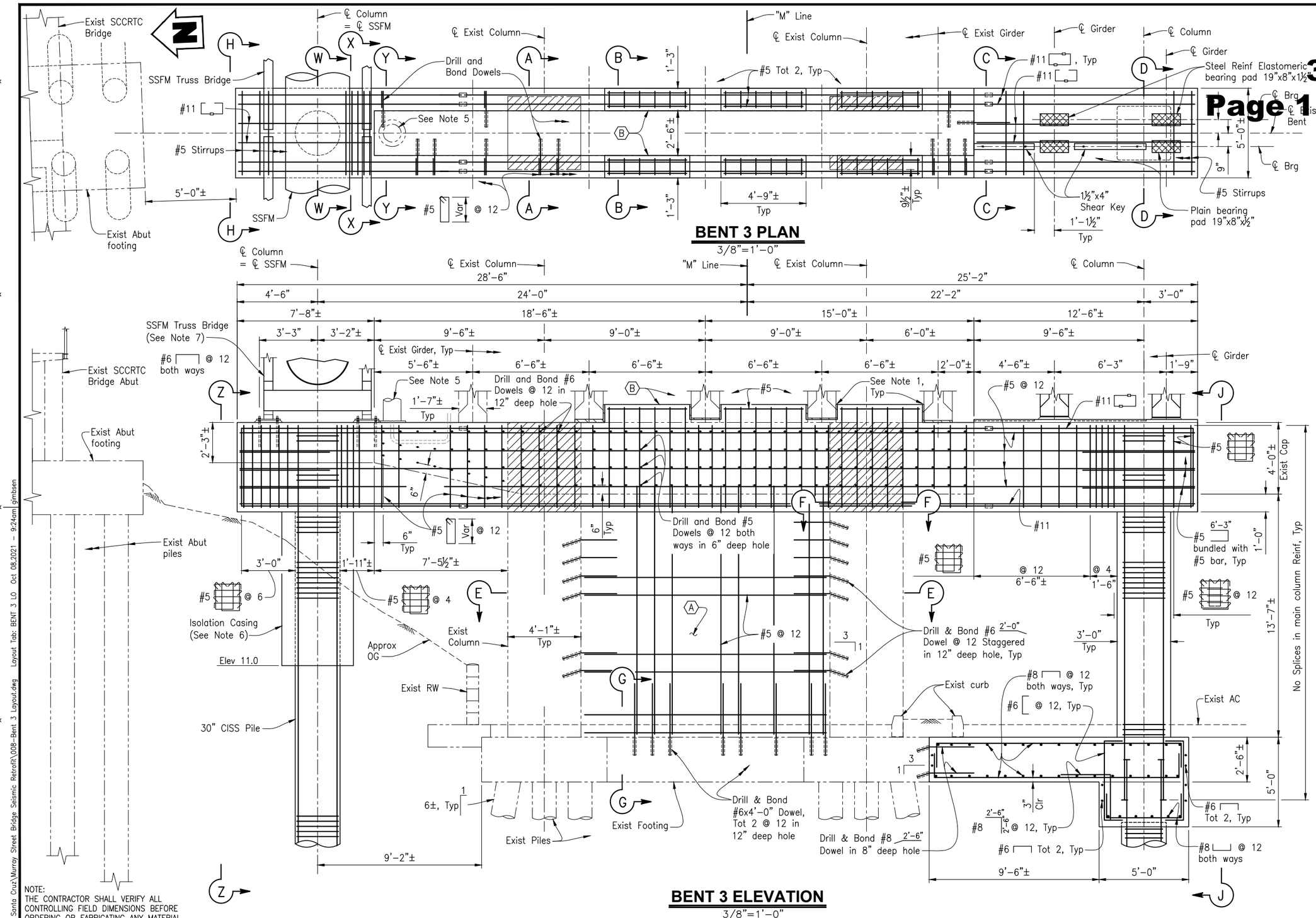

NOTE:
THE CONTRACTOR SHALL VERIFY ALL CONTROLLING FIELD DIMENSIONS BEFORE ORDERING OR FABRICATING ANY MATERIAL.

BENT 3 ELEVATION
3/8"=1'-0"

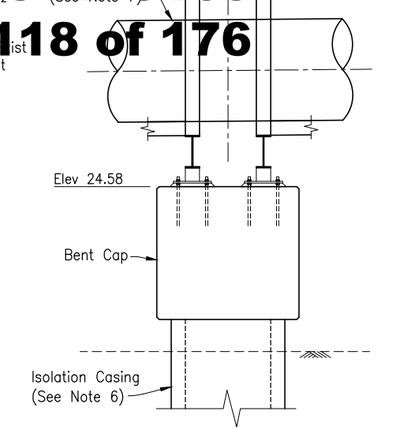

VIEW H-H
3/8"=1'-0"

NOTES:

1. 1" Expanded Polystyrene (B0-13 / 13-2)
2. For SECTION A-A thru D-D, W-W thru Y-Y, see "BENTS 2 & 3 DETAILS NO. 1" sheet.
3. For SECTION E-E thru G-G, see "BENTS 2 & 3 DETAILS NO. 2" sheet.
4. For ELEVATION J-J & Z-Z see "BENTS 2 & 3 DETAILS NO. 3" sheet.
5. Reset Structure Mounted Electrolier.
6. For isolation casing details, see "BENTS 2 & 3 DETAILS NO. 2" sheet.
7. For Sanitary Sewer Force Main (SSFM) details, see SANITARY SEWER PLANS.

LEGEND:

- Indicates Existing Structure
- Indicates New Structure
- Indicates Bridge Removal (Portion)
- Indicates Mechanical Butt Splice (Alternate splice location)

RETROFIT LEGEND:

- (A) Concrete Infill Wall
- (B) Shear Key and Seat Extension

100% SUBMITTAL NOT FOR CONSTRUCTION

B-8

REGISTERED PROFESSIONAL ENGINEER — CAMERON PINKERTON — No. C 51-22 — CIVIL — STATE OF CALIFORNIA — DRAFT

REGISTERED ENGINEER – CIVIL

TRC Engineers or its officers or agents shall not be responsible for the accuracy or completeness of electronic copies of this plan sheet

CITY OF SANTA CRUZ

PREPARED FOR THE
CITY OF SANTA CRUZ
PUBLIC WORKS DEPARTMENT

DESIGN	BY C. PINKERTON	CHECKED W. CULLUMBER
DETAILS	BY G. IMBSEN	CHECKED W. CULLUMBER
QUANTITIES	BY C. PINKERTON	CHECKED

ORIGINAL SCALE IN INCHES FOR REDUCED PLANS 0 1 2 3

TRC
MARK IMBRIANI
PROJECT MANAGER

BRIDGE NO. 36C0108
CONTRACT NO.
EA NO.

MURRAY STREET BRIDGE
SEISMIC RETROFIT AND BARRIER REPLACEMENT
BENT 3 LAYOUT

DISREGARD PRINTS BEARING EARLIER REVISION DATES → 03-16-20 07-01-21
REVISION DATES (PRELIMINARY STAGE ONLY)

SCALE AS SHOWN
SHEET 120 OF 167
VAULT NO. XXXXXXX

Drawing name: H:\1161 – Santa Cruz\Murray Street Bridge Seismic Retrofit\008-Bent 3 Layout.dwg Layout Tab: BENT 3 LO Oct 08,2021 – 9:24am gimbsen

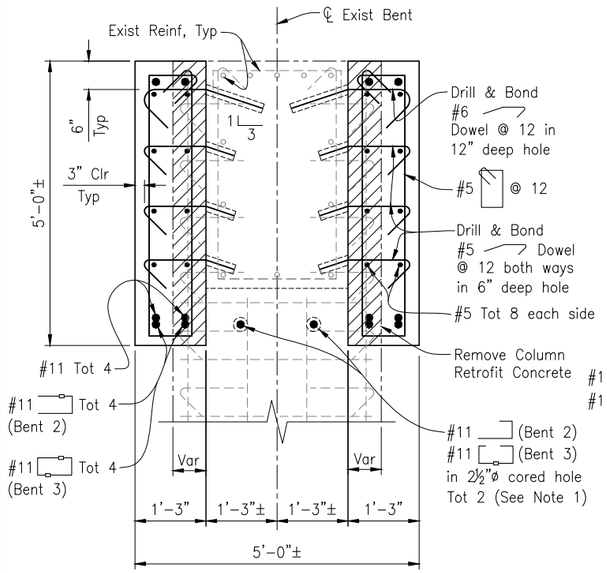

SECTION A-A
3/4"=1'-0"

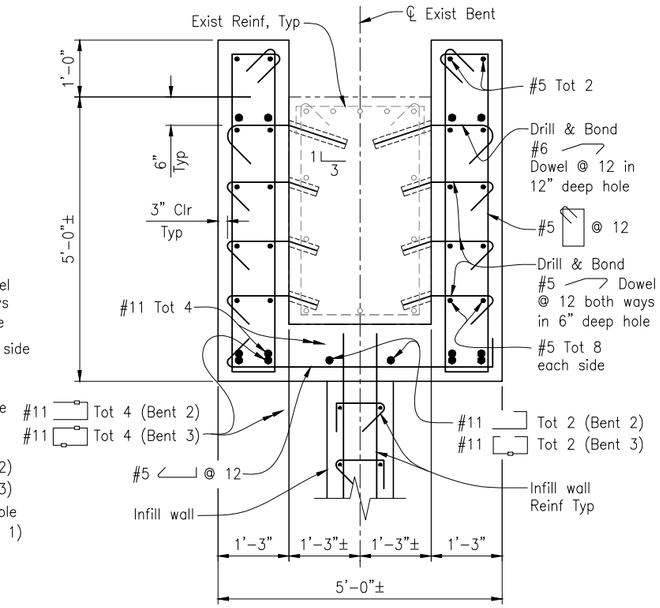

SECTION B-B
3/4"=1'-0"

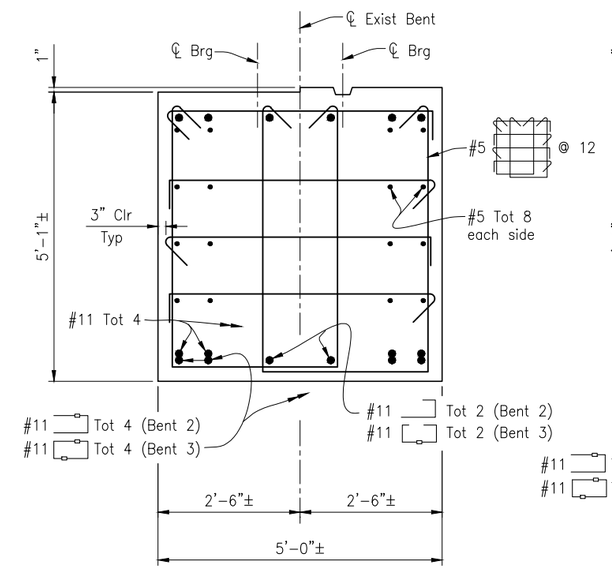

SECTION C-C
3/4"=1'-0"

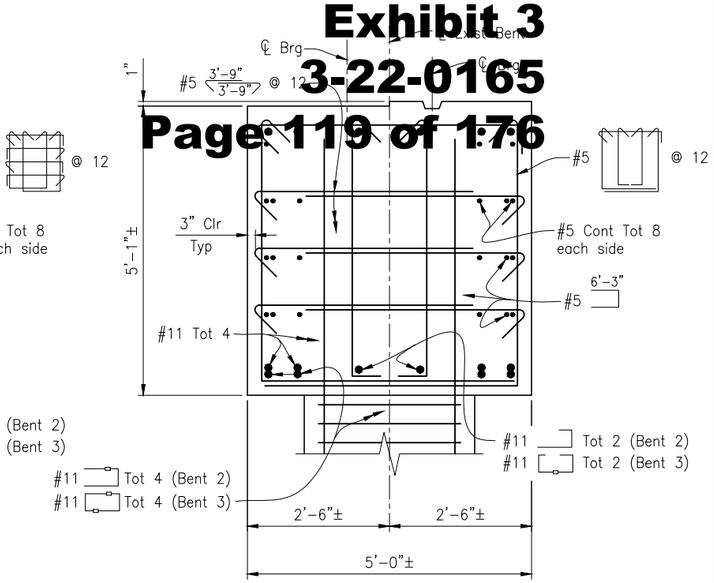

SECTION D-D
3/4"=1'-0"

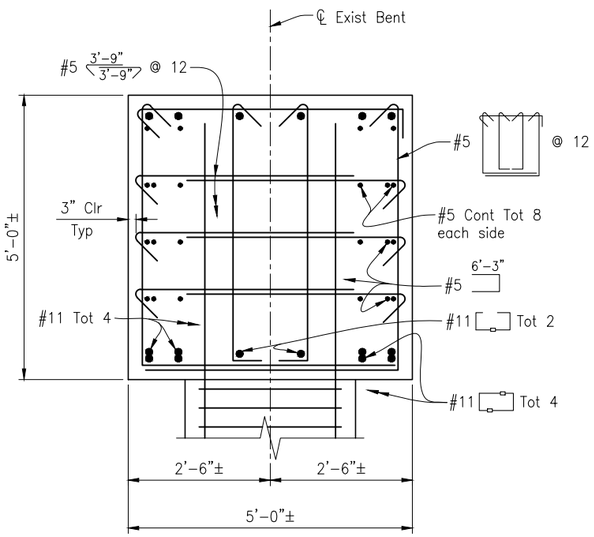

BENT 3 ONLY

SECTION W-W
3/4"=1'-0"

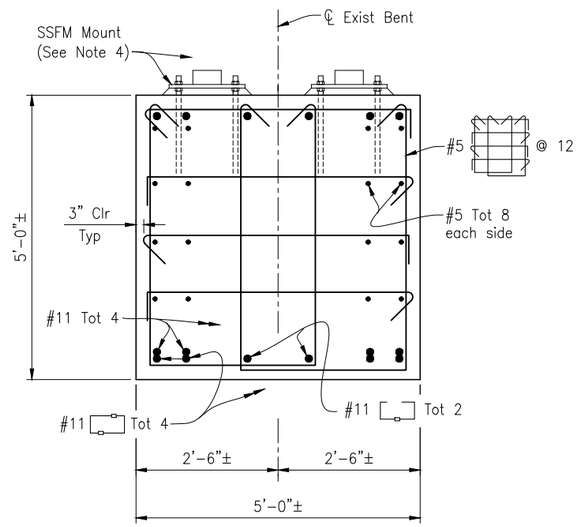

BENT 3 ONLY

SECTION X-X
3/4"=1'-0"

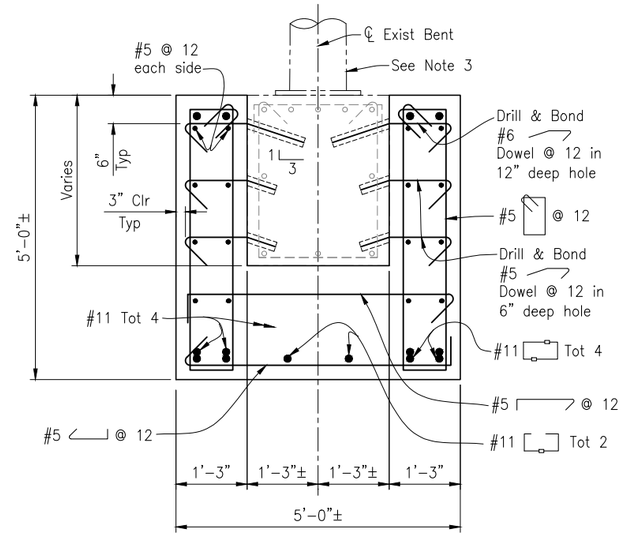

BENT 3 ONLY

SECTION Y-Y
3/4"=1'-0"

NOTES:

1. Holes cored through existing column to miss existing reinforcement. Pressure grout bars in cored holes.
2. The Contractor must protect existing reinforcement.
3. Reset Structure Mounted Electrolier
4. For Sanitary Sewer Force Main (SSFM) details, see SANITARY SEWER PLANS.

LEGEND:

- Indicates Existing Structure
- Indicates New Structure
- Indicates Bridge Removal (Portion)

NOTE:
THE CONTRACTOR SHALL VERIFY ALL CONTROLLING FIELD DIMENSIONS BEFORE ORDERING OR FABRICATING ANY MATERIAL.

100% SUBMITTAL NOT FOR CONSTRUCTION

B-9

REGISTERED PROFESSIONAL ENGINEER CAMERON PINKERTON No. 73031 Exp. 06-31-22 CIVIL STATE OF CALIFORNIA

REGISTERED ENGINEER – CIVIL

TRC Engineers or its officers or agents shall not be responsible for the accuracy or completeness of electronic copies of this plan sheet

CITY OF SANTA CRUZ

PREPARED FOR THE
CITY OF SANTA CRUZ
PUBLIC WORKS DEPARTMENT

DESIGN	BY C. PINKERTON	CHECKED W. CULLUMBER
DETAILS	BY A. CARDOZA	CHECKED W. CULLUMBER
QUANTITIES	BY C. PINKERTON	CHECKED
ORIGINAL SCALE IN INCHES FOR REDUCED PLANS	0 1 2 3	

TRC
MARK IMBRIANI
PROJECT MANAGER

BRIDGE NO. 36C0108
CONTRACT NO.
EA NO.

MURRAY STREET BRIDGE
SEISMIC RETROFIT AND BARRIER REPLACEMENT
BENTS 2 & 3 DETAILS NO. 1

DISREGARD PRINTS BEARING EARLIER REVISION DATES
REVISION DATES (PRELIMINARY STAGE ONLY) 03-22-11 05-26-13 09-13-13 07-01-15 03-10-20 07-28-21

SCALE AS SHOWN
SHEET 121 OF 167
VAULT NO. XXXXXXX

Drawing name: H:\1161 – Santa Cruz\Murray Street Bridge Seismic Retrofit\009-Bent 2-3-Det-1.dwg Layout Tab: Layout1 Aug 27,2021 – 2:31pm ACardoza

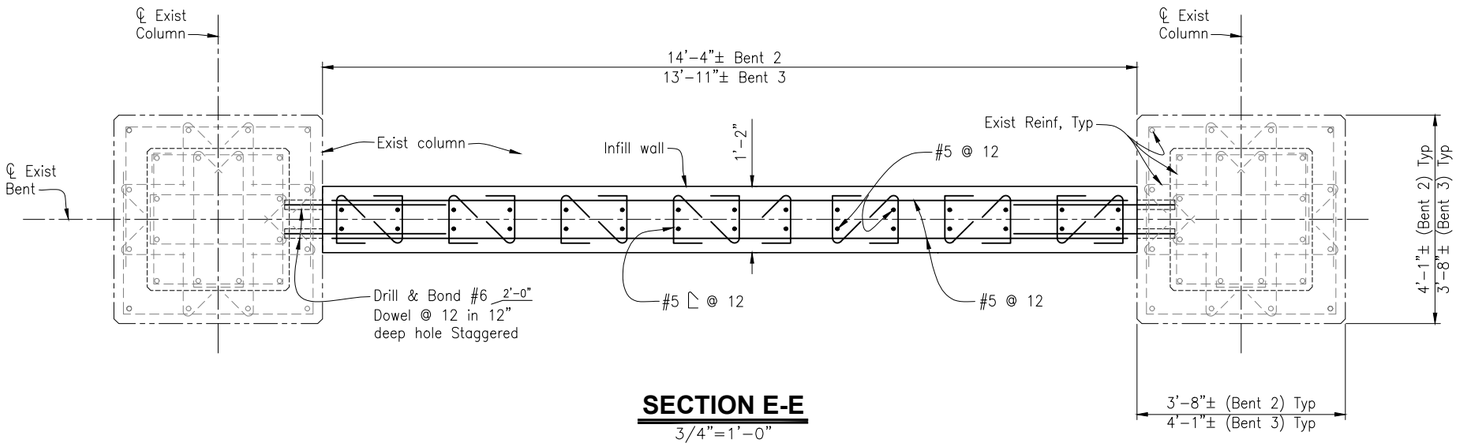

SECTION E-E

3/4"=1'-0"

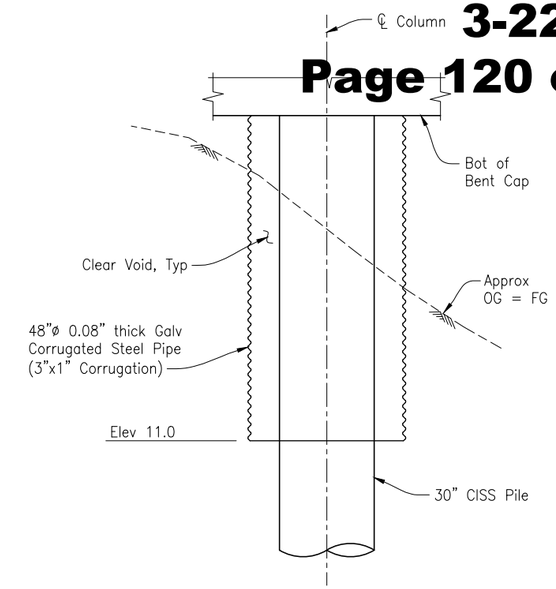

ISOLATION CASING DETAILS

1/2"=1'-0"

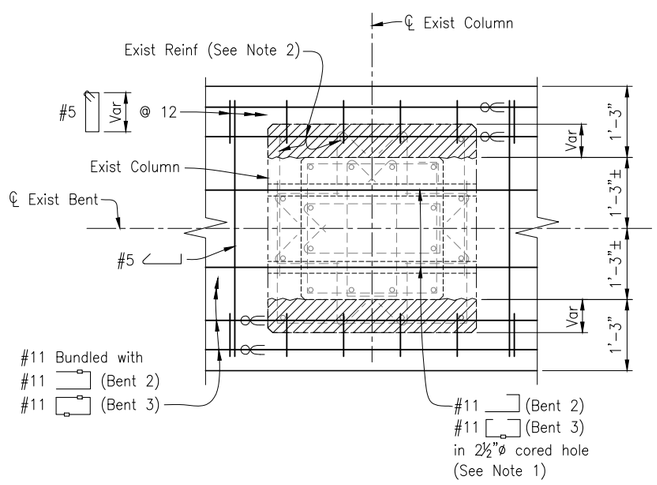

SECTION F-F

3/4"=1'-0"

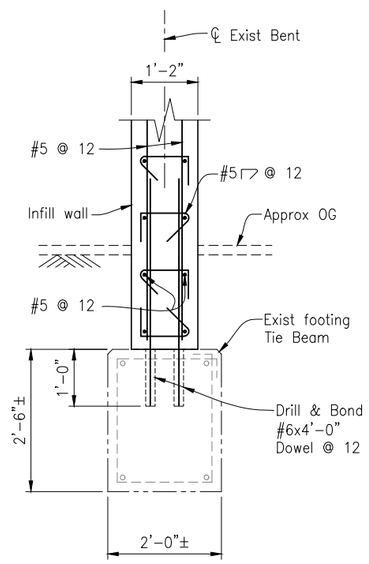

SECTION G-G

3/4"=1'-0"

NOTES:

1. Holes cored through existing column to miss existing reinforcement. Pressure grout bars in cored holes.
2. The Contractor shall protect existing reinforcement.

LEGEND:

- Indicates Existing Structure
- Indicates New Structure
- Indicates Bridge Removal (Portion)
- Indicates bundled bars

NOTE:
THE CONTRACTOR SHALL VERIFY ALL CONTROLLING FIELD DIMENSIONS BEFORE ORDERING OR FABRICATING ANY MATERIAL.

100% SUBMITTAL
NOT FOR CONSTRUCTION

B-10

REGISTERED PROFESSIONAL ENGINEER — CAMERON PINKERTON — No. C 061322 — CIVIL — STATE OF CALIFORNIA — EXPIRES 12-31-22

REGISTERED ENGINEER – CIVIL

TRC Engineers or its officers or agents shall not be responsible for the accuracy or completeness of electronic copies of this plan sheet

CITY OF SANTA CRUZ

PREPARED FOR THE
CITY OF SANTA CRUZ
PUBLIC WORKS DEPARTMENT

DESIGN	BY C. PINKERTON	CHECKED W. CULLUMBER	
DETAILS	BY A. CARDOZA	CHECKED W. CULLUMBER	
QUANTITIES	BY C. PINKERTON	CHECKED	
ORIGINAL SCALE IN INCHES FOR REDUCED PLANS	0 1 2 3		

TRC
MARK IMBRIANI
PROJECT MANAGER

BRIDGE NO. 36C0108
CONTRACT NO.
EA NO.

MURRAY STREET BRIDGE
SEISMIC RETROFIT AND BARRIER REPLACEMENT
BENTS 2 & 3 DETAILS NO. 2

DISREGARD PRINTS BEARING EARLIER REVISION DATES — REVISION DATES (PRELIMINARY STAGE ONLY): 03-22-11 05-28-13 09-13-13 07-01-15 03-18-20 07-23-21

SCALE AS SHOWN
SHEET 122 OF 167
VAULT NO. XXXXXXX

Drawing name: H:\1161 – Santa Cruz\Murray Street Bridge Seismic Retrofit\010-Bent 2-3-Det-2.dwg Layout Tab: Layout1 Aug 27,2021 – 2:31pm ACardoza

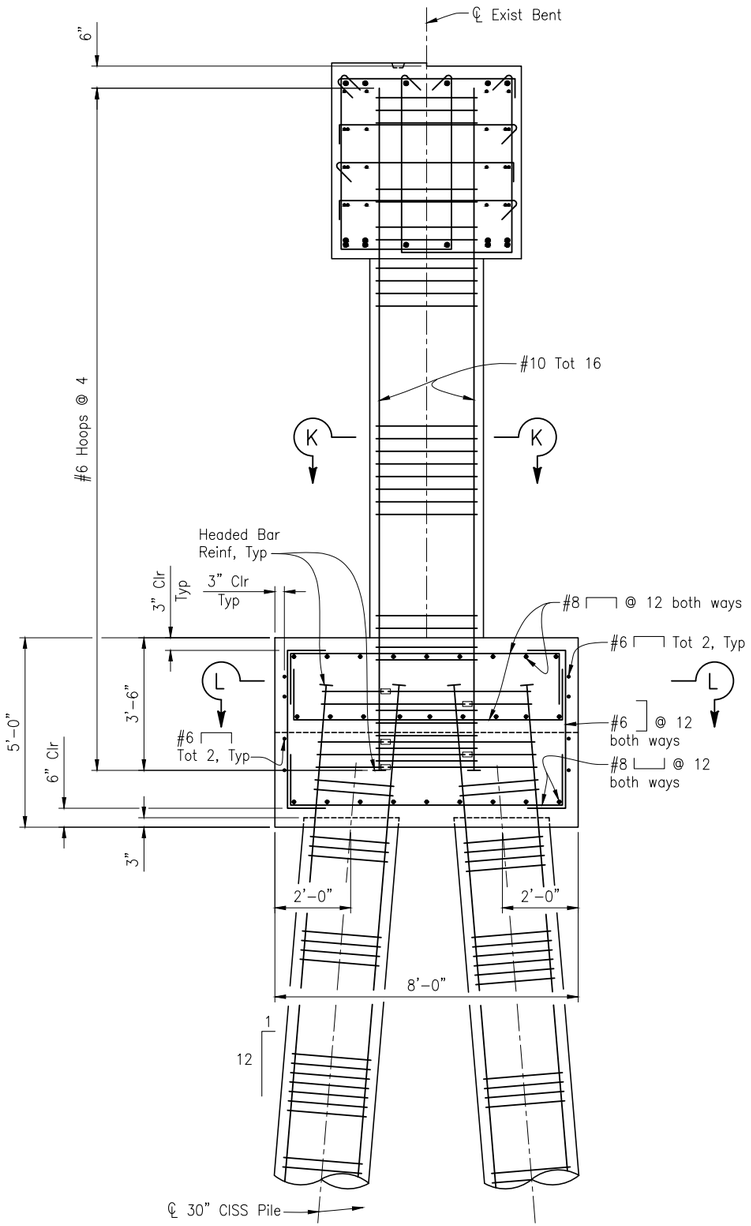

ELEVATION J-J

1/2"=1'-0"

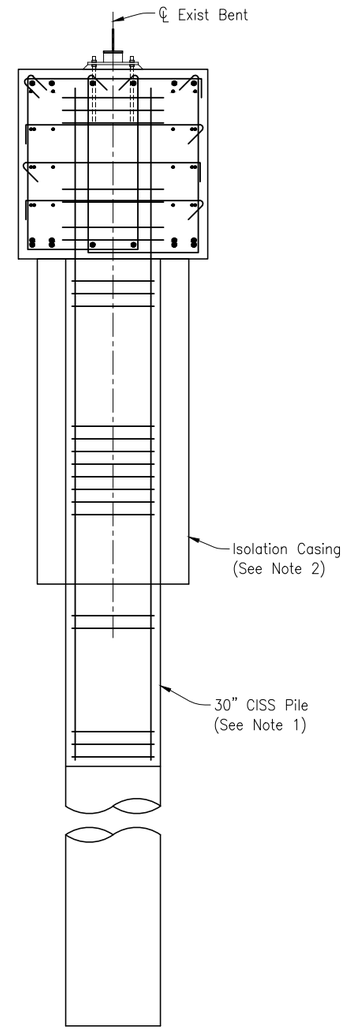

ELEVATION Z-Z

1/2"=1'-0"

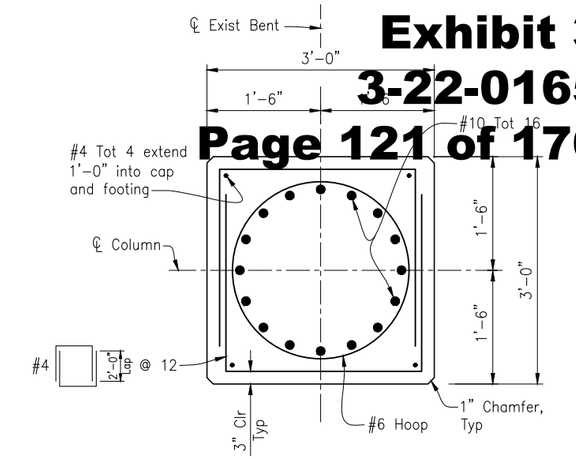

SECTION K-K

1"=1'-0"

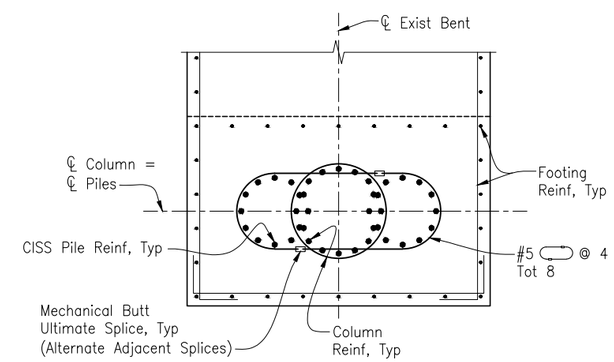

SECTION L-L

1/2"=1'-0"

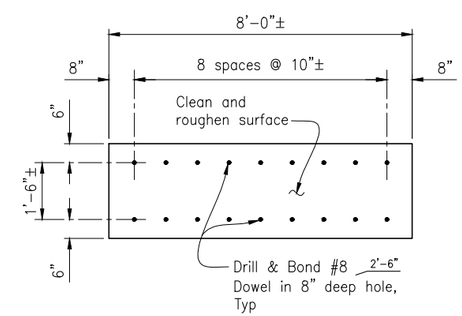

DOWEL LAYOUT

1/2"=1'-0"

NOTES:

1. For 30" CISS Pile details, see "PILE DETAILS" sheet.
2. For isolation casing details, see "BENTS 2 & 3 DETAILS NO. 2" sheet.

NOTE:
THE CONTRACTOR SHALL VERIFY ALL CONTROLLING FIELD DIMENSIONS BEFORE ORDERING OR FABRICATING ANY MATERIAL.

100% SUBMITTAL
NOT FOR CONSTRUCTION

B-11

REGISTERED PROFESSIONAL ENGINEER CAMERON PINKERTON No. 81-22 CIVIL STATE OF CALIFORNIA
DRAFT
REGISTERED ENGINEER – CIVIL
TRC Engineers or its officers or agents shall not be responsible for the accuracy or completeness of electronic copies of this plan sheet

CITY OF SANTA CRUZ

PREPARED FOR THE
CITY OF SANTA CRUZ
PUBLIC WORKS DEPARTMENT

DESIGN	BY C. PINKERTON	CHECKED W. CULLUMBER
DETAILS	BY A. CARDOZA	CHECKED W. CULLUMBER
QUANTITIES	BY C. PINKERTON	CHECKED
ORIGINAL SCALE IN INCHES FOR REDUCED PLANS	0 1 2 3	

TRC
MARK IMBRIANI
PROJECT MANAGER

BRIDGE NO. 36C0108
CONTRACT NO.
EA NO.

MURRAY STREET BRIDGE
SEISMIC RETROFIT AND BARRIER REPLACEMENT
BENTS 2 & 3 DETAILS NO. 3

DISREGARD PRINTS BEARING EARLIER REVISION DATES
REVISION DATES (PRELIMINARY STAGE ONLY): 05-28-13 09-13-13 07-01-15 03-16-20 07-23-21

SCALE AS SHOWN
SHEET 123 OF 167
VAULT NO. XXXXXXX

Drawing name: H:\1161 – Santa Cruz\Murray Street Bridge Seismic Retrofit\011-Bent 2-3-Det-3.dwg Layout Tab: Layout1 Aug 27,2021 – 2:32pm ACardoza

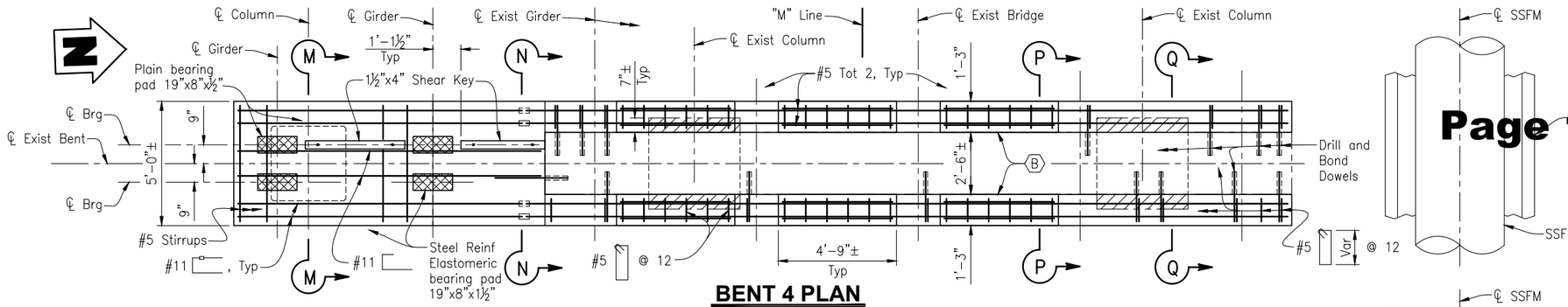

BENT 4 PLAN
3/8"=1'-0"

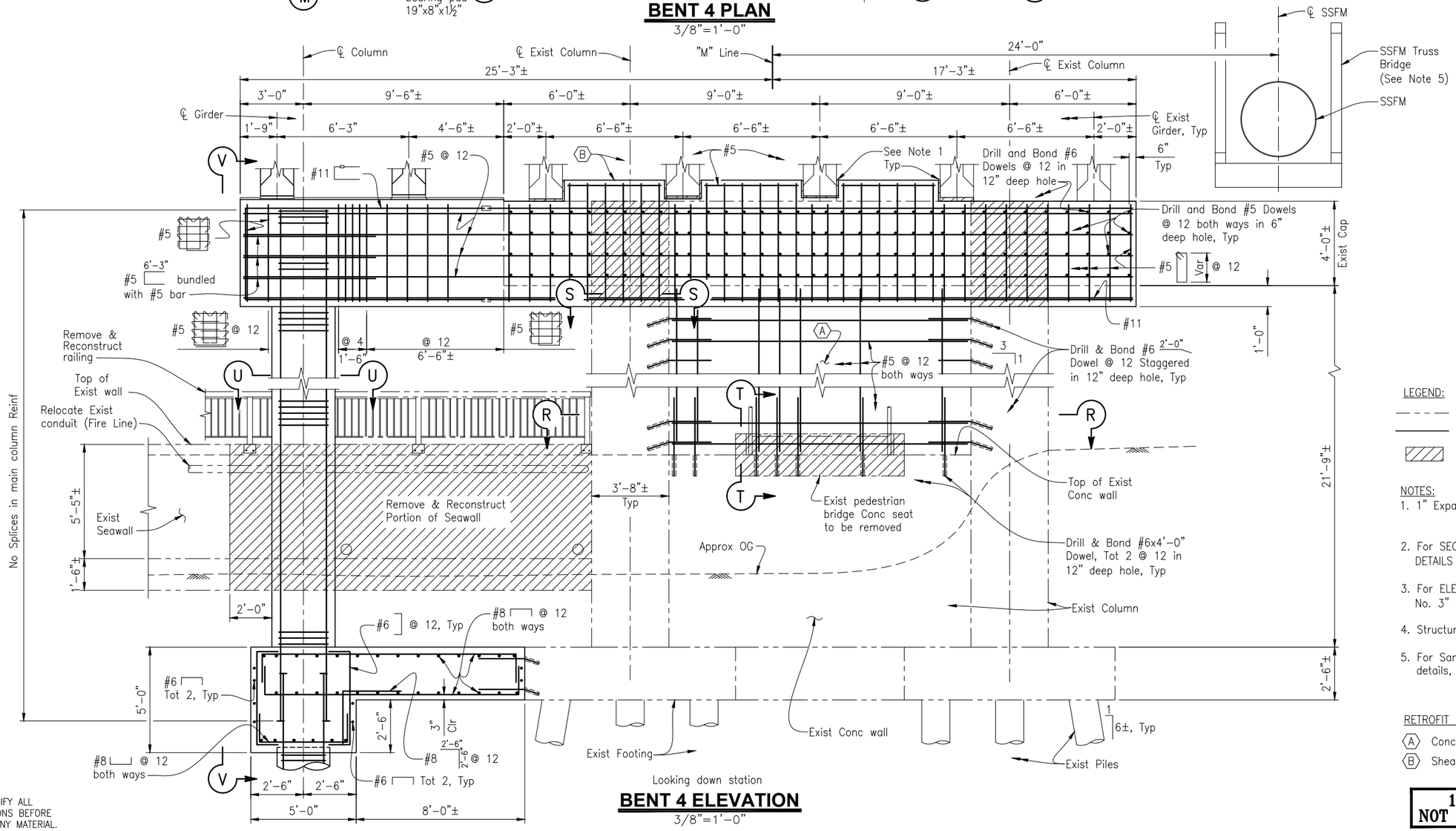

BENT 4 ELEVATION
3/8"=1'-0"

LEGEND:
- Indicates Existing Structure
- Indicates New Structure
- Indicates Bridge Removal (Portion)

NOTES:
1. 1" Expanded Polystyrene (B0-13 / 13-2)
2. For SECTION M-M thru U-U, see "BENT 4 DETAILS No. 2" sheet.
3. For ELEVATION V-V, see "BENT 4 DETAILS No. 3" SHEET.
4. Structure Excavation Type D at Bent 4.
5. For Sanitary Sewer Force Main (SSFM) details, see SANITARY SEWER PLANS.

RETROFIT LEGEND:
- (A) Concrete Infill Wall
- (B) Shear Key and Seat Extension

NOTE:
THE CONTRACTOR SHALL VERIFY ALL CONTROLLING FIELD DIMENSIONS BEFORE ORDERING OR FABRICATING ANY MATERIAL.

100% SUBMITTAL NOT FOR CONSTRUCTION

B-12

REGISTERED ENGINEER – CIVIL

TRC Engineers or its officers or agents shall not be responsible for the accuracy or completeness of electronic copies of this plan sheet

PREPARED FOR THE CITY OF SANTA CRUZ PUBLIC WORKS DEPARTMENT

DESIGN	BY C. PINKERTON	CHECKED W. CULLUMBER
DETAILS	BY A. CARDOZA	CHECKED W. CULLUMBER
QUANTITIES	BY C. PINKERTON	CHECKED

ORIGINAL SCALE IN INCHES FOR REDUCED PLANS 0 1 2 3

TRC
MARK IMBRIANI
PROJECT MANAGER

BRIDGE NO. 36C0108
CONTRACT NO.
EA NO.

MURRAY STREET BRIDGE SEISMIC RETROFIT AND BARRIER REPLACEMENT
BENT 4 LAYOUT

DISREGARD PRINTS BEARING EARLIER REVISION DATES
REVISION DATES (PRELIMINARY STAGE ONLY) 03-22-11 09-13-13 07-01-15 07-23-21

SCALE AS SHOWN
SHEET 124 OF 167
VAULT NO. XXXXXXX

Drawing name: H:\1161 – Santa Cruz\Murray Street Bridge Seismic Retrofit\012-Bent 4 Layout.dwg Layout Tab: Layout1 Aug 27,2021 – 2:32pm ACardoza

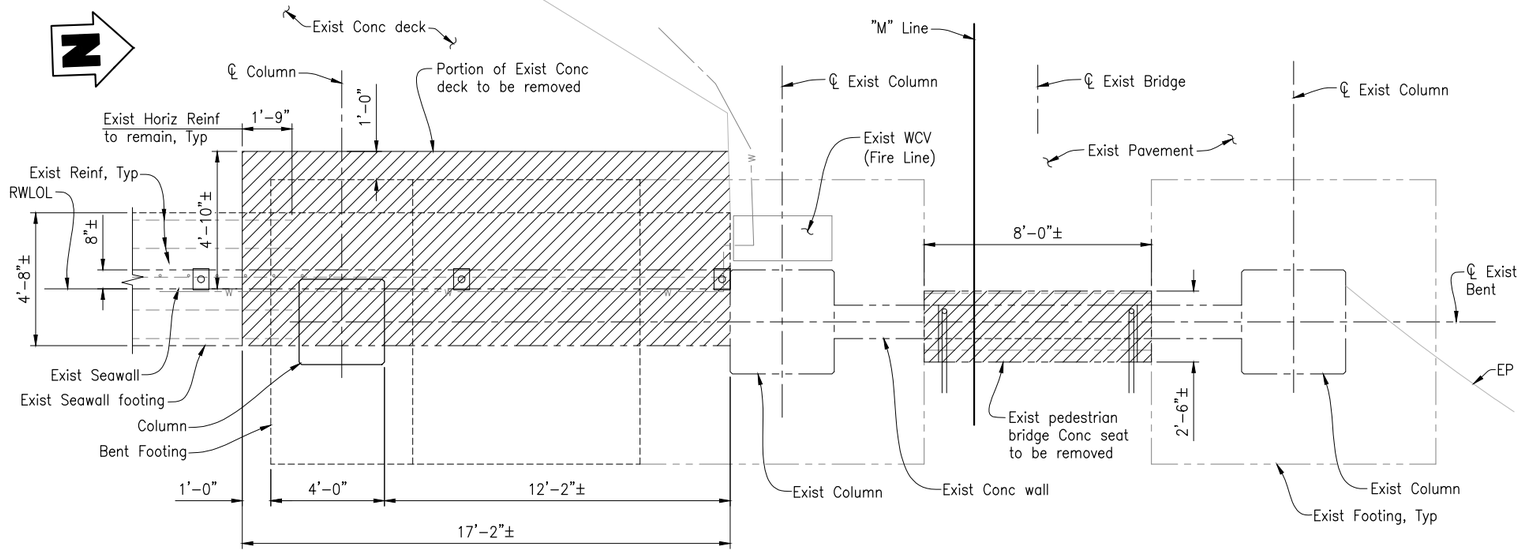

Bent Cap not shown

PART PLAN
3/8"=1'-0"

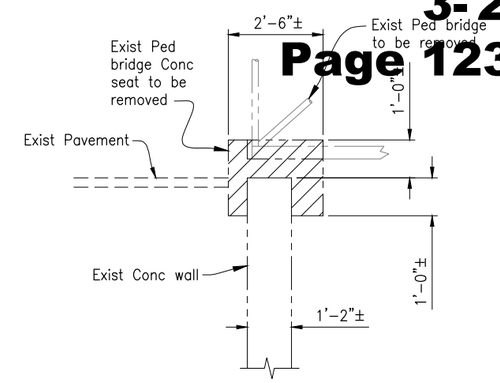

SECTION X-X
1/2"=1'-0"

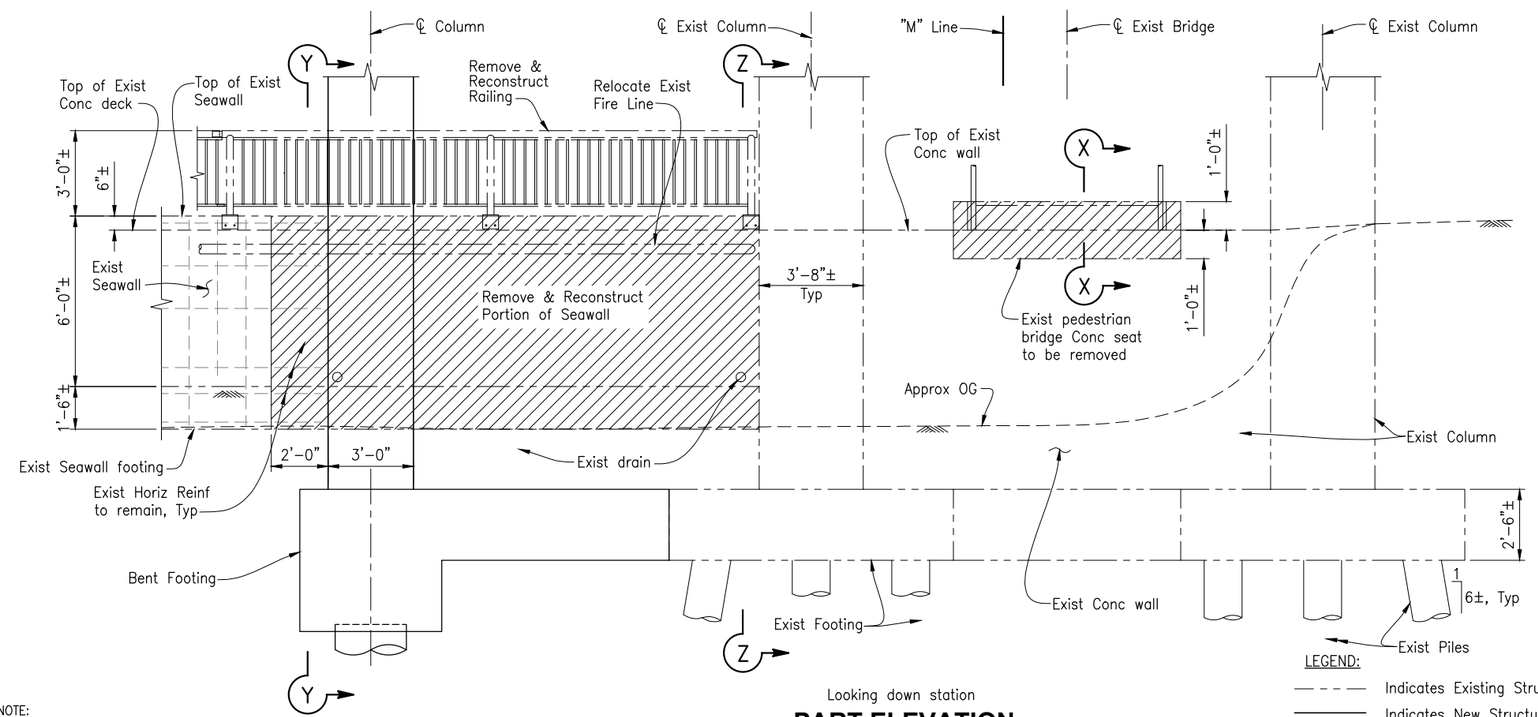

Looking down station

PART ELEVATION
3/8"=1'-0"

LEGEND:
- Indicates Existing Structure
- Indicates New Structure
- Indicates Bridge Removal (Portion)

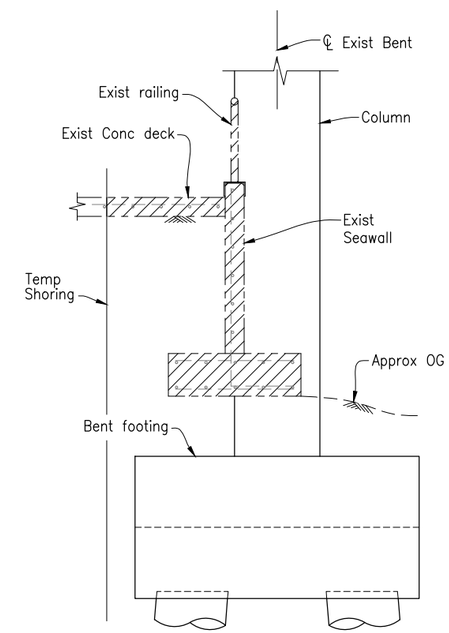

SECTION Y-Y
3/8"=1'-0"

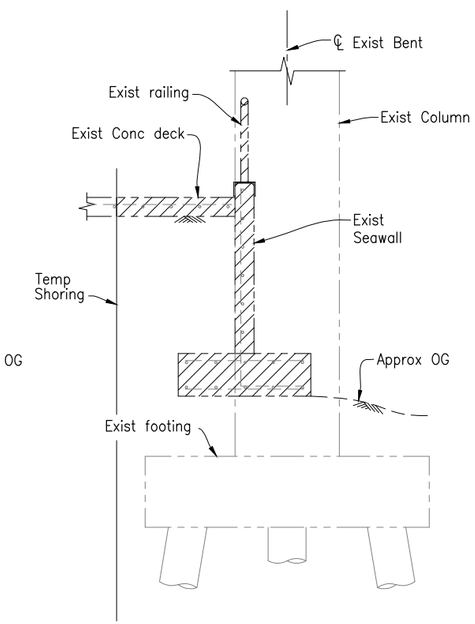

SECTION Z-Z
3/8"=1'-0"

NOTE:
THE CONTRACTOR SHALL VERIFY ALL CONTROLLING FIELD DIMENSIONS BEFORE ORDERING OR FABRICATING ANY MATERIAL.

100% SUBMITTAL
NOT FOR CONSTRUCTION

B-13

REGISTERED PROFESSIONAL ENGINEER — CAMERON PINKERTON — No. C 53131 — CIVIL — STATE OF CALIFORNIA — DRAFT

REGISTERED ENGINEER – CIVIL

TRC Engineers or its officers or agents shall not be responsible for the accuracy or completeness of electronic copies of this plan sheet

CITY OF SANTA CRUZ

PREPARED FOR THE
CITY OF SANTA CRUZ
PUBLIC WORKS DEPARTMENT

DESIGN	BY C. PINKERTON	CHECKED
DETAILS	BY G. IMBSEN	CHECKED
QUANTITIES	BY C. PINKERTON	CHECKED

ORIGINAL SCALE IN INCHES FOR REDUCED PLANS 0 1 2 3

TRC
MARK IMBRIANI
PROJECT MANAGER

BRIDGE NO. 36C0108
CONTRACT NO.
EA NO.

MURRAY STREET BRIDGE
SEISMIC RETROFIT AND BARRIER REPLACEMENT
BENT 4 DETAILS NO. 1

DISREGARD PRINTS BEARING EARLIER REVISION DATES
REVISION DATES (PRELIMINARY STAGE ONLY): 03-22-11 09-13-13 07-01-15 04-01-20 07-23-21 08-15-21

SCALE AS SHOWN
SHEET 125 OF 167
VAULT NO. XXXXXXX

Drawing name: H:\1161 – Santa Cruz\Murray Street Bridge Seismic Retrofit\013-Bent 4 Det-1.dwg Layout Tab: Layout1 (2) Oct 08,2021 – 8:49am gimbsen

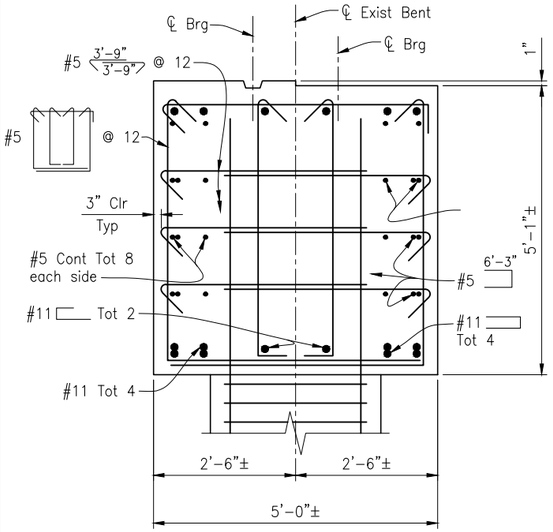

SECTION M-M
3/4"=1'-0"

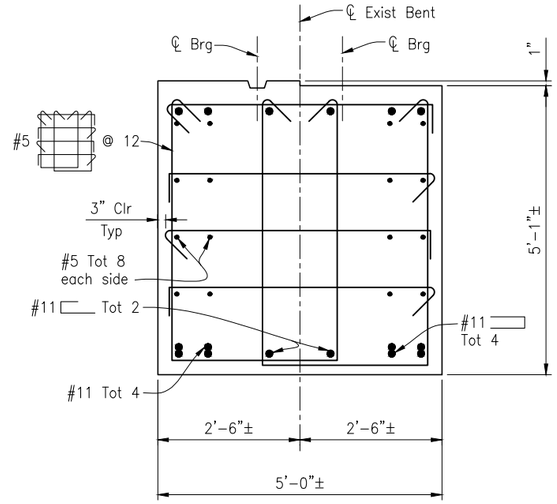

SECTION N-N
3/4"=1'-0"

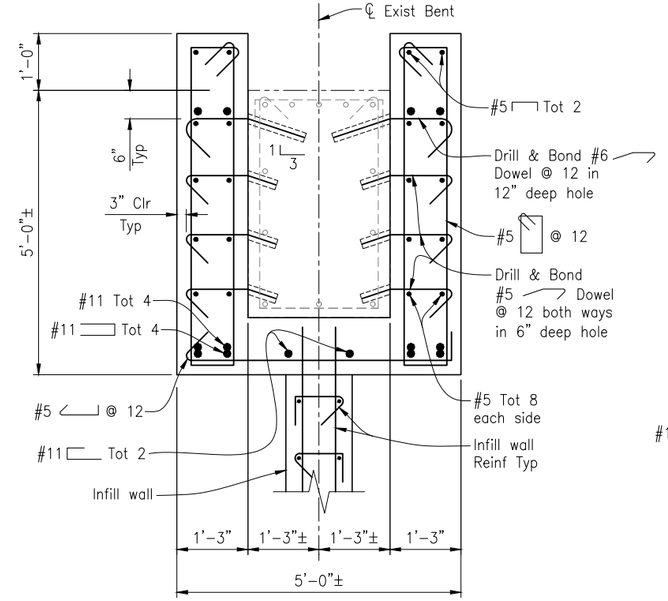

SECTION P-P
3/4"=1'-0"

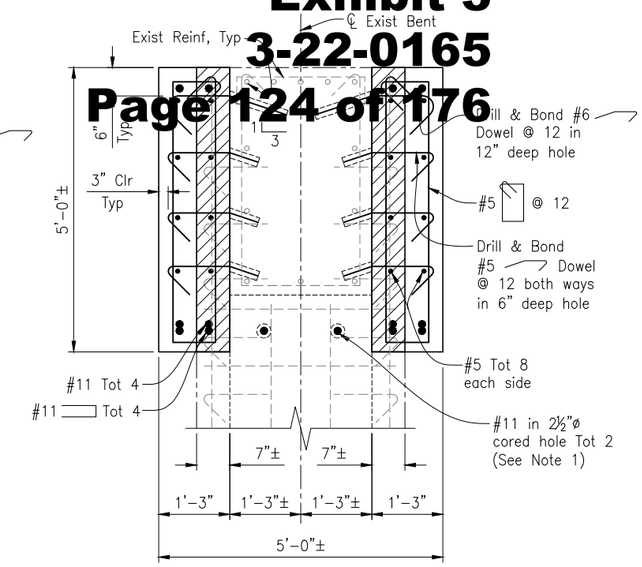

SECTION Q-Q
3/4"=1'-0"

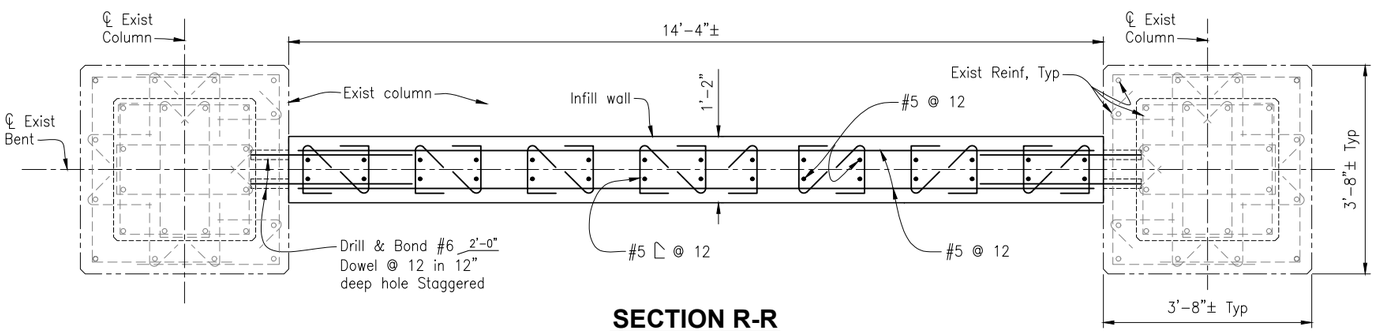

SECTION R-R
3/4"=1'-0"

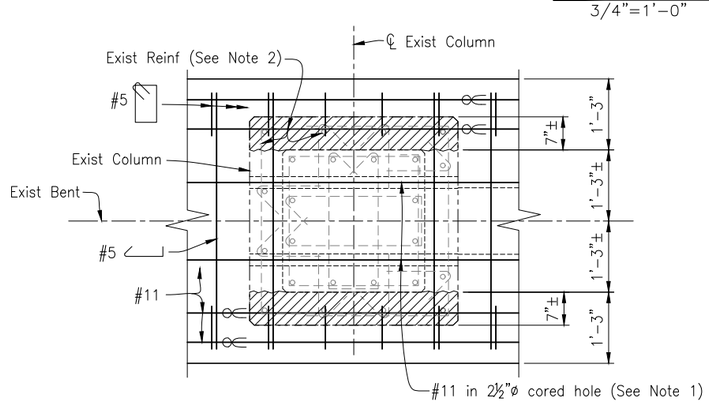

SECTION S-S
3/4"=1'-0"

NOTES:

1. Holes cored through existing column to miss existing reinforcement. Pressure grout bars in cored holes.
2. The Contractor shall protect existing reinforcement.

LEGEND:

- Indicates Existing Structure
- Indicates New Structure
- Indicates Bridge Removal (Portion)
- Indicates bundled bars

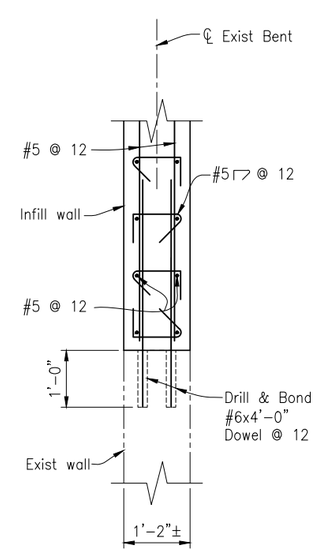

SECTION T-T
3/4"=1'-0"

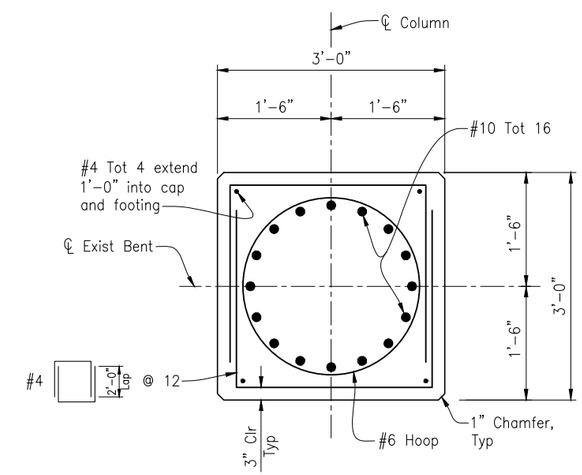

SECTION U-U
1"=1'-0"

NOTE:
THE CONTRACTOR SHALL VERIFY ALL CONTROLLING FIELD DIMENSIONS BEFORE ORDERING OR FABRICATING ANY MATERIAL.

100% SUBMITTAL
NOT FOR CONSTRUCTION

B-14

REGISTERED PROFESSIONAL ENGINEER CAMERON PINKERTON No. 78038 Exp. 03-31-22 CIVIL STATE OF CALIFORNIA
REGISTERED ENGINEER – CIVIL
TRC Engineers or its officers or agents shall not be responsible for the accuracy or completeness of electronic copies of this plan sheet

CITY OF SANTA CRUZ

PREPARED FOR THE
CITY OF SANTA CRUZ
PUBLIC WORKS DEPARTMENT

	BY	CHECKED
DESIGN	C. PINKERTON	W. CULLUMBER
DETAILS	A. CARDOZA	W. CULLUMBER
QUANTITIES	C. PINKERTON	

ORIGINAL SCALE IN INCHES FOR REDUCED PLANS 0 1 2 3

TRC
MARK IMBRIANI
PROJECT MANAGER

BRIDGE NO. 36C0108
CONTRACT NO.
EA NO.

MURRAY STREET BRIDGE
SEISMIC RETROFIT AND BARRIER REPLACEMENT
BENT 4 DETAILS NO. 2

DISREGARD PRINTS BEARING EARLIER REVISION DATES
REVISION DATES (PRELIMINARY STAGE ONLY) 03-22-11 05-28-13 09-13-13 07-01-15

SCALE AS SHOWN
SHEET 126 OF 167
VAULT NO. XXXXXXX

Drawing name: H:\1161 – Santa Cruz\Murray Street Bridge Seismic Retrofit\014-Bent 4-Det-2.dwg Layout Tab: Layout1 Aug 27,2021 – 2:34pm ACardoza

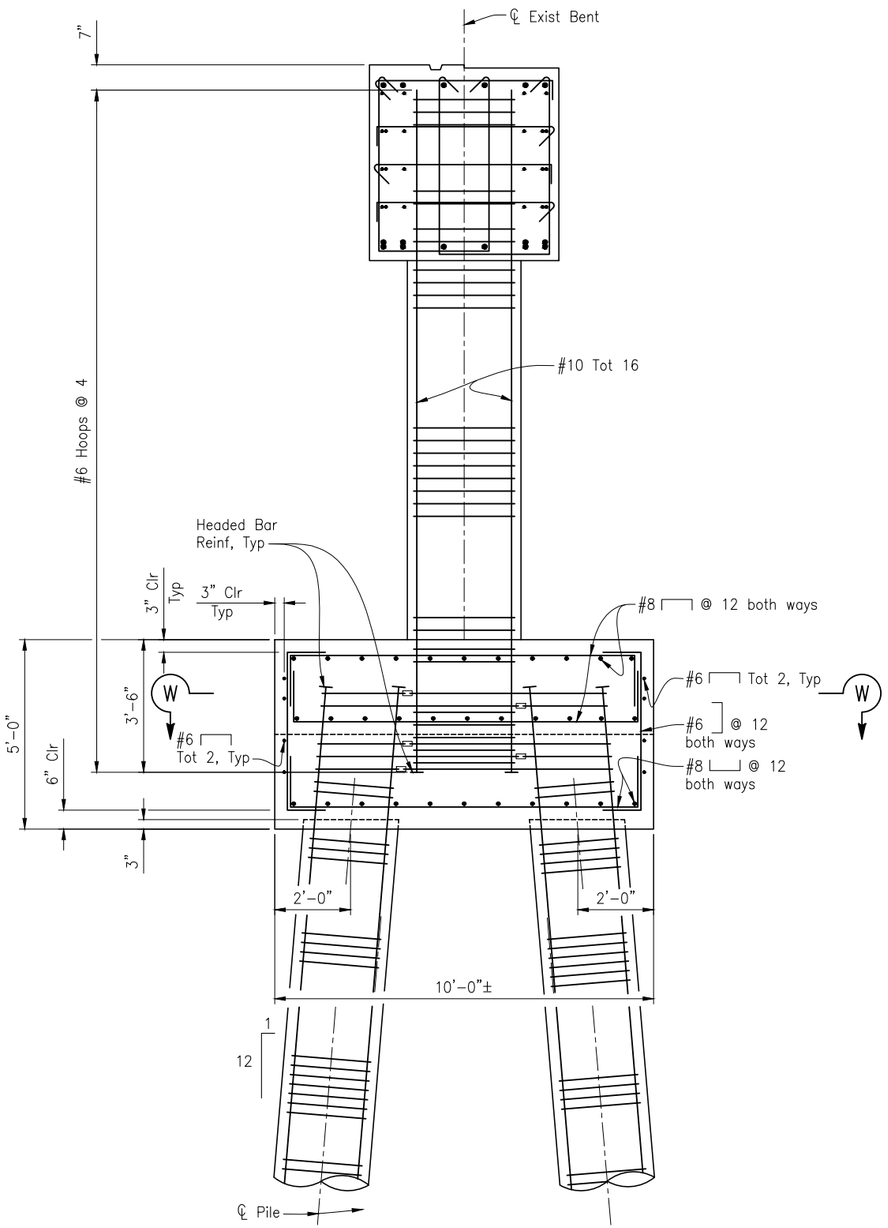

ELEVATION V-V

1/2"=1'-0"

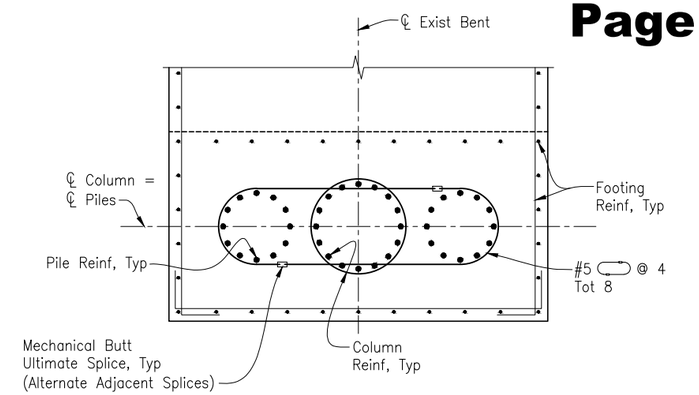

SECTION W-W

1/2"=1'-0"

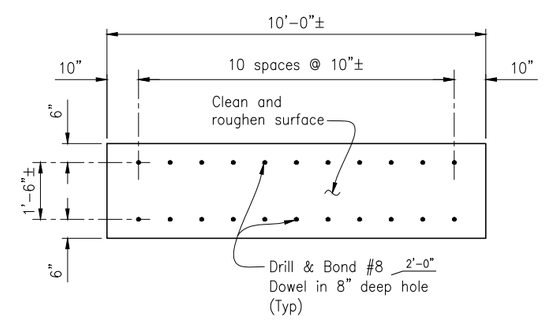

DOWEL LAYOUT

1/2"=1'-0"

NOTE:
THE CONTRACTOR SHALL VERIFY ALL CONTROLLING FIELD DIMENSIONS BEFORE ORDERING OR FABRICATING ANY MATERIAL.

100% SUBMITTAL
NOT FOR CONSTRUCTION

B-15

REGISTERED PROFESSIONAL ENGINEER CAMERON PINKERTON No. 6[illegible]51-22 CIVIL STATE OF CALIFORNIA

REGISTERED ENGINEER – CIVIL

TRC Engineers or its officers or agents shall not be responsible for the accuracy or completeness of electronic copies of this plan sheet

CITY OF SANTA CRUZ

PREPARED FOR THE
CITY OF SANTA CRUZ
PUBLIC WORKS DEPARTMENT

DESIGN	BY C. PINKERTON	CHECKED W. CULLUMBER
DETAILS	BY A. CARDOZA	CHECKED W. CULLUMBER
QUANTITIES	BY C. PINKERTON	CHECKED
ORIGINAL SCALE IN INCHES FOR REDUCED PLANS	0 1 2 3	

TRC
MARK IMBRIANI
PROJECT MANAGER

BRIDGE NO. 36C0108
CONTRACT NO.
EA NO.

MURRAY STREET BRIDGE
SEISMIC RETROFIT AND BARRIER REPLACEMENT
BENT 4 DETAILS NO. 3

DISREGARD PRINTS BEARING EARLIER REVISION DATES
REVISION DATES (PRELIMINARY STAGE ONLY) 05-28-13 09-13-13 07-01-15

SCALE AS SHOWN
SHEET 127 OF 167
VAULT NO. XXXXXXX

Drawing name: H:\1161 – Santa Cruz\Murray Street Bridge Seismic Retrofit\015-Bent 4-Det-3.dwg Layout Tab: Layout1 Aug 27,2021 – 2:35pm ACardoza

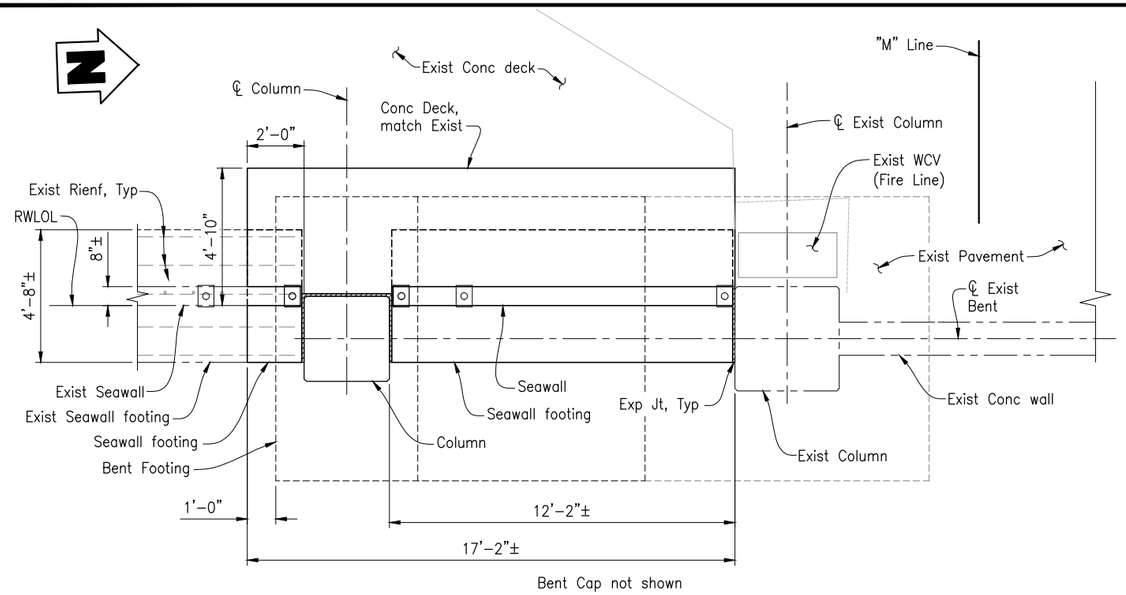

PART PLAN

3/8"=1'-0"

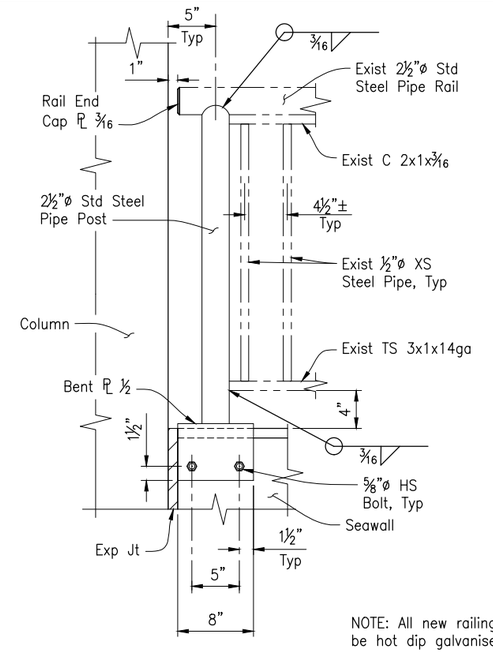

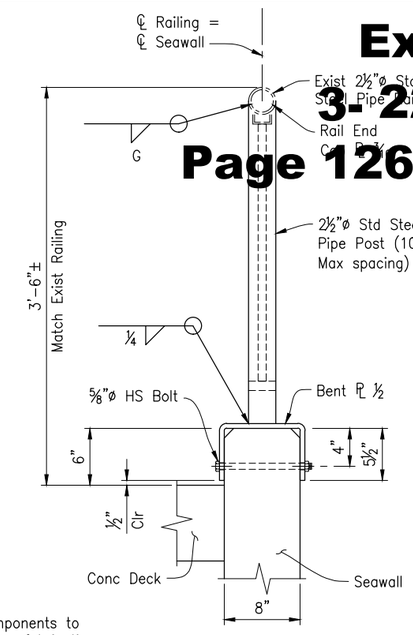

NOTE: All new railing components to be hot dip galvanised after fabrication.

RAILING DETAILS

1 1/2" = 1'-0"

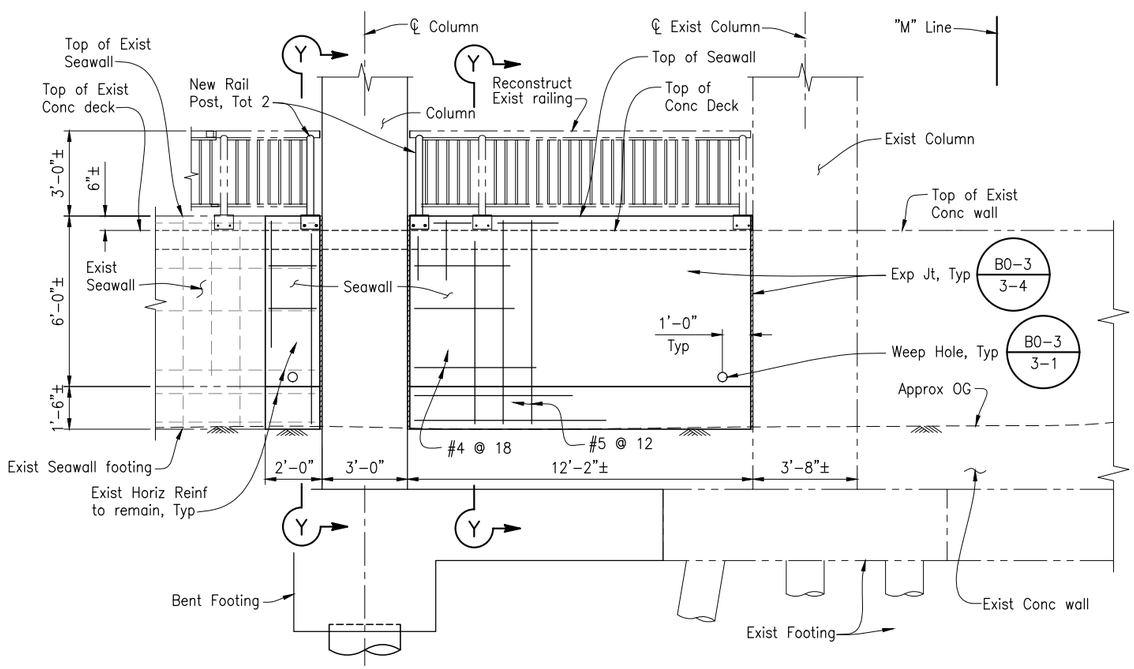

Looking down station

PART ELEVATION

3/8"=1'-0"

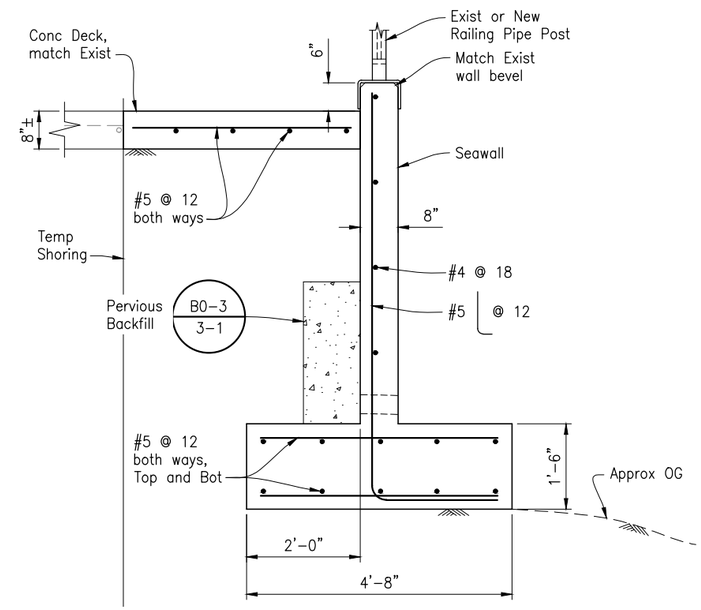

SECTION Y-Y

3/4"=1'-0"

NOTE:
THE CONTRACTOR SHALL VERIFY ALL CONTROLLING FIELD DIMENSIONS BEFORE ORDERING OR FABRICATING ANY MATERIAL.

LEGEND:

- — — — Indicates Existing Structure
- ——— Indicates New Structure

100% SUBMITTAL NOT FOR CONSTRUCTION

B-16

REGISTERED PROFESSIONAL ENGINEER CAMERON PINKERTON No. C 51-22 CIVIL STATE OF CALIFORNIA — DRAFT

REGISTERED ENGINEER – CIVIL

TRC Engineers or its officers or agents shall not be responsible for the accuracy or completeness of electronic copies of this plan sheet

CITY OF SANTA CRUZ

PREPARED FOR THE CITY OF SANTA CRUZ PUBLIC WORKS DEPARTMENT

DESIGN	BY C. PINKERTON	CHECKED
DETAILS	BY G. IMBSEN	CHECKED
QUANTITIES	BY C. PINKERTON	CHECKED

ORIGINAL SCALE IN INCHES FOR REDUCED PLANS 0 1 2 3

TRC
MARK IMBRIANI
PROJECT MANAGER

BRIDGE NO. 36C0108
CONTRACT NO.
EA NO.

MURRAY STREET BRIDGE
SEISMIC RETROFIT AND BARRIER REPLACEMENT
BENT 4 DETAILS NO. 4

DISREGARD PRINTS BEARING EARLIER REVISION DATES
REVISION DATES (PRELIMINARY STAGE ONLY): 03-22-11 09-13-13 07-01-19 04-01-20 07-23-21 08-15-21

SCALE AS SHOWN
SHEET 128 OF 167
VAULT NO. XXXXXXX

Drawing name: H:\1161 – Santa Cruz\Murray Street Bridge Seismic Retrofit\016-Bent 4 Det-4.dwg Layout Tab: Layout1 (2) Oct 08,2021 – 8:47am gimbsen

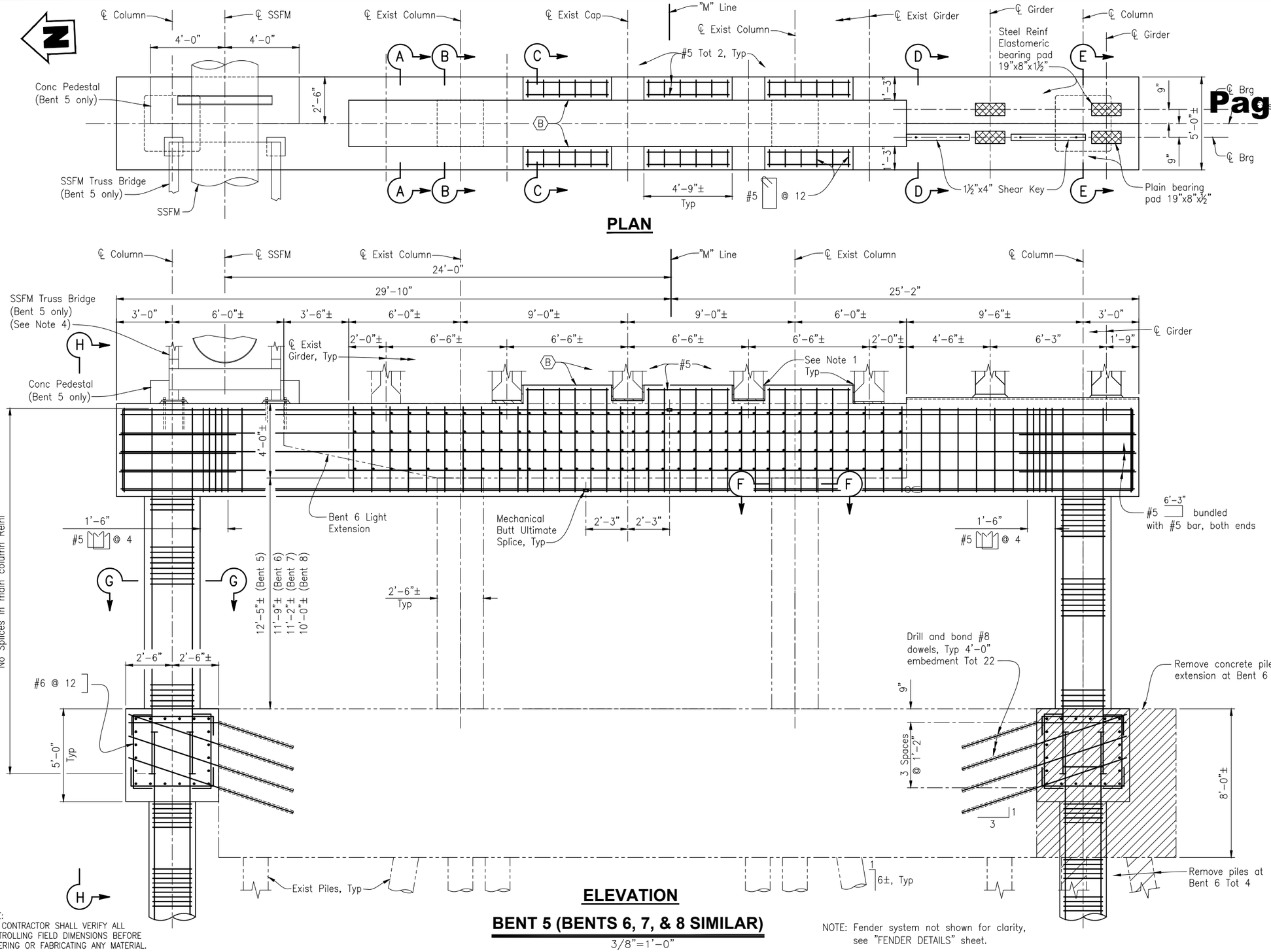

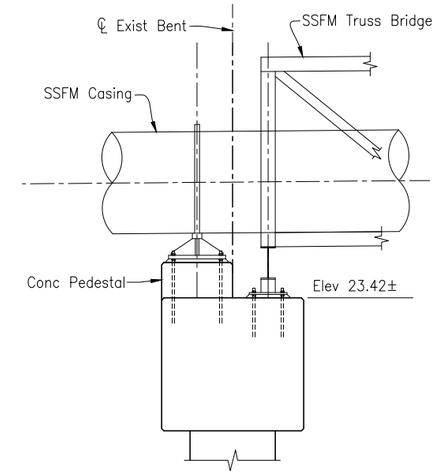

RETROFIT LEGEND:

- (A) Concrete Infill Wall
- (B) Shear Key and Seat Extension

LEGEND:

- Indicates Existing Structure
- Indicates New Structure
- Indicates Bridge Removal (Portion)
- Indicates bundled bars

NOTES:

1. 1" Expanded Polystyrene (B0-13 / 13-2)
2. For SECTION A-A thru G-G, see "BENTS 5 THRU 8 DETAILS No. 1" sheet.
3. For ELEVATION H-H, see "BENTS 5 THRU 8 DETAILS No. 2" sheet.
4. For Sanitary Sewer Force Main (SSFM) details, see SANITARY SEWER PLANS.

NOTE:
THE CONTRACTOR SHALL VERIFY ALL CONTROLLING FIELD DIMENSIONS BEFORE ORDERING OR FABRICATING ANY MATERIAL.

NOTE: Fender system not shown for clarity, see "FENDER DETAILS" sheet.

100% SUBMITTAL
NOT FOR CONSTRUCTION

B-17

REGISTERED PROFESSIONAL ENGINEER CAMERON PINKERTON No. 73588 CIVIL STATE OF CALIFORNIA
REGISTERED ENGINEER – CIVIL
TRC Engineers or its officers or agents shall not be responsible for the accuracy or completeness of electronic copies of this plan sheet

CITY OF SANTA CRUZ
PREPARED FOR THE CITY OF SANTA CRUZ PUBLIC WORKS DEPARTMENT

DESIGN	BY C. PINKERTON	CHECKED W. CULLUMBER
DETAILS	BY A. CARDOZA	CHECKED W. CULLUMBER
QUANTITIES	BY C. PINKERTON	CHECKED

ORIGINAL SCALE IN INCHES FOR REDUCED PLANS 0 1 2 3

TRC
MARK IMBRIANI
PROJECT MANAGER

BRIDGE NO. 36C0108
CONTRACT NO.
EA NO.

MURRAY STREET BRIDGE
SEISMIC RETROFIT AND BARRIER REPLACEMENT
BENTS 5 THRU 8 LAYOUT

DISREGARD PRINTS BEARING EARLIER REVISION DATES
REVISION DATES (PRELIMINARY STAGE ONLY) 03-22-11 05-28-13 09-13-13 07-01-15 07-23-21

SCALE AS SHOWN
SHEET 129 OF 167
VAULT NO. XXXXXXX

Drawing name: H:\1161 – Santa Cruz\Murray Street Bridge Seismic Retrofit\017-Bent 5-8 Layout.dwg Layout Tab: Layout1 Aug 27,2021 – 2:36pm ACardoza

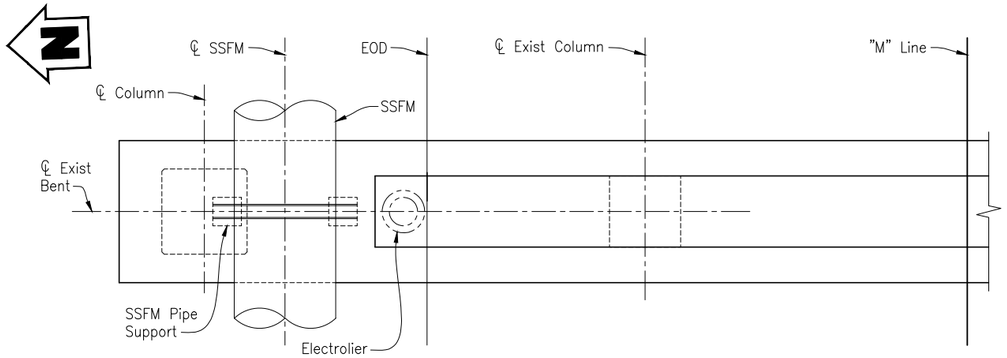

PART ELEVATION

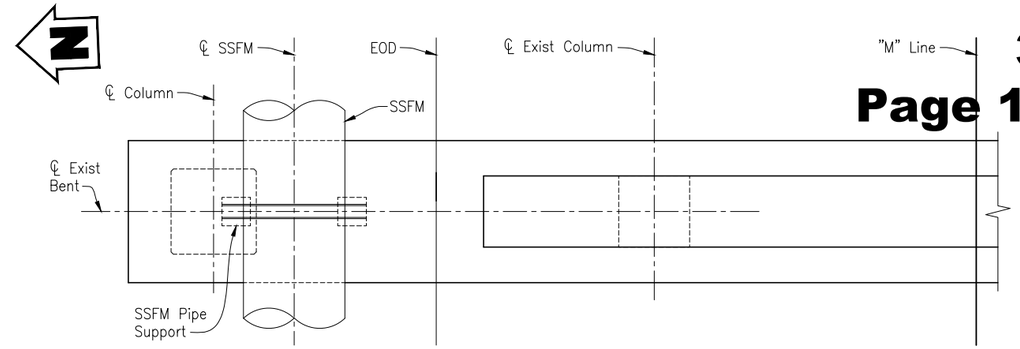

PART ELEVATION

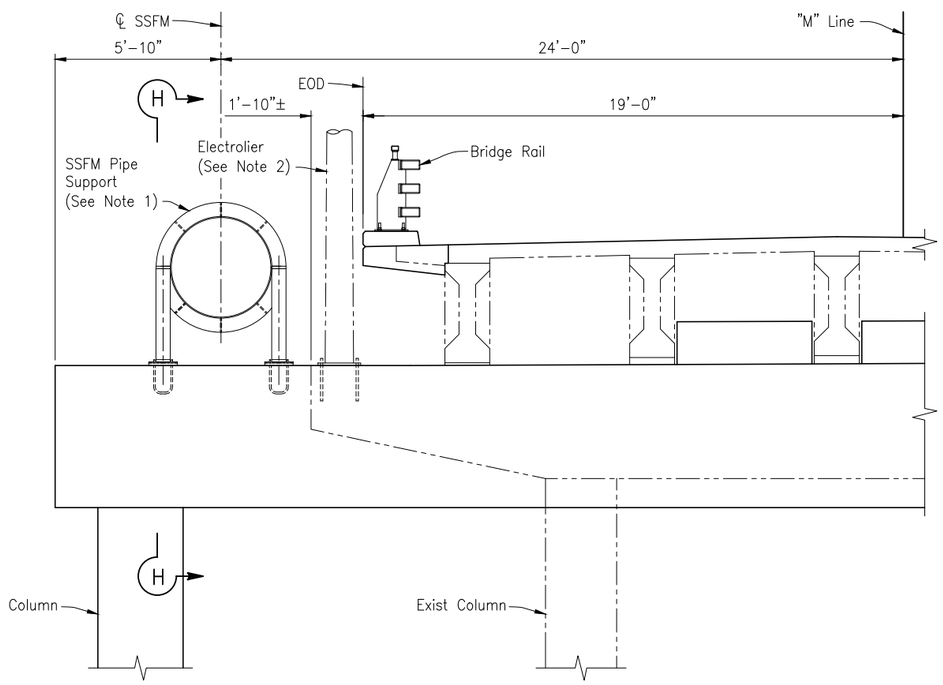

PART ELEVATION

BENT 6
3/8"=1'-0"

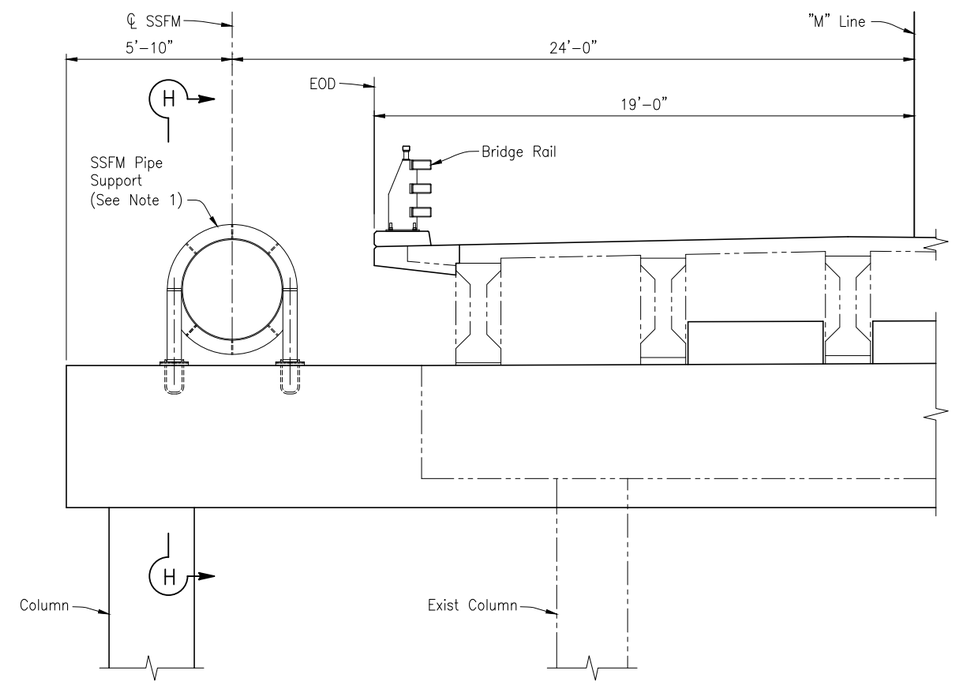

PART ELEVATION

BENTS 7 & 8
3/8"=1'-0"

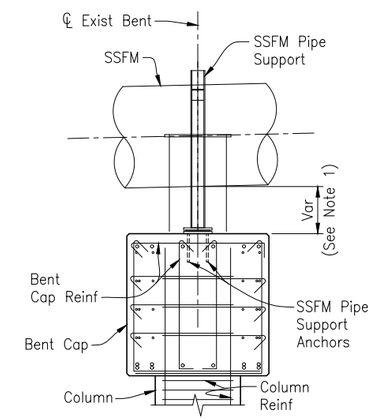

SECTION H-H
3/8"=1'-0"

LEGEND:

- - - - Indicates Existing Structure
——— Indicates New Structure

NOTE:

1. For Sanitary Sewer Force Main (SSFM) details, see SANITARY SEWER PLANS.
2. Reset Structure Mounted Electrolier.

NOTE:
THE CONTRACTOR SHALL VERIFY ALL CONTROLLING FIELD DIMENSIONS BEFORE ORDERING OR FABRICATING ANY MATERIAL.

100% SUBMITTAL
NOT FOR CONSTRUCTION

B-18

REGISTERED PROFESSIONAL ENGINEER CAMERON PINKERTON No. 36C0108 Exp. 6-31-22 CIVIL STATE OF CALIFORNIA

REGISTERED ENGINEER – CIVIL

TRC Engineers or its officers or agents shall not be responsible for the accuracy or completeness of electronic copies of this plan sheet

CITY OF SANTA CRUZ

PREPARED FOR THE
CITY OF SANTA CRUZ
PUBLIC WORKS DEPARTMENT

DESIGN	BY C. PINKERTON	CHECKED W. CULLUMBER
DETAILS	BY A. CARDOZA	CHECKED W. CULLUMBER
QUANTITIES	BY C. PINKERTON	CHECKED

ORIGINAL SCALE IN INCHES FOR REDUCED PLANS 0 1 2 3

TRC
MARK IMBRIANI
PROJECT MANAGER

BRIDGE NO. 36C0108
CONTRACT NO.
EA NO.

MURRAY STREET BRIDGE
SEISMIC RETROFIT AND BARRIER REPLACEMENT
BENTS 5 THRU 8 DETAILS NO. 1

DISREGARD PRINTS BEARING EARLIER REVISION DATES
REVISION DATES (PRELIMINARY STAGE ONLY) 04-16-20 04-28-20 07-23-21

SCALE AS SHOWN
SHEET 130 OF 167
VAULT NO. XXXXXXX

Drawing name: H:\1161 – Santa Cruz\Murray Street Bridge Seismic Retrofit\018-Bent 5-8 Det 1.dwg Layout Tab: SSFM BENT 6 (2) Aug 27,2021 – 2:37pm ACardoza

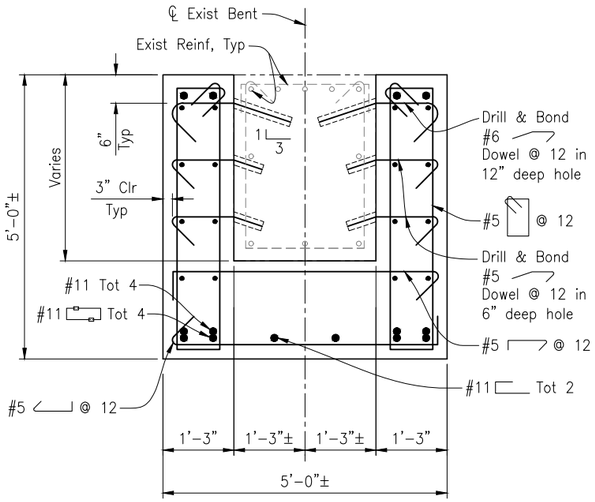

Only at Bent 6

SECTION A-A
3/4"=1'-0"

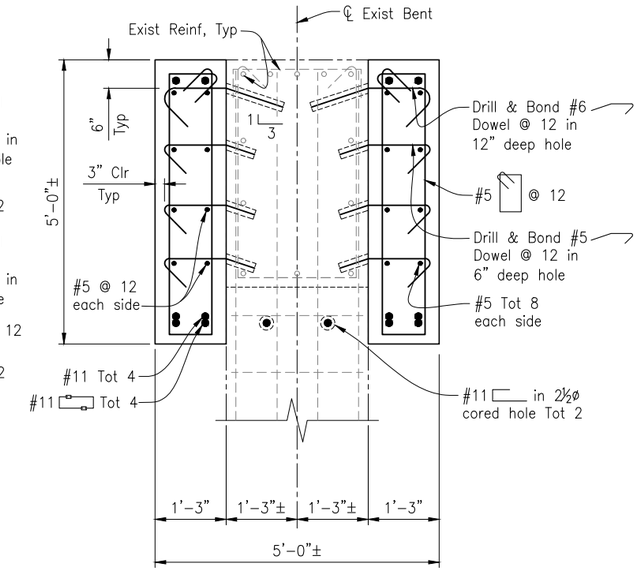

SECTION B-B
3/4"=1'-0"

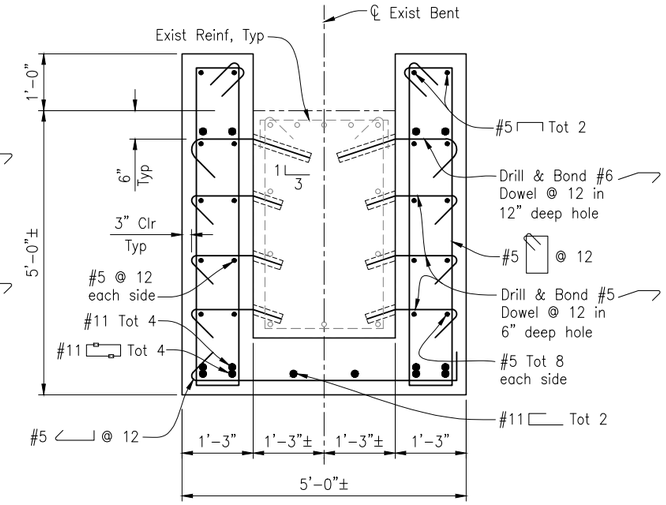

SECTION C-C
3/4"=1'-0"

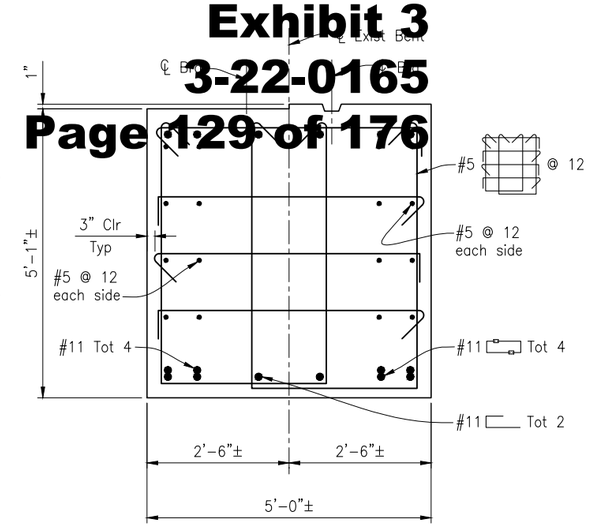

SECTION D-D
3/4"=1'-0"

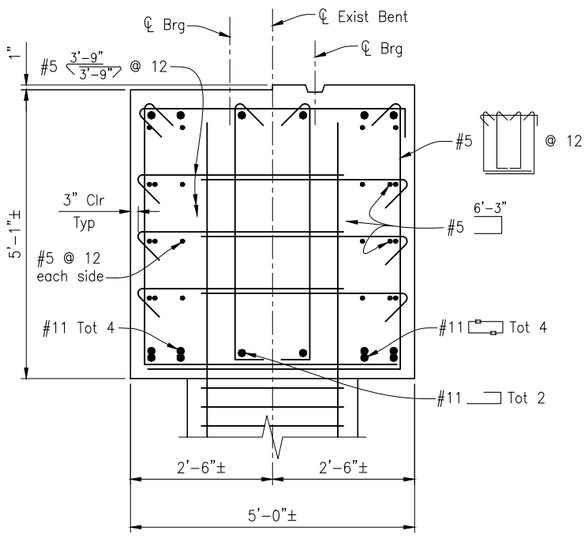

SECTION E-E
3/4"=1'-0"

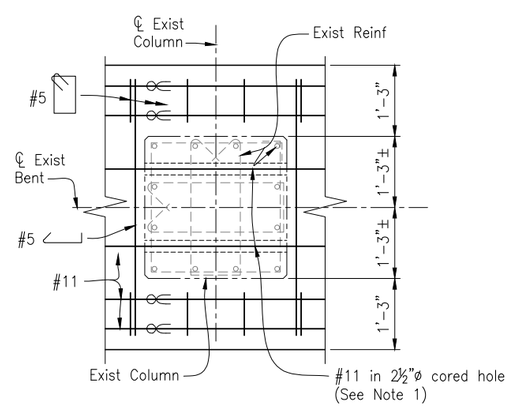

SECTION F-F
3/4"=1'-0"

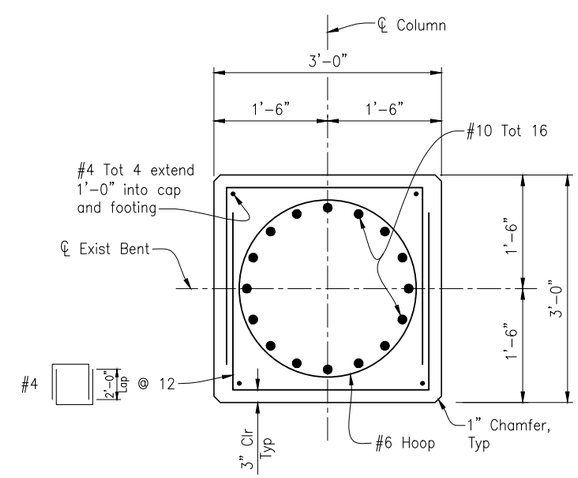

SECTION G-G
1"=1'-0"

NOTE:
1. Holes cored through existing column to miss existing reinforcement. Pressure grout bars in cored holes.

LEGEND:
- Indicates Existing Structure
- Indicates New Structure
- Indicates bundled bars

NOTE:
THE CONTRACTOR SHALL VERIFY ALL CONTROLLING FIELD DIMENSIONS BEFORE ORDERING OR FABRICATING ANY MATERIAL.

100% SUBMITTAL NOT FOR CONSTRUCTION

B-19

REGISTERED PROFESSIONAL ENGINEER CAMERON PINKERTON No. 31-22 CIVIL STATE OF CALIFORNIA — DRAFT

REGISTERED ENGINEER – CIVIL

TRC Engineers or its officers or agents shall not be responsible for the accuracy or completeness of electronic copies of this plan sheet

CITY OF SANTA CRUZ

PREPARED FOR THE
CITY OF SANTA CRUZ
PUBLIC WORKS DEPARTMENT

DESIGN	BY C. PINKERTON	CHECKED W. CULLUMBER
DETAILS	BY A. CARDOZA	CHECKED W. CULLUMBER
QUANTITIES	BY C. PINKERTON	CHECKED
ORIGINAL SCALE IN INCHES FOR REDUCED PLANS	0 1 2 3	

TRC
MARK IMBRIANI
PROJECT MANAGER

BRIDGE NO. 36C0108
CONTRACT NO.
EA NO.

MURRAY STREET BRIDGE
SEISMIC RETROFIT AND BARRIER REPLACEMENT
BENTS 5 THRU 8 DETAILS NO. 2

DISREGARD PRINTS BEARING EARLIER REVISION DATES
REVISION DATES (PRELIMINARY STAGE ONLY): 03-22-11 05-28-13 09-13-13 07-23-21

SCALE AS SHOWN
SHEET 131 OF 167
VAULT NO. XXXXXXX

Drawing name: H:\1161 – Santa Cruz\Murray Street Bridge Seismic Retrofit\019-Bent 5-8-Det-2.dwg Layout Tab: Layout1 Aug 27,2021 – 2:37pm ACardoza

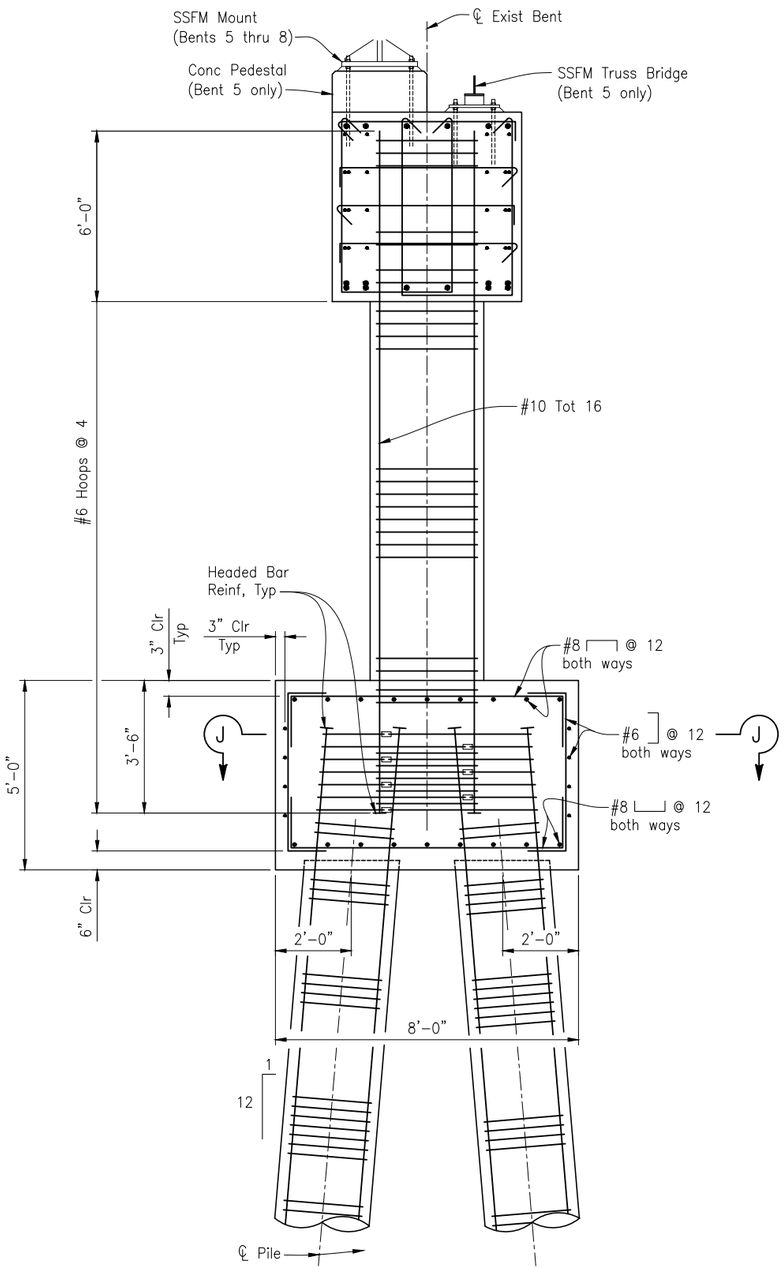

ELEVATION H-H
1/2"=1'-0"

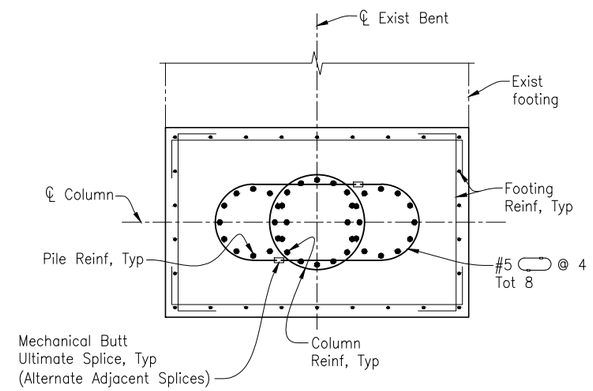

SECTION J-J
1/2"=1'-0"

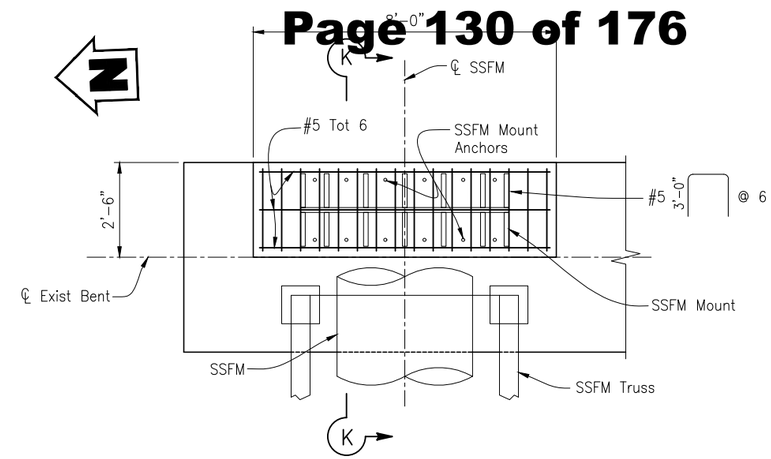

CONCRETE PEDESTAL DETAIL
1/2"=1'-0"

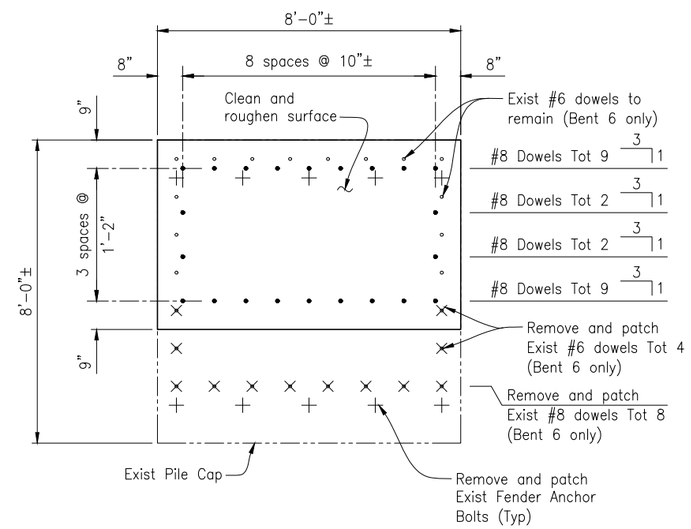

DOWEL LAYOUT
1/2"=1'-0"

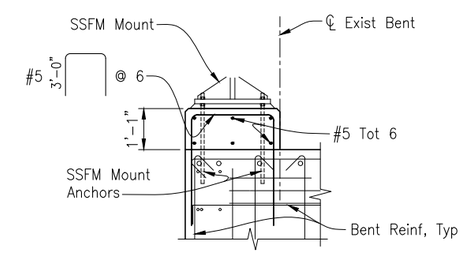

SECTION K-K
1/2"=1'-0"

LEGEND:
- ∘ Indicates Exist dowels (to remain)
- • Indicates Exist Dowels (remove and patch)
- × Indicates new dowels (drill and pressure grout)
- + Indicates Fender Anchor Bolts (remove and patch)

NOTE:
THE CONTRACTOR SHALL VERIFY ALL CONTROLLING FIELD DIMENSIONS BEFORE ORDERING OR FABRICATING ANY MATERIAL.

100% SUBMITTAL
NOT FOR CONSTRUCTION

B-20

REGISTERED PROFESSIONAL ENGINEER CAMERON PINKERTON No. 36C0108 CIVIL STATE OF CALIFORNIA
REGISTERED ENGINEER – CIVIL
TRC Engineers or its officers or agents shall not be responsible for the accuracy or completeness of electronic copies of this plan sheet

CITY OF SANTA CRUZ
PREPARED FOR THE
CITY OF SANTA CRUZ
PUBLIC WORKS DEPARTMENT

DESIGN	BY C. PINKERTON	CHECKED W. CULLUMBER
DETAILS	BY A. CARDOZA	CHECKED W. CULLUMBER
QUANTITIES	BY C. PINKERTON	CHECKED

ORIGINAL SCALE IN INCHES FOR REDUCED PLANS 0 1 2 3

TRC
MARK IMBRIANI
PROJECT MANAGER

BRIDGE NO. 36C0108
CONTRACT NO.
EA NO.

MURRAY STREET BRIDGE
SEISMIC RETROFIT AND BARRIER REPLACEMENT
BENTS 5 THRU 8 DETAILS NO. 3

DISREGARD PRINTS BEARING EARLIER REVISION DATES
REVISION DATES (PRELIMINARY STAGE ONLY) 05-28-13 09-13-13 07-01-15 07-23-21

SCALE AS SHOWN
SHEET 132 OF 167
VAULT NO. XXXXXXX

Drawing name: H:\1161 – Santa Cruz\Murray Street Bridge Seismic Retrofit\020-Bent 5-8-Det-3.dwg Layout Tab: Layout1 Aug 27,2021 – 2:38pm ACardoza

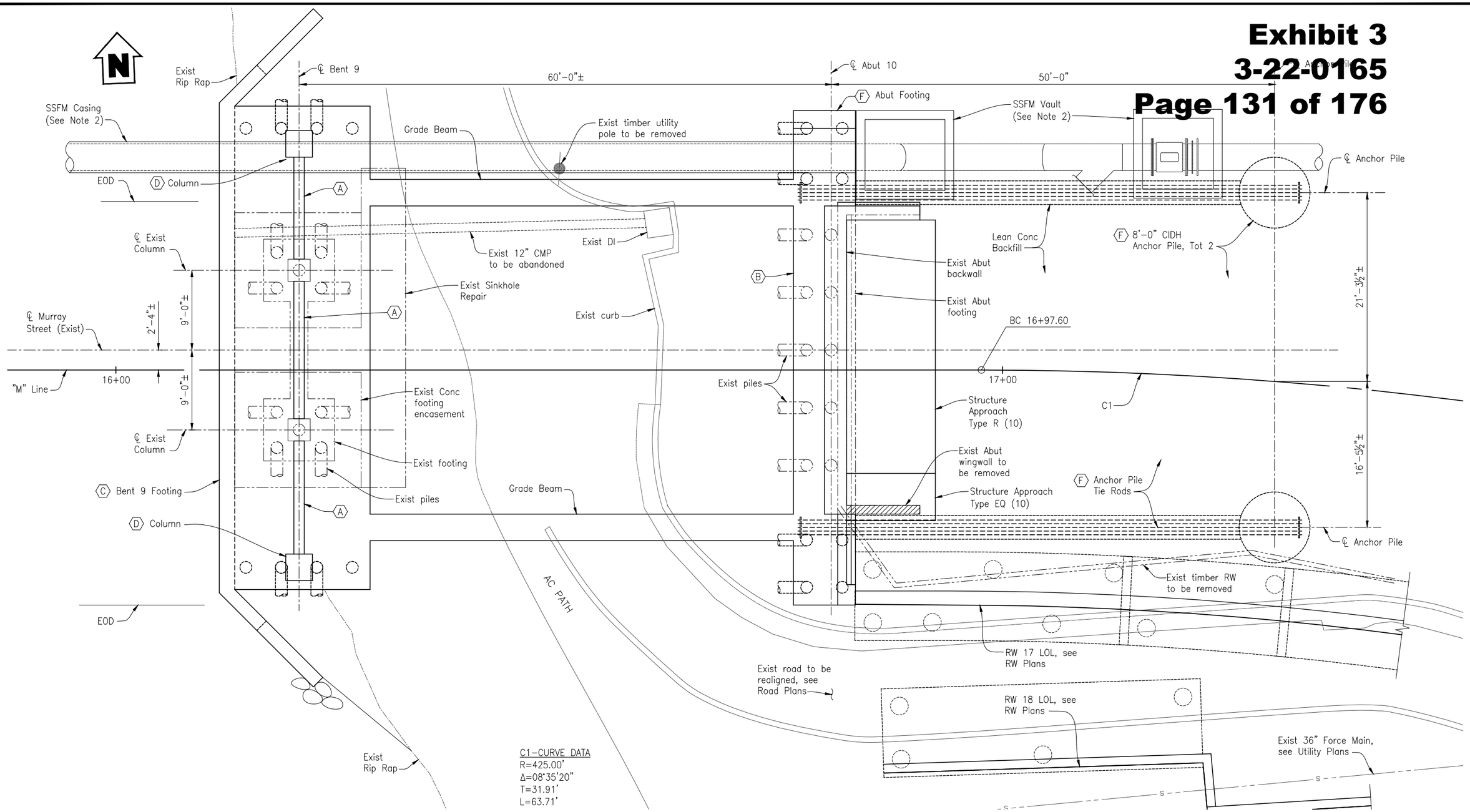

BENT 9 AND ABUT 10 PLAN

3/16"=1'-0"

LEGEND:

- Indicates Existing Structure
- Indicates New Structure
- Indicates Bridge Removal (Portion)
- Indicates 16"ø CISS Pile
- Indicates battered 16"ø CISS Pile
- Indicates 24" CIDH Pile w/ Casing

NOTE:
THE CONTRACTOR SHALL VERIFY ALL CONTROLLING FIELD DIMENSIONS BEFORE ORDERING OR FABRICATING ANY MATERIAL.

RETROFIT LEGEND:

- Ⓐ Concrete Infill Wall
- Ⓑ Shear Key and Seat Extension
- Ⓒ Foundation Retrofit with CISS Piles
- Ⓓ Bent Retrofit with CISS Piles
- Ⓕ Abutment Retrofit with Tie Rods and Anchor Piles

NOTES:

1. Structure Excavation Type D at Bent 9.
2. For Sanitary Sewer Force Main (SSFM) details, see SANITARY SEWER PLANS.

100% SUBMITTAL NOT FOR CONSTRUCTION

B-21

Drawing name: H:\1161 - Santa Cruz\Murray Street Bridge Seismic Retrofit\021-Bent 9 - Abut 10 Layout.dwg Layout Tab: Layout1 Aug 27,2021 - 2:39pm ACardoza

REGISTERED PROFESSIONAL ENGINEER CAMERON PINKERTON No. C 35051 Exp. 31-22 CIVIL STATE OF CALIFORNIA — DRAFT

REGISTERED ENGINEER – CIVIL

TRC Engineers or its officers or agents shall not be responsible for the accuracy or completeness of electronic copies of this plan sheet

CITY OF SANTA CRUZ

PREPARED FOR THE CITY OF SANTA CRUZ PUBLIC WORKS DEPARTMENT

	BY	CHECKED
DESIGN	C. PINKERTON	W. CULLUMBER
DETAILS	G. IMBSEN	W. CULLUMBER
QUANTITIES	C. PINKERTON	

ORIGINAL SCALE IN INCHES FOR REDUCED PLANS 0 1 2 3

TRC

MARK IMBRIANI
PROJECT MANAGER

BRIDGE NO. 36C0108
CONTRACT NO.
EA NO.

MURRAY STREET BRIDGE
SEISMIC RETROFIT AND BARRIER REPLACEMENT
BENT 9 AND ABUTMENT 10 PLAN

DISREGARD PRINTS BEARING EARLIER REVISION DATES → 09-13-13 07-01-15 07-23-21

REVISION DATES (PRELIMINARY STAGE ONLY)

SCALE AS SHOWN
SHEET 133 OF 167
VAULT NO. XXXXXXX

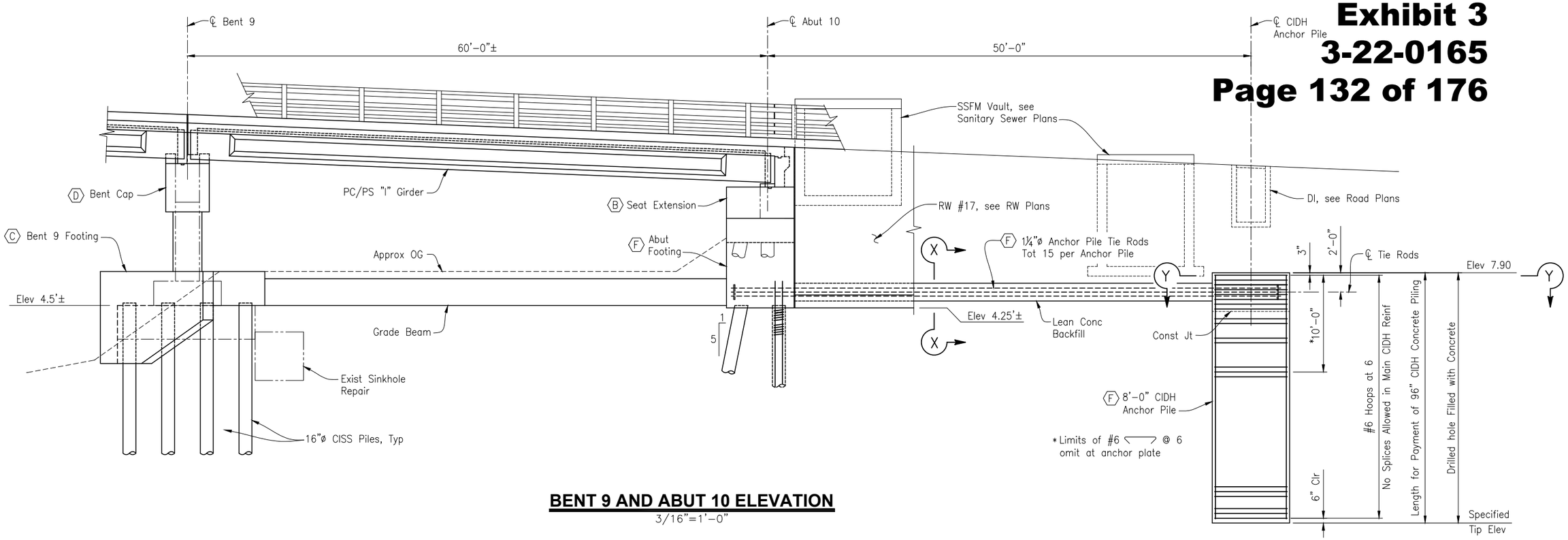

BENT 9 AND ABUT 10 ELEVATION

3/16"=1'-0"

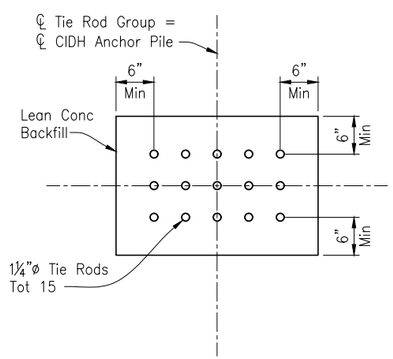

SECTION X-X

1"=1'-0"

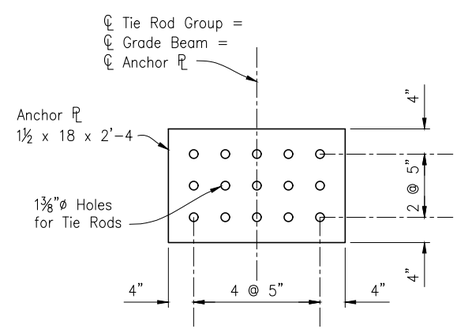

TIE ROD ANCHOR PLATE DETAIL

1"=1'-0"

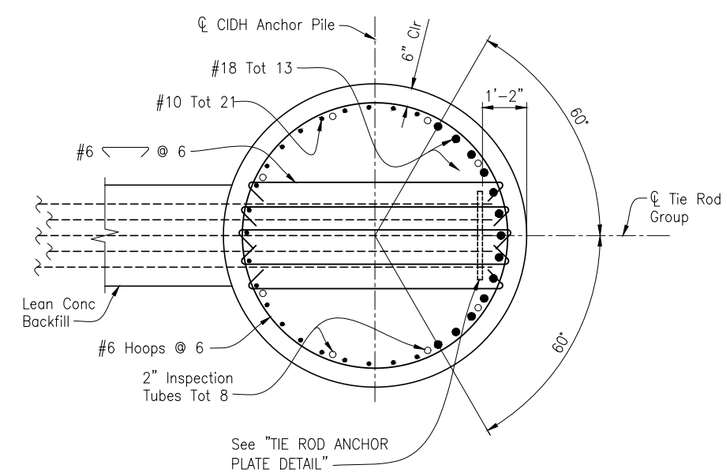

SECTION Y-Y

1/2"=1'-0"

RETROFIT LEGEND:

- (B) Shear Key and Seat Extension
- (C) Foundation Retrofit with CISS Piles
- (D) Bent Retrofit with CISS Piles
- (F) Abutment Retrofit with Tie Rods and Anchor Piles

LEGEND:

- Indicates Existing Structure
- Indicates New Structure

NOTE:
THE CONTRACTOR SHALL VERIFY ALL CONTROLLING FIELD DIMENSIONS BEFORE ORDERING OR FABRICATING ANY MATERIAL.

100% SUBMITTAL NOT FOR CONSTRUCTION

B-22

Drawing name: H:\1161 – Santa Cruz\Murray Street Bridge Seismic Retrofit\022-Bent 9 – Abut 10 Elevation.dwg Layout Tab: Layout1 Aug 27,2021 – 2:39pm ACardoza

REGISTERED PROFESSIONAL ENGINEER CAMERON PINKERTON No. 81-22 CIVIL STATE OF CALIFORNIA

REGISTERED ENGINEER – CIVIL

TRC Engineers or its officers or agents shall not be responsible for the accuracy or completeness of electronic copies of this plan sheet

CITY OF SANTA CRUZ

PREPARED FOR THE CITY OF SANTA CRUZ PUBLIC WORKS DEPARTMENT

	BY	CHECKED
DESIGN	C. PINKERTON	W. CULLUMBER
DETAILS	G. IMBSEN	W. CULLUMBER
QUANTITIES	C. PINKERTON	

ORIGINAL SCALE IN INCHES FOR REDUCED PLANS 0 1 2 3

TRC
MARK IMBRIANI
PROJECT MANAGER

BRIDGE NO. 36C0108
CONTRACT NO.
EA NO.

MURRAY STREET BRIDGE
SEISMIC RETROFIT AND BARRIER REPLACEMENT
BENT 9 AND ABUTMENT 10 ELEVATION

DISREGARD PRINTS BEARING EARLIER REVISION DATES → 09-13-13 07-01-15 07-23-21

REVISION DATES (PRELIMINARY STAGE ONLY)

SCALE AS SHOWN
SHEET 134 OF 167
VAULT NO. XXXXXXX

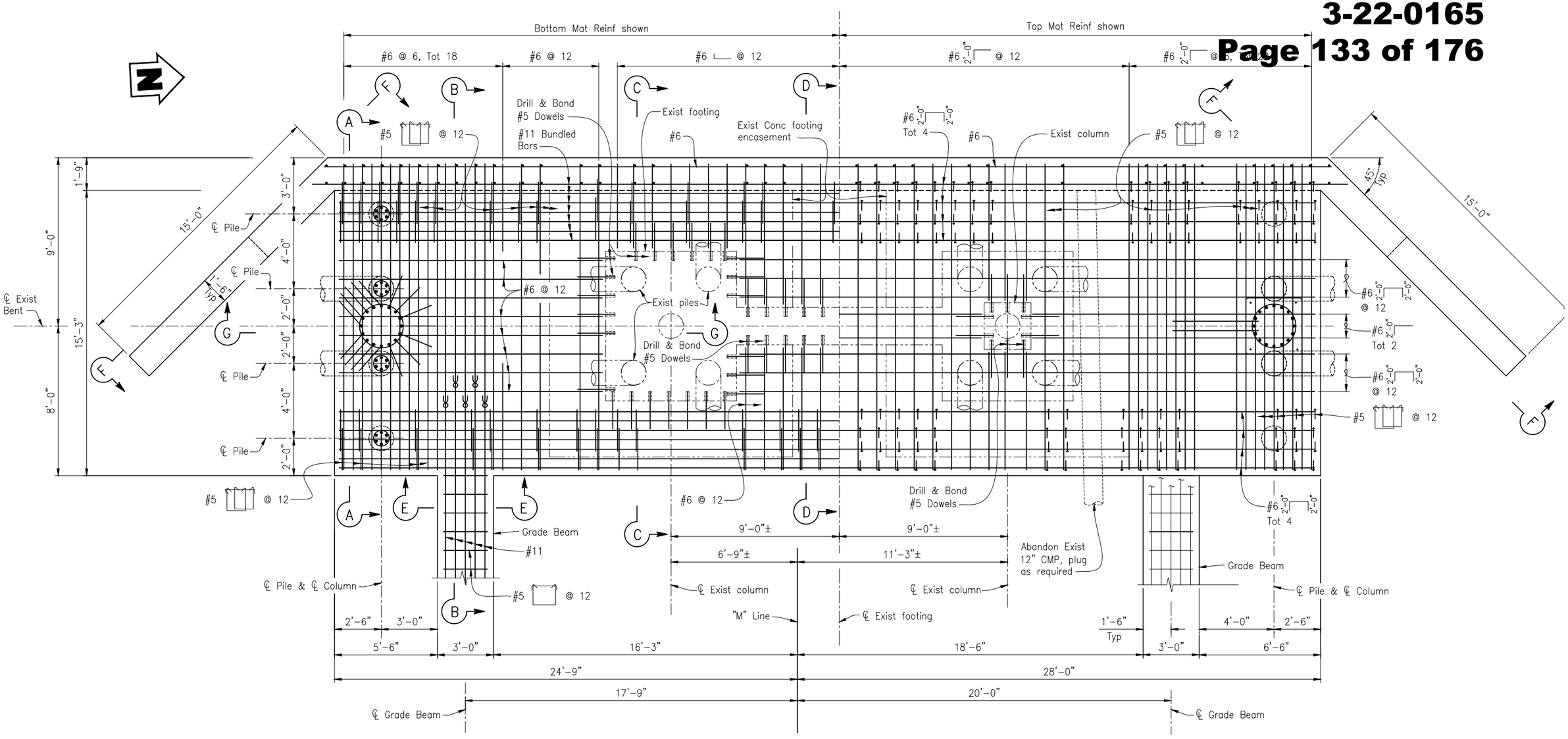

NOTE: Exist Sinkhole Repair not shown.

BENT 9 FOOTING PLAN

3/8"=1'-0"

RETROFIT LEGEND:

- (C) Foundation Retrofit with CISS Piles
- (D) Bent Retrofit with CISS Piles

LEGEND:

- Indicates Existing Structure
- Indicates New Structure
- Indicates Bundled Bars

NOTES:

1. For SECTION A–A thru E–E, see "BENT 9 DETAILS NO. 1" sheet.
2. For ELEVATION F–F and SECTION G–G, see "BENT 9 DETAILS NO. 2" sheet.

NOTE:
THE CONTRACTOR SHALL VERIFY ALL CONTROLLING FIELD DIMENSIONS BEFORE ORDERING OR FABRICATING ANY MATERIAL.

100% SUBMITTAL
NOT FOR CONSTRUCTION

B-23

REGISTERED PROFESSIONAL ENGINEER CAMERON PINKERTON No. 81-22 CIVIL STATE OF CALIFORNIA
REGISTERED ENGINEER – CIVIL
TRC Engineers or its officers or agents shall not be responsible for the accuracy or completeness of electronic copies of this plan sheet

CITY OF SANTA CRUZ

PREPARED FOR THE
CITY OF SANTA CRUZ
PUBLIC WORKS DEPARTMENT

	BY	CHECKED
DESIGN	C. PINKERTON	W. CULLUMBER
DETAILS	G. IMBSEN	W. CULLUMBER
QUANTITIES	C. PINKERTON	

ORIGINAL SCALE IN INCHES FOR REDUCED PLANS 0 1 2 3

TRC
MARK IMBRIANI
PROJECT MANAGER

BRIDGE NO. 36C0108
CONTRACT NO.
EA NO.

MURRAY STREET BRIDGE
SEISMIC RETROFIT AND BARRIER REPLACEMENT
BENT 9 LAYOUT NO. 1

DISREGARD PRINTS BEARING EARLIER REVISION DATES → 08-18-13 07-01-15 07-23-21
REVISION DATES (PRELIMINARY STAGE ONLY)

SCALE AS SHOWN
SHEET 135 OF 167
VAULT NO. XXXXXXX

Drawing name: H:\1161 – Santa Cruz\Murray Street Bridge Seismic Retrofit\023-Bent 9 Plan.dwg Layout Tab: Layout1 Aug 27,2021 – 2:40pm ACarbaza

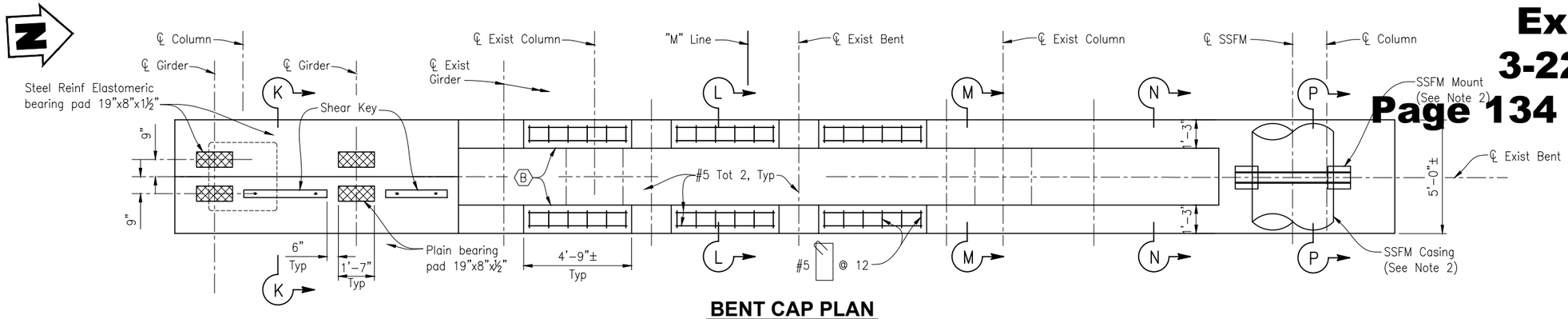

BENT CAP PLAN

3/8"=1'-0"

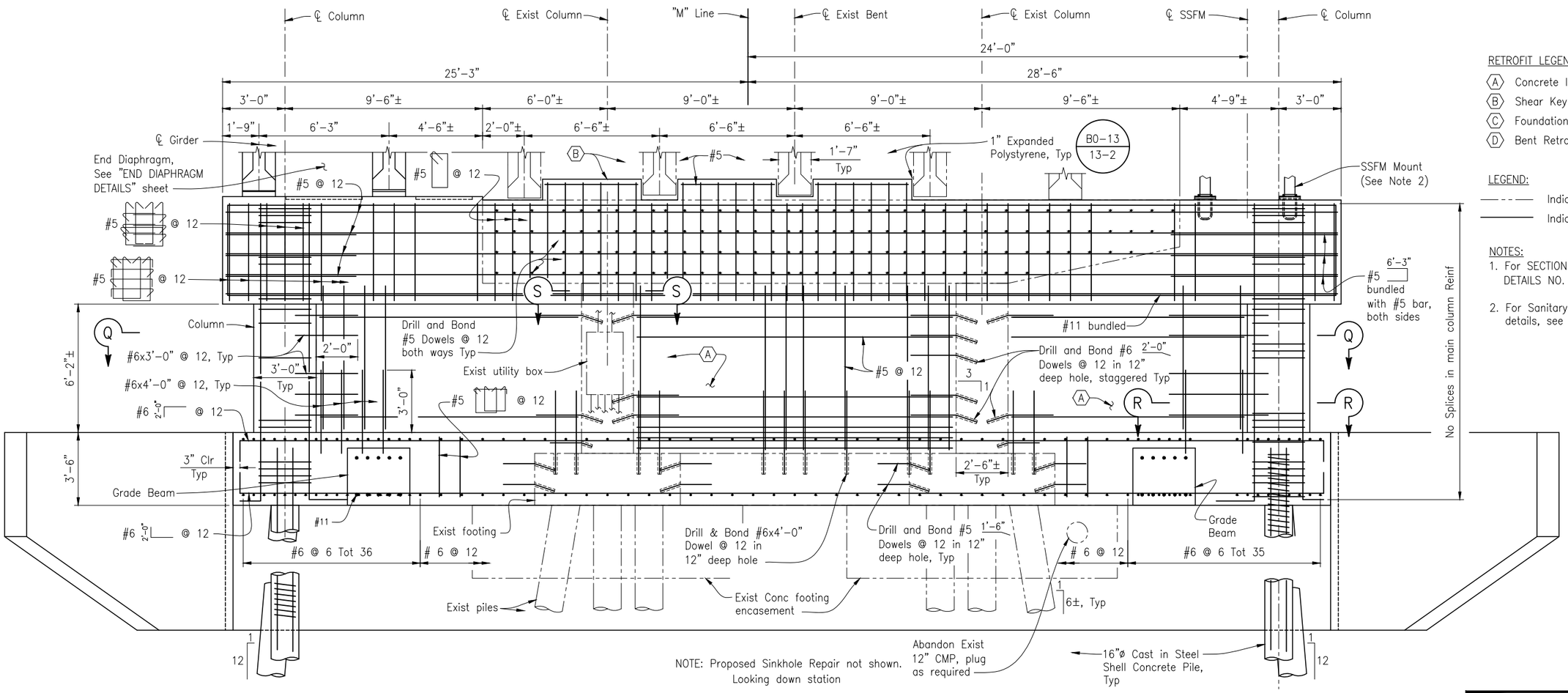

BENT 9 ELEVATION

3/8"=1'-0"

RETROFIT LEGEND:

- (A) Concrete Infill Wall
- (B) Shear Key and Seat Extension
- (C) Foundation Retrofit with CISS Piles
- (D) Bent Retrofit with CISS Piles

LEGEND:

- Indicates Existing Structure
- Indicates New Structure

NOTES:

1. For SECTION K–K thru S–S, see "BENT 9 DETAILS NO. 3" sheet.
2. For Sanitary Sewer Force Main (SSFM) details, see SANITARY SEWER PLANS.

NOTE:
THE CONTRACTOR SHALL VERIFY ALL CONTROLLING FIELD DIMENSIONS BEFORE ORDERING OR FABRICATING ANY MATERIAL.

100% SUBMITTAL
NOT FOR CONSTRUCTION

B-24

REGISTERED PROFESSIONAL ENGINEER CAMERON PINKERTON No. 36C0108 Exp. 03-31-22 CIVIL STATE OF CALIFORNIA

REGISTERED ENGINEER – CIVIL

TRC Engineers or its officers or agents shall not be responsible for the accuracy or completeness of electronic copies of this plan sheet

CITY OF SANTA CRUZ

PREPARED FOR THE
CITY OF SANTA CRUZ
PUBLIC WORKS DEPARTMENT

DESIGN	BY C. PINKERTON	CHECKED W. CULLUMBER
DETAILS	BY G. IMBSEN	CHECKED W. CULLUMBER
QUANTITIES	BY C. PINKERTON	CHECKED
ORIGINAL SCALE IN INCHES FOR REDUCED PLANS	0 1 2 3	

TRC
MARK IMBRIANI
PROJECT MANAGER

BRIDGE NO. 36C0108
CONTRACT NO.
EA NO.

MURRAY STREET BRIDGE
SEISMIC RETROFIT AND BARRIER REPLACEMENT
BENT 9 LAYOUT NO. 2

DISREGARD PRINTS BEARING EARLIER REVISION DATES
REVISION DATES (PRELIMINARY STAGE ONLY) 09-13-13 07-01-15 07-23-21

SCALE AS SHOWN
SHEET 136 OF 167
VAULT NO. XXXXXXX

Drawing name: H:\1161 – Santa Cruz\Murray Street Bridge Seismic Retrofit\024-Bent 9 Elevation.dwg Layout Tab: Layout1 Aug 27,2021 – 2:41pm jCardoza

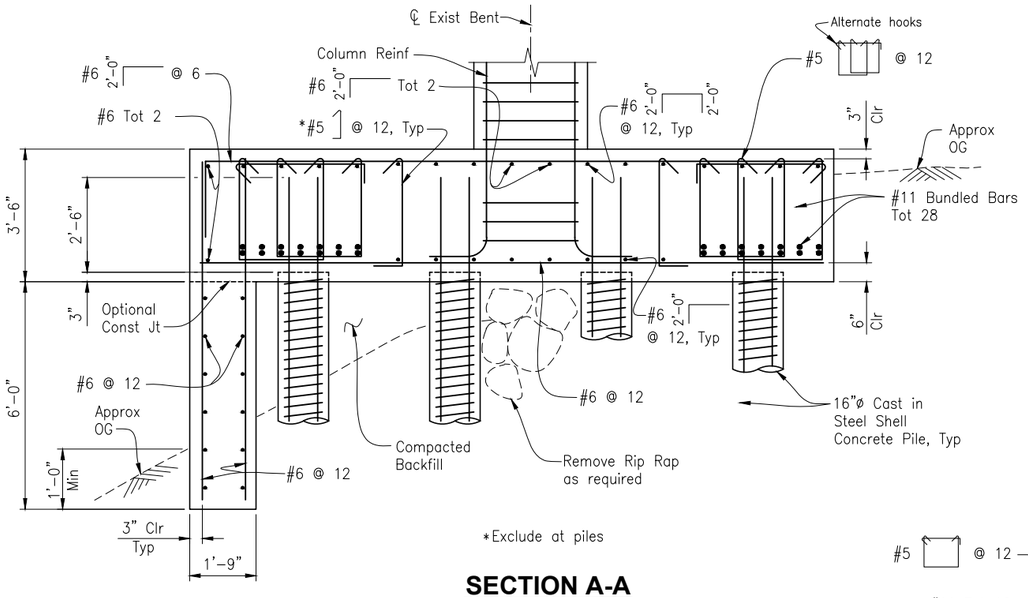

*Exclude at piles

SECTION A-A
1/2"=1'-0"

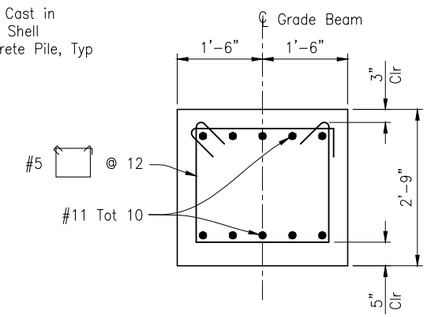

SECTION E-E
1"=1'-0"

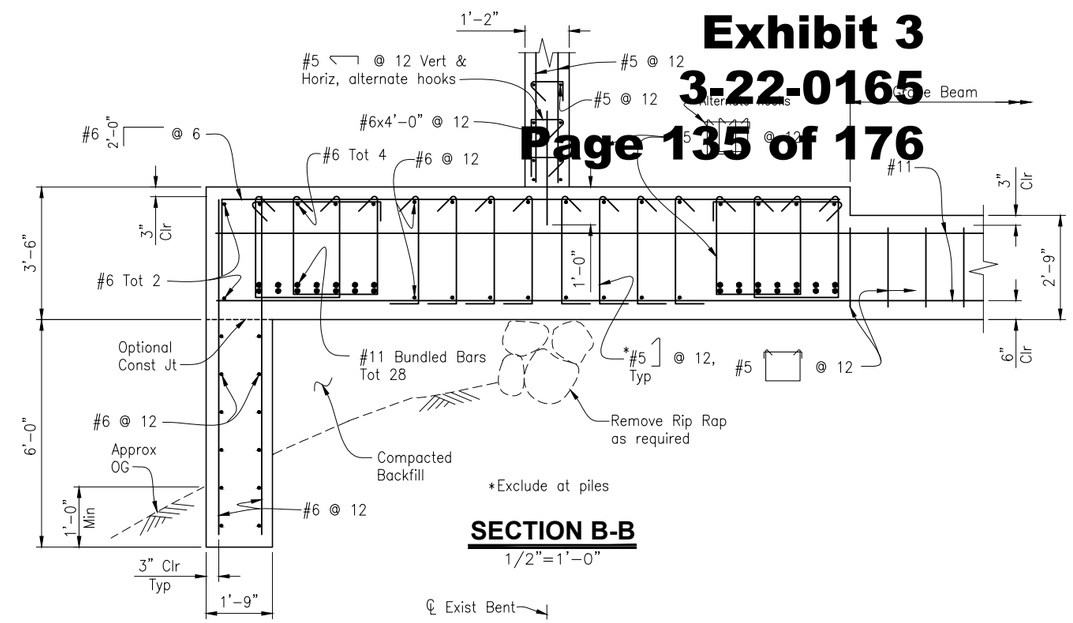

*Exclude at piles

SECTION B-B
1/2"=1'-0"

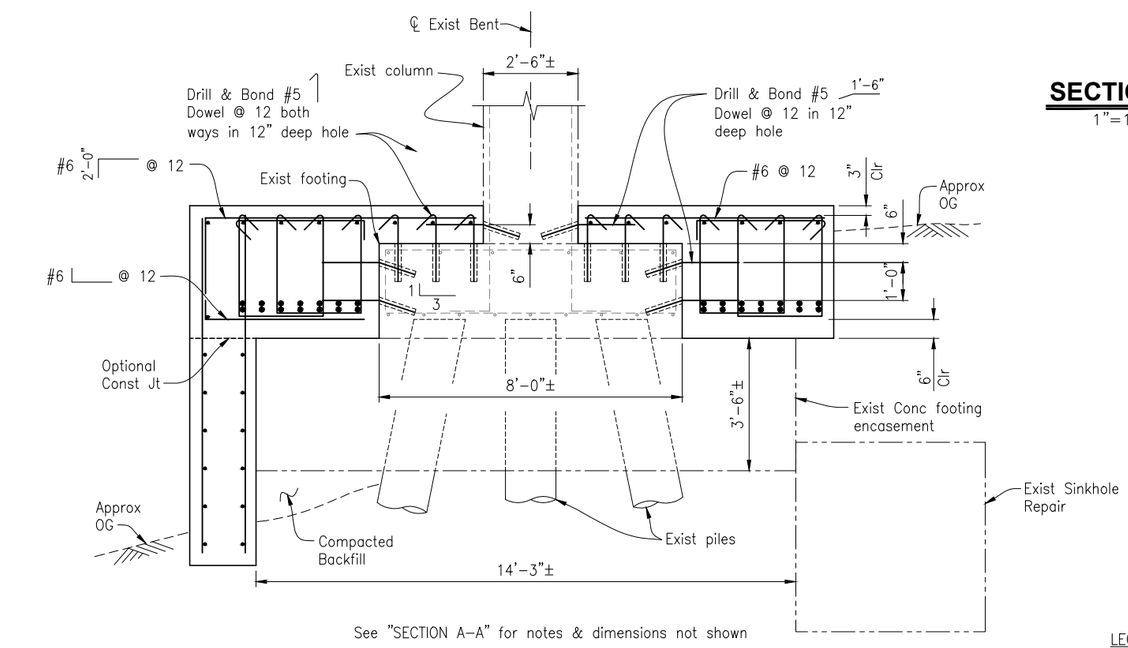

See "SECTION A-A" for notes & dimensions not shown

SECTION C-C
1/2"=1'-0"

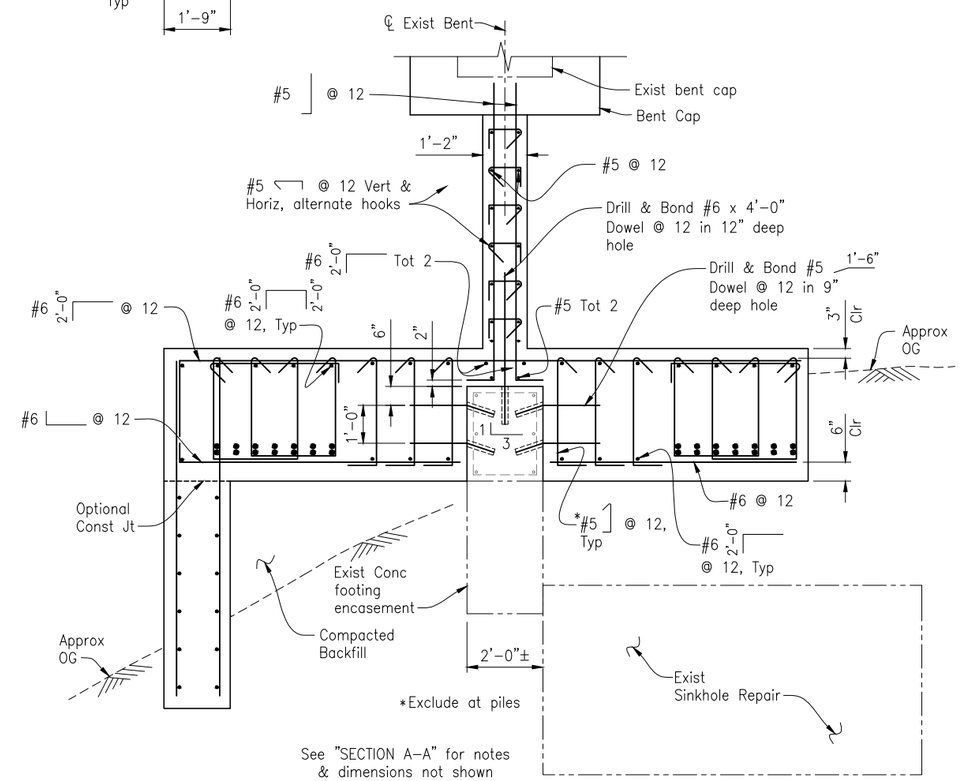

*Exclude at piles

See "SECTION A-A" for notes & dimensions not shown

SECTION D-D
1/2"=1'-0"

LEGEND:

- Indicates Existing Structure
- Indicates New Structure

NOTE:
THE CONTRACTOR SHALL VERIFY ALL CONTROLLING FIELD DIMENSIONS BEFORE ORDERING OR FABRICATING ANY MATERIAL.

100% SUBMITTAL NOT FOR CONSTRUCTION

B-25

REGISTERED PROFESSIONAL ENGINEER CAMERON PINKERTON No. C 51-22 CIVIL STATE OF CALIFORNIA — REGISTERED ENGINEER – CIVIL

TRC Engineers or its officers or agents shall not be responsible for the accuracy or completeness of electronic copies of this plan sheet

CITY OF SANTA CRUZ

PREPARED FOR THE CITY OF SANTA CRUZ PUBLIC WORKS DEPARTMENT

	BY	CHECKED
DESIGN	C. PINKERTON	W. CULLUMBER
DETAILS	G. IMBSEN	W. CULLUMBER
QUANTITIES	C. PINKERTON	

ORIGINAL SCALE IN INCHES FOR REDUCED PLANS 0 1 2 3

TRC
MARK IMBRIANI
PROJECT MANAGER

BRIDGE NO. 36C0108
CONTRACT NO.
EA NO.

MURRAY STREET BRIDGE SEISMIC RETROFIT AND BARRIER REPLACEMENT
BENT 9 DETAILS NO. 1

DISREGARD PRINTS BEARING EARLIER REVISION DATES — REVISION DATES (PRELIMINARY STAGE ONLY) 09-13-13 07-01-15 07-23-21

SCALE AS SHOWN
SHEET 137 OF 167
VAULT NO. XXXXXXX

Drawing name: H:\1161 – Santa Cruz\Murray Street Bridge Seismic Retrofit\025-Bent 9 Details.dwg Layout Tab: Layout1 Aug 27,2021 – 2:41pm ADardoza

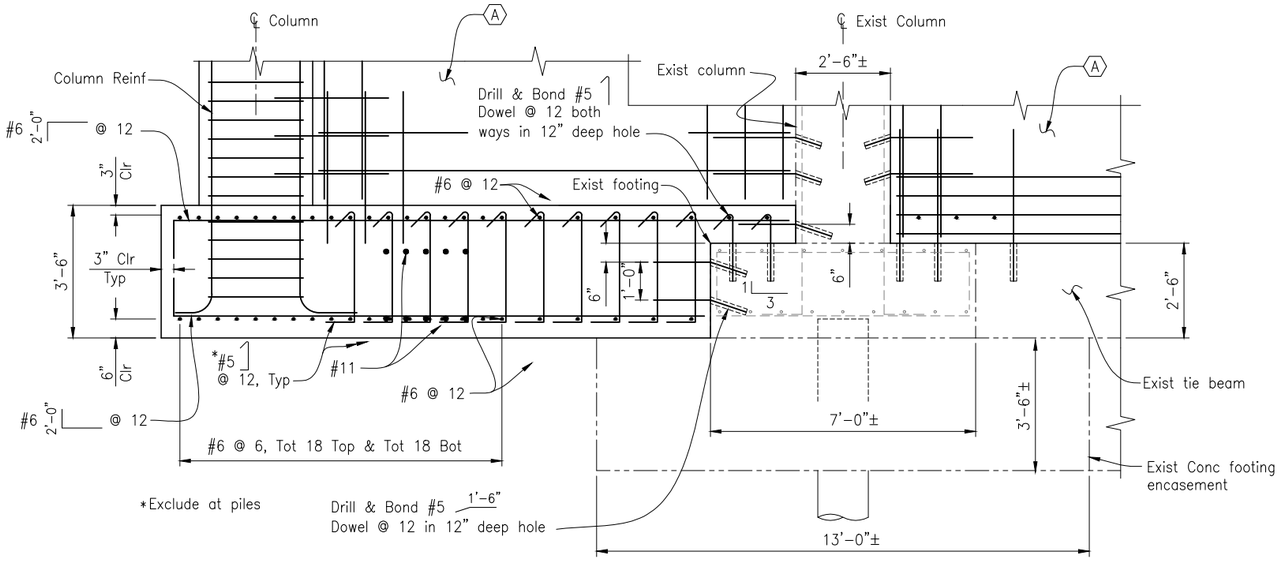

SECTION G-G
1/2"=1'-0"

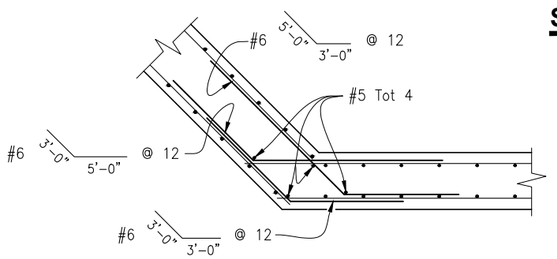

SECTION H-H
1/2"=1'-0"

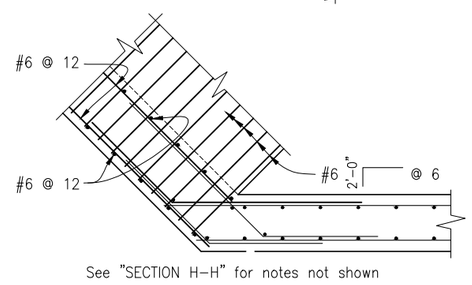

See "SECTION H-H" for notes not shown

SECTION K-K
1/2"=1'-0"

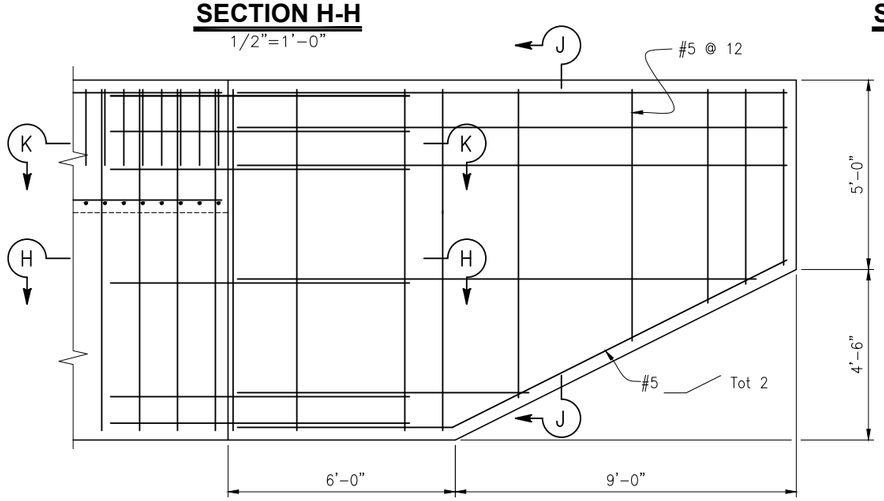

ELEVATION F-F
1/2"=1'-0"

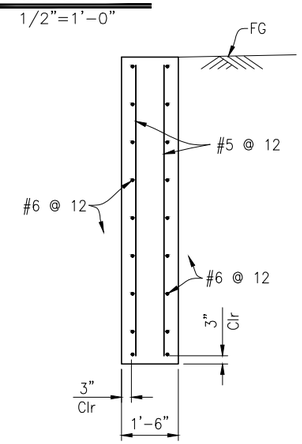

SECTION J-J
1/2"=1'-0"

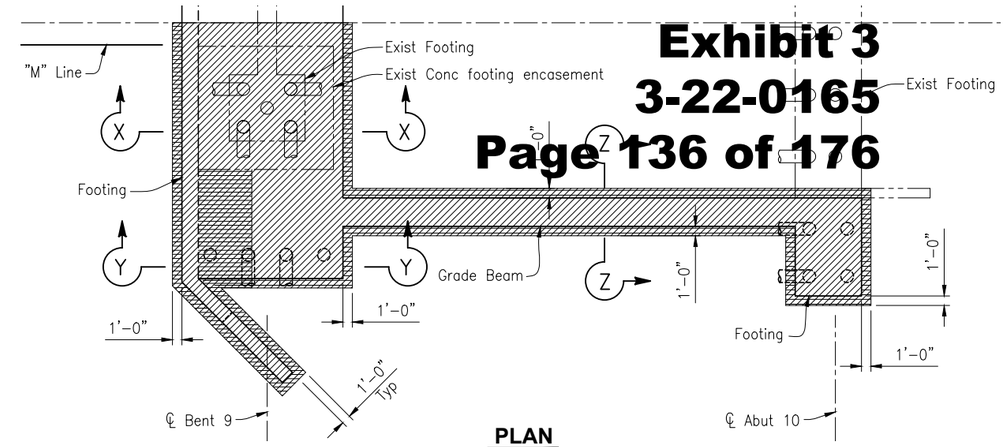

PLAN
1/8"=1'-0"

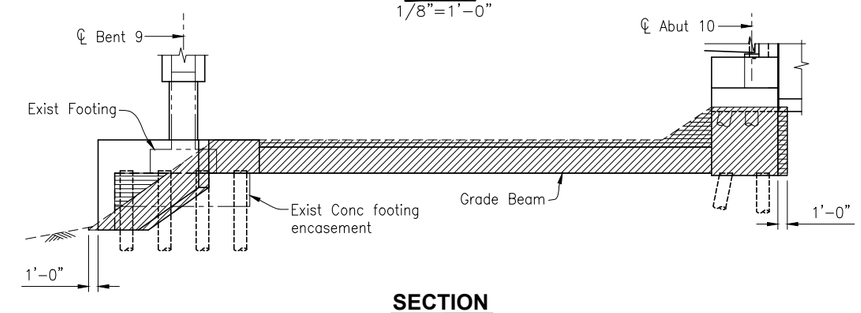

SECTION
1/8"=1'-0"

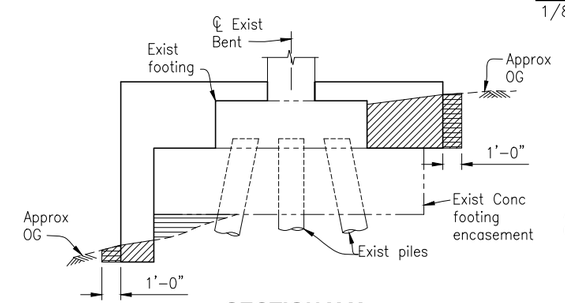

SECTION X-X
1/4"=1'-0"

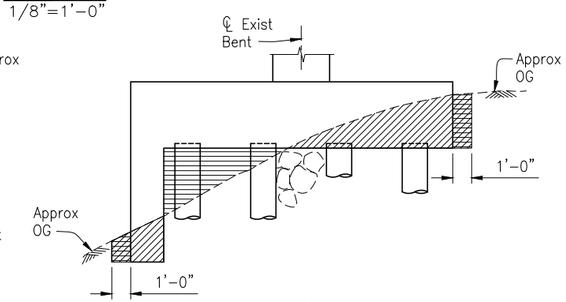

SECTION Y-Y
1/4"=1'-0"

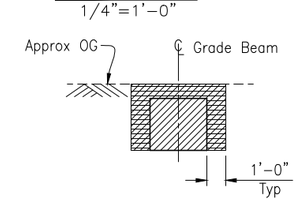

SECTION Z-Z
1/4"=1'-0"

LEGEND:
Indicates Structure Excavation, Bridge
Indicates Structure Backfill, Bridge

RETROFIT LEGEND:
(A) Concrete Infill Wall

LEGEND:
Indicates Existing Structure
Indicates New Structure

LIMITS OF PAYMENT FOR EXCAVATION & BACKFILL

NOTE:
THE CONTRACTOR SHALL VERIFY ALL CONTROLLING FIELD DIMENSIONS BEFORE ORDERING OR FABRICATING ANY MATERIAL.

100% SUBMITTAL
NOT FOR CONSTRUCTION

B-26

REGISTERED PROFESSIONAL ENGINEER CAMERON PINKERTON No. 6 31-22 CIVIL STATE OF CALIFORNIA
REGISTERED ENGINEER – CIVIL
TRC Engineers or its officers or agents shall not be responsible for the accuracy or completeness of electronic copies of this plan sheet

CITY OF SANTA CRUZ
PREPARED FOR THE
CITY OF SANTA CRUZ
PUBLIC WORKS DEPARTMENT

DESIGN	BY C. PINKERTON	CHECKED W CULLUMBER
DETAILS	BY G. IMBSEN	CHECKED W. CULLUMBER
QUANTITIES	BY C. PINKERTON	CHECKED
ORIGINAL SCALE IN INCHES FOR REDUCED PLANS	0 1 2 3	

TRC
MARK IMBRIANI
PROJECT MANAGER

BRIDGE NO. 36C0108
CONTRACT NO.
EA NO.

MURRAY STREET BRIDGE
SEISMIC RETROFIT AND BARRIER REPLACEMENT
BENT 9 DETAILS NO. 2

DISREGARD PRINTS BEARING EARLIER REVISION DATES
REVISION DATES (PRELIMINARY STAGE ONLY) 09-13-13 07-01-15 07-23-21

SCALE AS SHOWN
SHEET 138 OF 167
VAULT NO. XXXXXXX

Drawing name: H:\1161 – Santa Cruz\Murray Street Bridge Seismic Retrofit\026-Bent 9 Details-02.dwg Layout Tab: Layout1 Aug 27,2021 – 2:42pm ACardoza

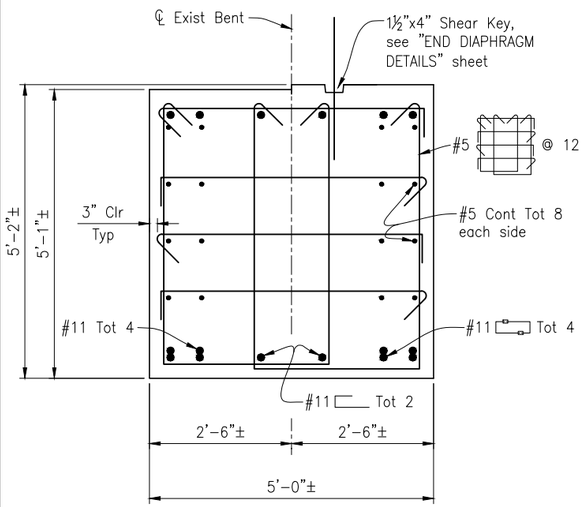

SECTION K-K
3/4"=1'-0"

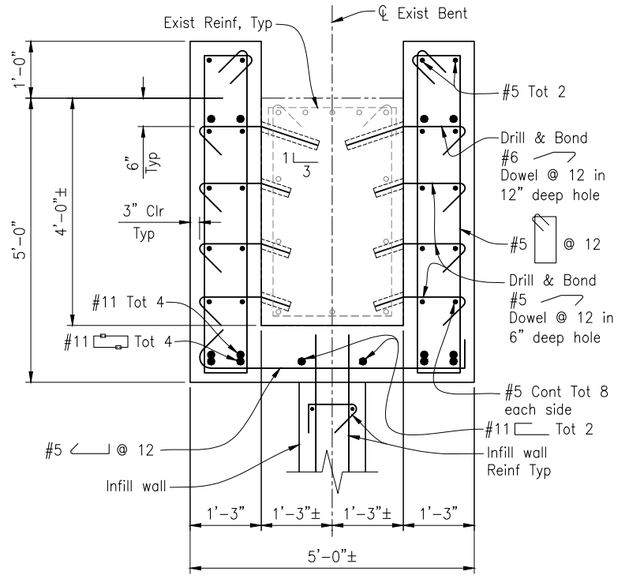

SECTION L-L
3/4"=1'-0"

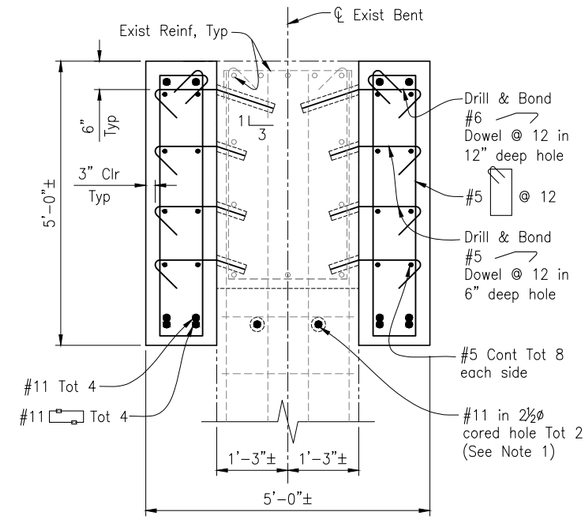

SECTION M-M
3/4"=1'-0"

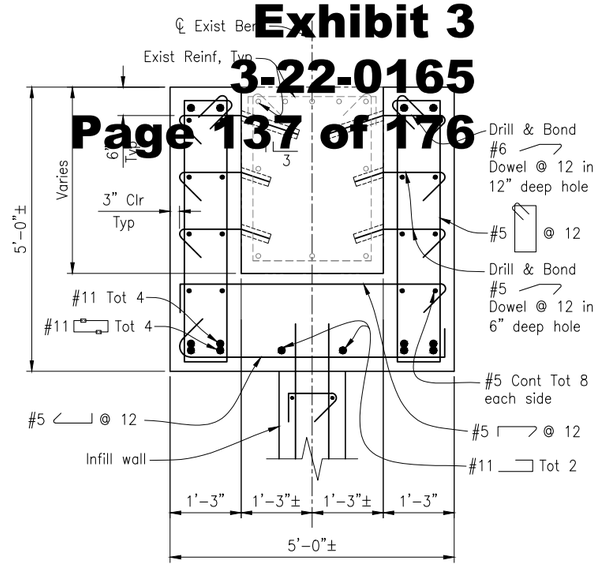

SECTION N-N
3/4"=1'-0"

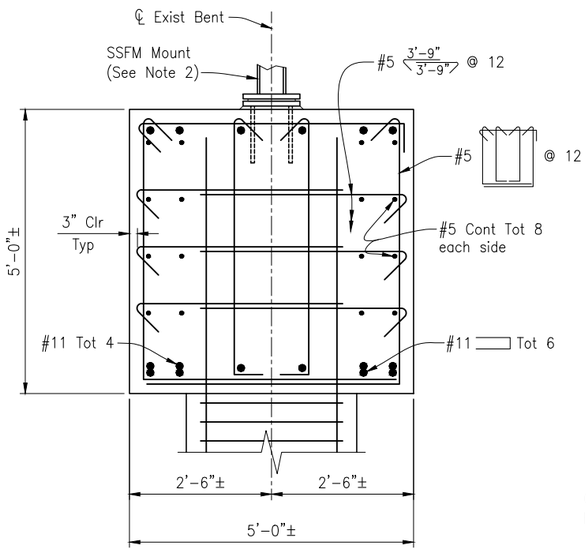

SECTION P-P
3/4"=1'-0"

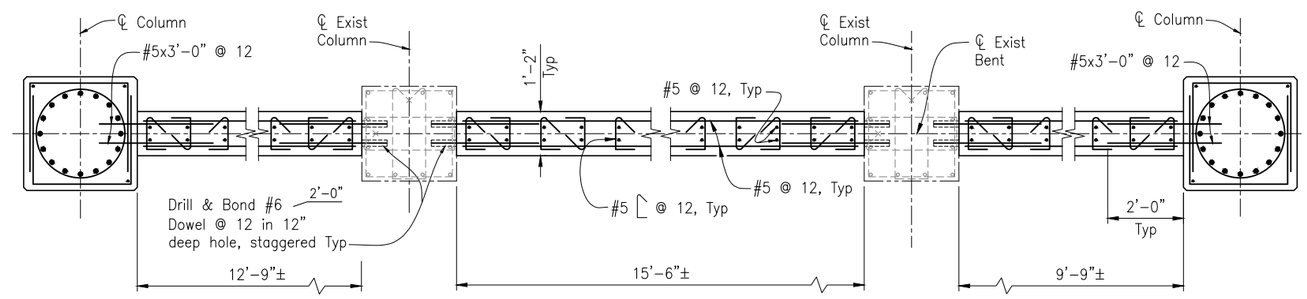

SECTION Q-Q
1/2"=1'-0"

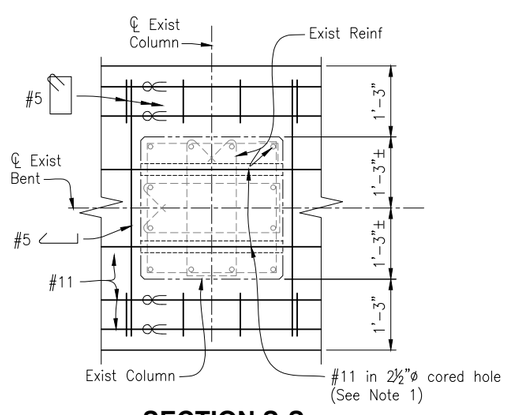

SECTION S-S
1/2"=1'-0"

NOTES:

1. Holes cored through existing column to miss existing reinforcement. Pressure grout bars in cored holes.
2. For Sanitary Sewer Force Main (SSFM) details, see SANITARY SEWER PLANS.

LEGEND:

- Indicates Existing Structure
- Indicates New Structure
- Indicates bundled bars

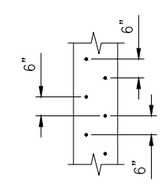

DRILL & BOND STAGGER DETAIL
1/2"=1'-0"

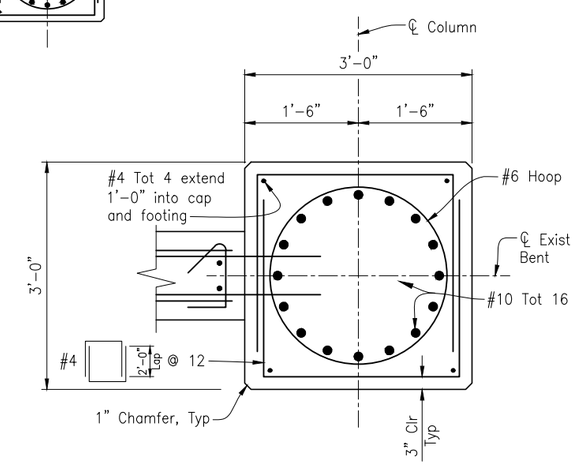

SECTION R-R
1"=1'-0"

NOTE:
THE CONTRACTOR SHALL VERIFY ALL CONTROLLING FIELD DIMENSIONS BEFORE ORDERING OR FABRICATING ANY MATERIAL.

100% SUBMITTAL
NOT FOR CONSTRUCTION

B-27

Drawing name: H:\1161 - Santa Cruz\Murray Street Bridge Seismic Retrofit\027-Bent 9-Details-03.dwg Layout Tab: Layout1 Aug 27,2021 - 2:42pm ACardoza

REGISTERED PROFESSIONAL ENGINEER CAMERON PINKERTON No. 3-31-22 CIVIL STATE OF CALIFORNIA
REGISTERED ENGINEER – CIVIL
TRC Engineers or its officers or agents shall not be responsible for the accuracy or completeness of electronic copies of this plan sheet

CITY OF SANTA CRUZ

PREPARED FOR THE
CITY OF SANTA CRUZ
PUBLIC WORKS DEPARTMENT

	BY	CHECKED
DESIGN	C. PINKERTON	W. CULLUMBER
DETAILS	G. IMBSEN	W. CULLUMBER
QUANTITIES	C. PINKERTON	

ORIGINAL SCALE IN INCHES FOR REDUCED PLANS 0 1 2 3

TRC
MARK IMBRIANI
PROJECT MANAGER

BRIDGE NO. 36C0108
CONTRACT NO.
EA NO.

MURRAY STREET BRIDGE
SEISMIC RETROFIT AND BARRIER REPLACEMENT
BENT 9 DETAILS NO. 3

DISREGARD PRINTS BEARING EARLIER REVISION DATES
REVISION DATES (PRELIMINARY STAGE ONLY) 09-13-13 07-01-15 07-23-21

SCALE AS SHOWN
SHEET 139 OF 167
VAULT NO. XXXXXXX

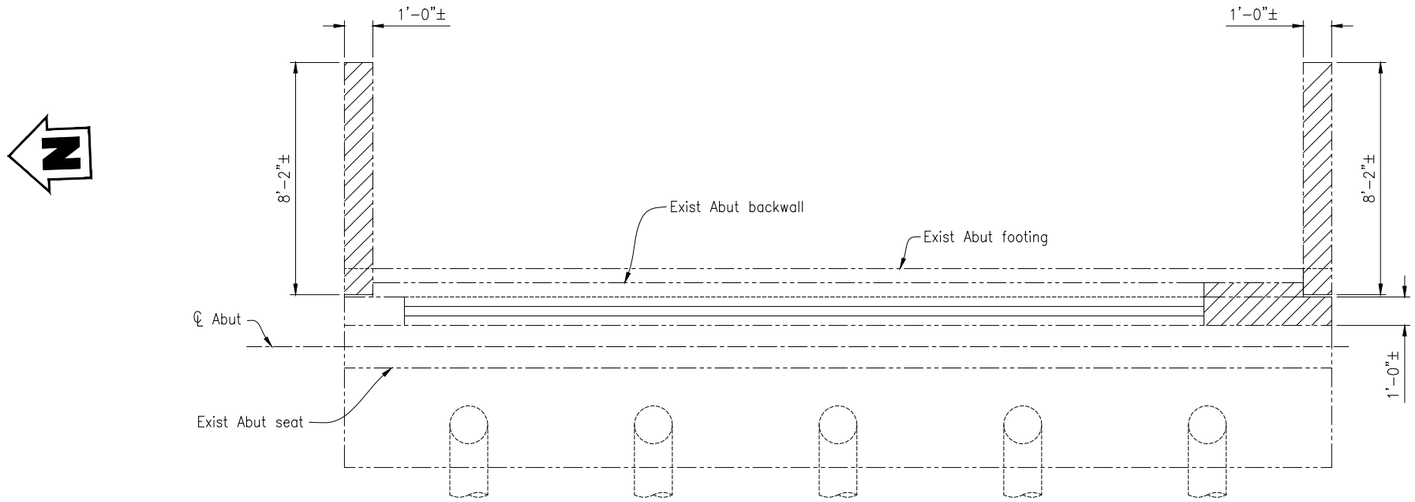

PLAN
3/8"=1'-0"

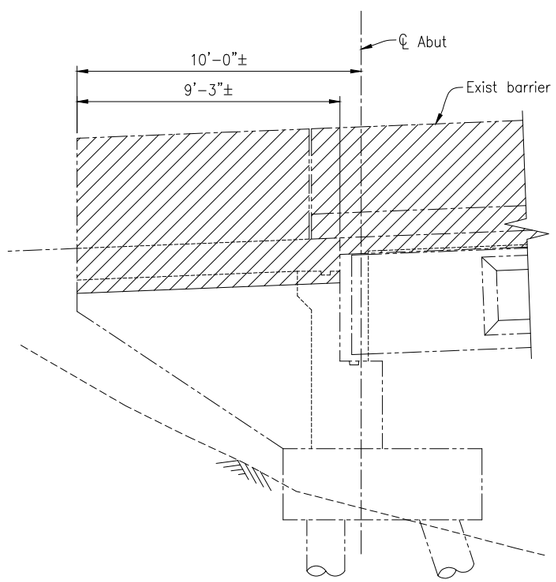

VIEW A-A
3/8"=1'-0"

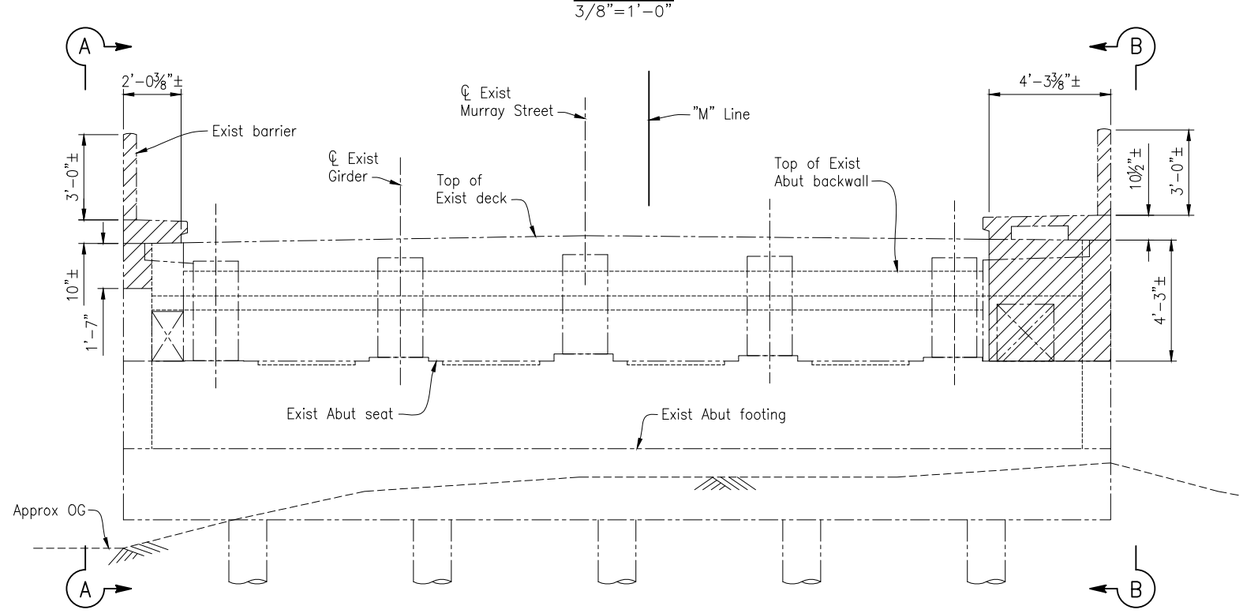

ELEVATION
3/8"=1'-0"

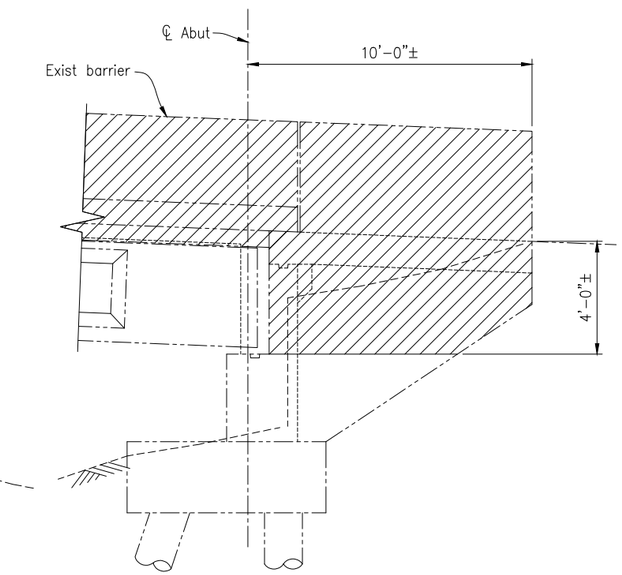

VIEW B-B
3/8"=1'-0"

LEGEND:
- Indicates Existing Structure
- Indicates New Structure
- Indicates Bridge Removal (Portion)

NOTE:
THE CONTRACTOR SHALL VERIFY ALL CONTROLLING FIELD DIMENSIONS BEFORE ORDERING OR FABRICATING ANY MATERIAL.

100% SUBMITTAL NOT FOR CONSTRUCTION

B-28

REGISTERED PROFESSIONAL ENGINEER — CAMERON PINKERTON — No. C 63051 — CIVIL — STATE OF CALIFORNIA — 10-31-22

REGISTERED ENGINEER – CIVIL

TRC Engineers or its officers or agents shall not be responsible for the accuracy or completeness of electronic copies of this plan sheet

CITY OF SANTA CRUZ

PREPARED FOR THE
CITY OF SANTA CRUZ
PUBLIC WORKS DEPARTMENT

DESIGN	BY C. PINKERTON	CHECKED W. CULLUMBER	
DETAILS	BY G. IMBSEN	CHECKED W. CULLUMBER	
QUANTITIES	BY C. PINKERTON	CHECKED	
ORIGINAL SCALE IN INCHES FOR REDUCED PLANS	0 1 2 3		

TRC
MARK IMBRIANI
PROJECT MANAGER

BRIDGE NO. 36C0108
CONTRACT NO.
EA NO.

MURRAY STREET BRIDGE
SEISMIC RETROFIT AND BARRIER REPLACEMENT
ABUTMENT 10 PARTIAL REMOVAL

DISREGARD PRINTS BEARING EARLIER REVISION DATES → 09-13-13 07-01-15
REVISION DATES (PRELIMINARY STAGE ONLY)

SCALE AS SHOWN
SHEET 140 OF 167
VAULT NO. XXXXXXX

Drawing name: H:\1161 – Santa Cruz\Murray Street Bridge Seismic Retrofit\028-Abut 10 B-Removal.dwg Layout Tab: Layout1 Aug 27,2021 – 2:43pm ACardoza

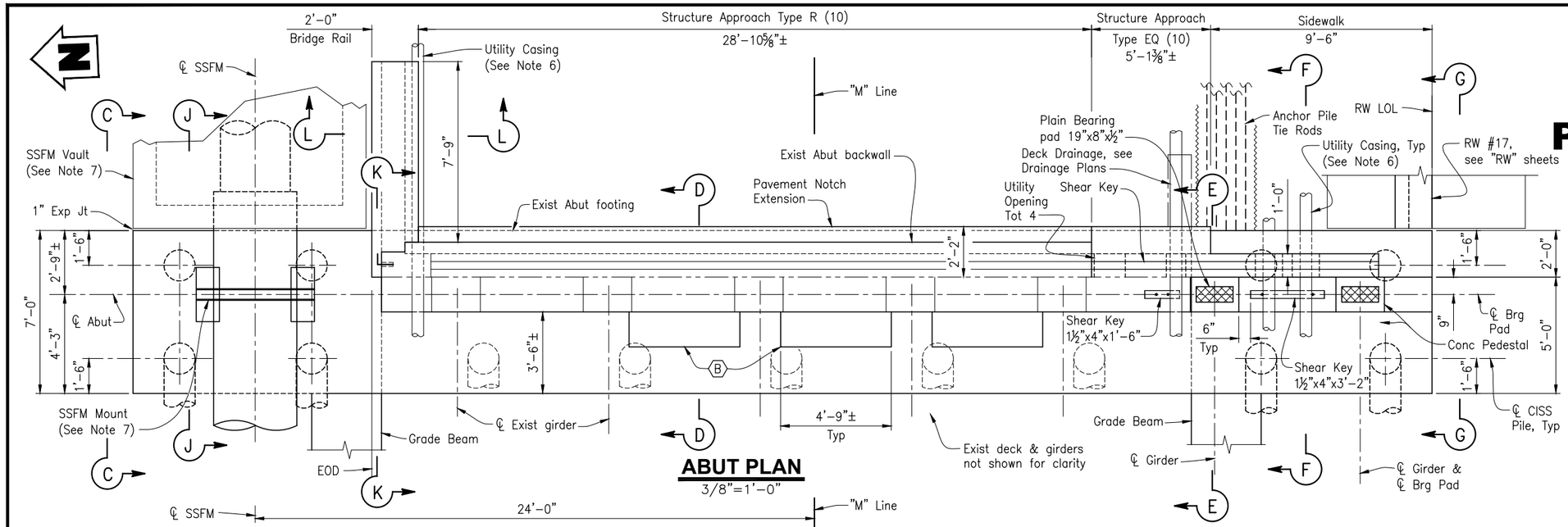

ABUT PLAN
3/8"=1'-0"

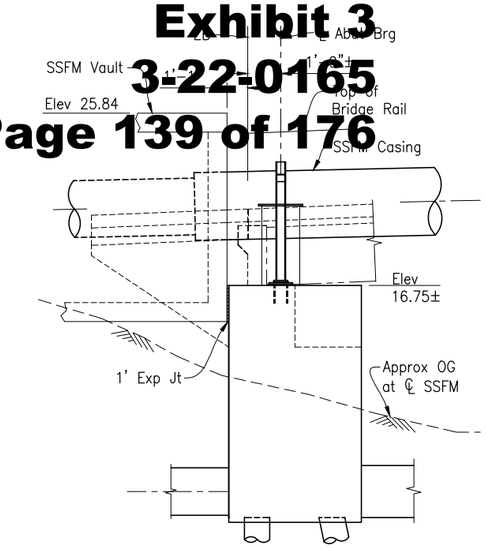

VIEW C-C
1/4"=1'-0"

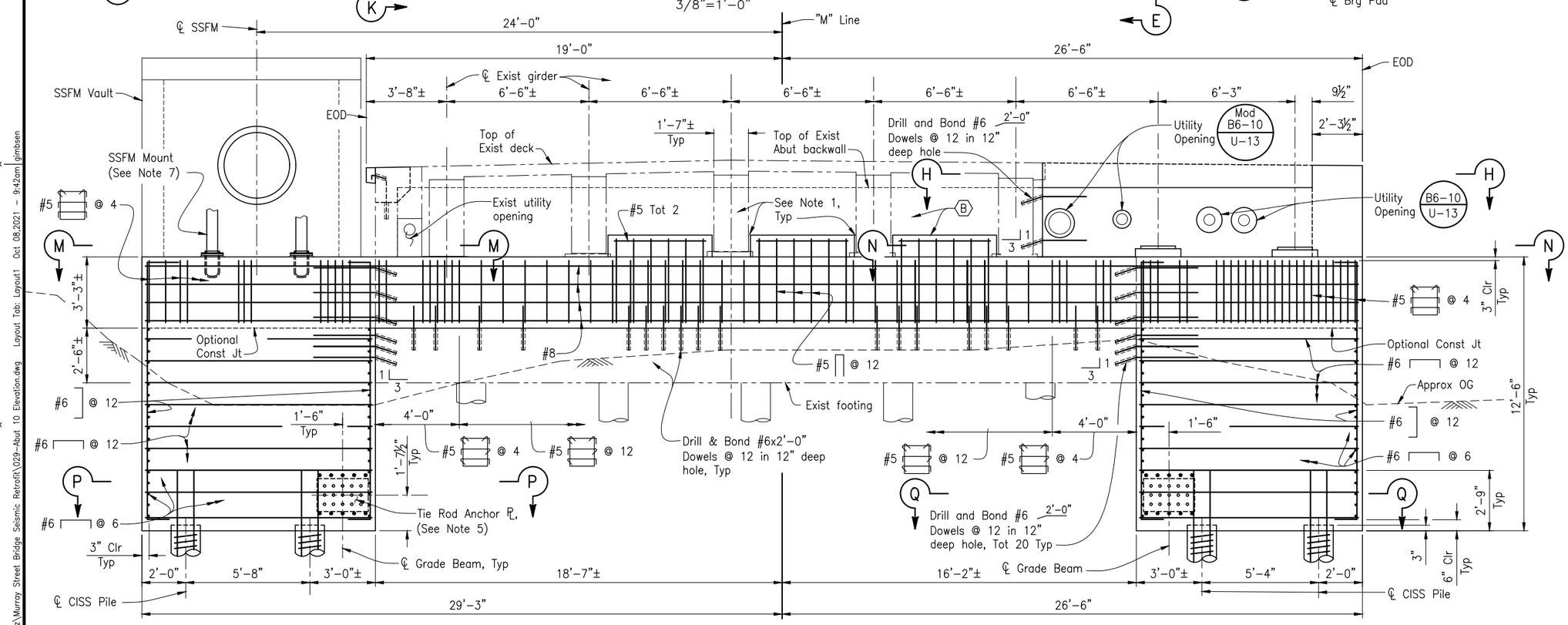

ABUT 10 ELEVATION
3/8"=1'-0"

RETROFIT LEGEND:

(B) Shear Key and Seat Extension

LEGEND:

- - - - - Indicates Existing Structure
——— Indicates New Structure

NOTES:

1. 1" Expanded Polystyrene (B0-13 / 13-2)
2. For SECTION D-D thru H-H, see "ABUTMENT 10 DETAILS NO. 1' sheet.
3. For SECTION J-J thru L-L, see "ABUTMENT 10 DETAILS NO. 2" sheet.
4. For SECTION M-M thru Q-Q, see "ABUTMENT 10 DETAILS NO. 3" sheet.
5. See "TIE ROD ANCHOR PLATE DETAIL" on "BENT 9 AND ABUTMENT 10 ELEVATION" sheet.
6. Casings to extend to Joint Utility Trench. For casing sizes, see "TYPICAL SECTION" sheet.
7. For Sanitary Sewer Force Main (SSFM) details, see SANITARY SEWER PLANS.

NOTE:
THE CONTRACTOR SHALL VERIFY ALL CONTROLLING FIELD DIMENSIONS BEFORE ORDERING OR FABRICATING ANY MATERIAL.

100% SUBMITTAL NOT FOR CONSTRUCTION

B-29

REGISTERED PROFESSIONAL ENGINEER — CAMERON PINKERTON — No. C 51-22 — CIVIL — STATE OF CALIFORNIA
REGISTERED ENGINEER – CIVIL
TRC Engineers or its officers or agents shall not be responsible for the accuracy or completeness of electronic copies of this plan sheet

PREPARED FOR THE
CITY OF SANTA CRUZ
PUBLIC WORKS DEPARTMENT

DESIGN	BY C. PINKERTON	CHECKED W. CULLUMBER
DETAILS	BY G. IMBSEN	CHECKED W. CULLUMBER
QUANTITIES	BY C. PINKERTON	CHECKED
ORIGINAL SCALE IN INCHES FOR REDUCED PLANS	0 1 2 3	

TRC
MARK IMBRIANI
PROJECT MANAGER

BRIDGE NO. 36C0108
CONTRACT NO.
EA NO.

MURRAY STREET BRIDGE
SEISMIC RETROFIT AND BARRIER REPLACEMENT
ABUTMENT 10 PLAN & ELEVATION

DISREGARD PRINTS BEARING EARLIER REVISION DATES
REVISION DATES (PRELIMINARY STAGE ONLY): 09-13-13 07-01-15 04-30-20 07-23-21

SCALE AS SHOWN
SHEET 141 OF 167
VAULT NO. XXXXXXX

Drawing name: H:\1161 – Santa Cruz\Murray Street Bridge Seismic Retrofit\029-Abut 10 Elevation.dwg Layout Tab: Layout1 Oct 08,2021 – 9:42am gimbsen

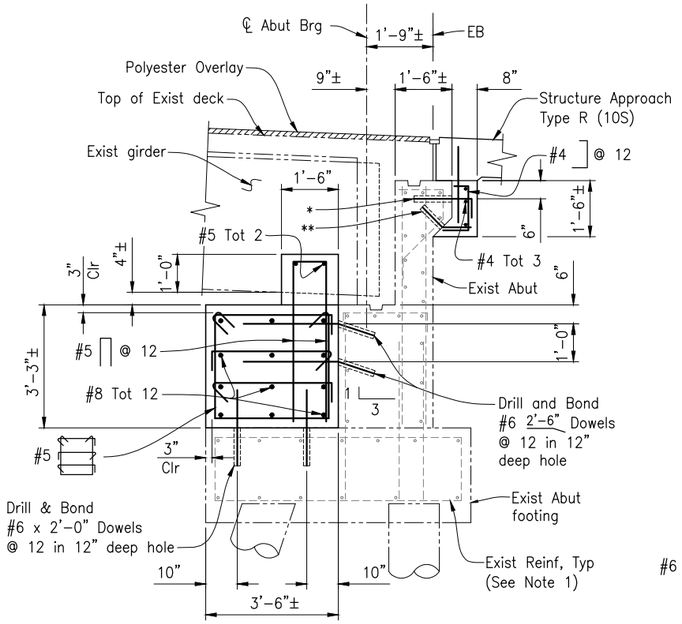

* Drill and Bond (Chemical Adhesive) #6 Dowels @ 12 in 12" deep hole

** Drill and Bond (Chemical Adhesive) #4 Dowels @ 24 in 9" deep hole

SECTION D-D
1/2"=1'-0"

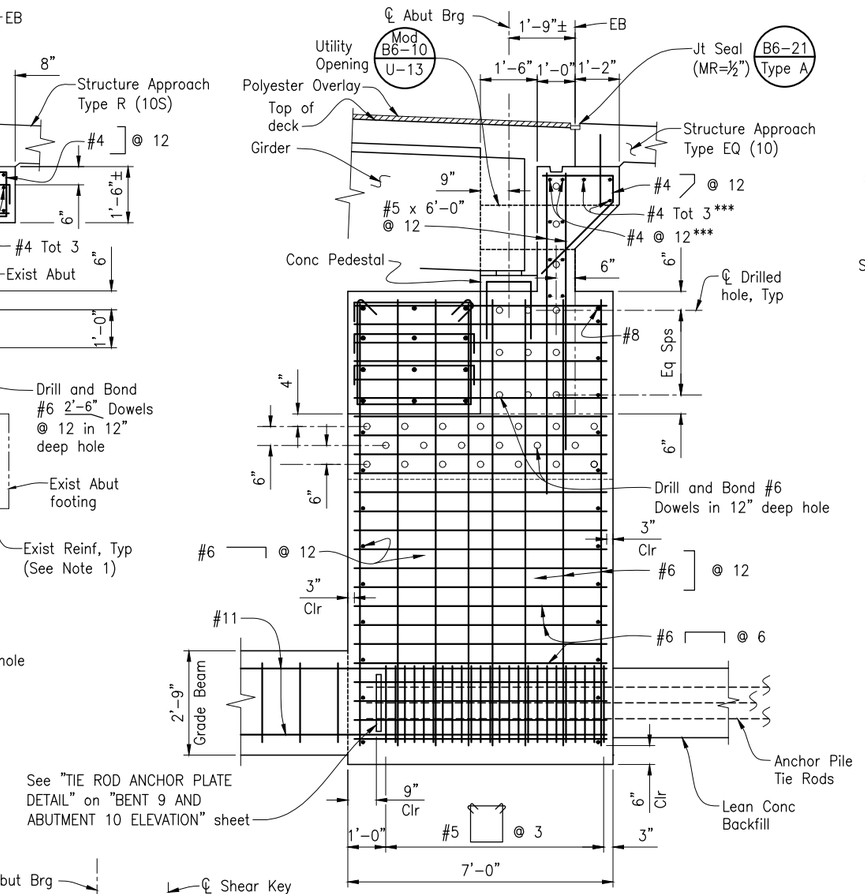

SECTION E-E
1/2"=1'-0"

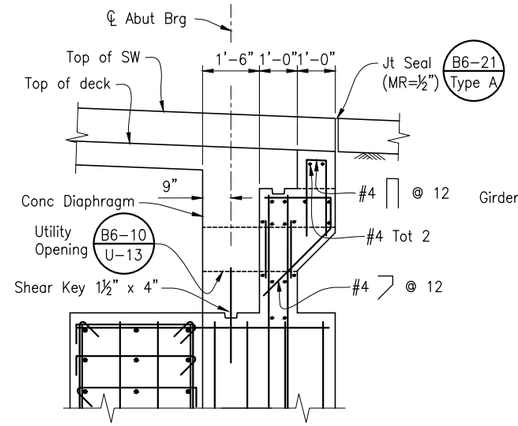

SECTION F-F
1/2"=1'-0"

*** Cont into DETAIL 2

NOTES:

1. The Contractor shall protect existing reinforcement.

LEGEND:

Indicates Existing Structure

Indicates New Structure

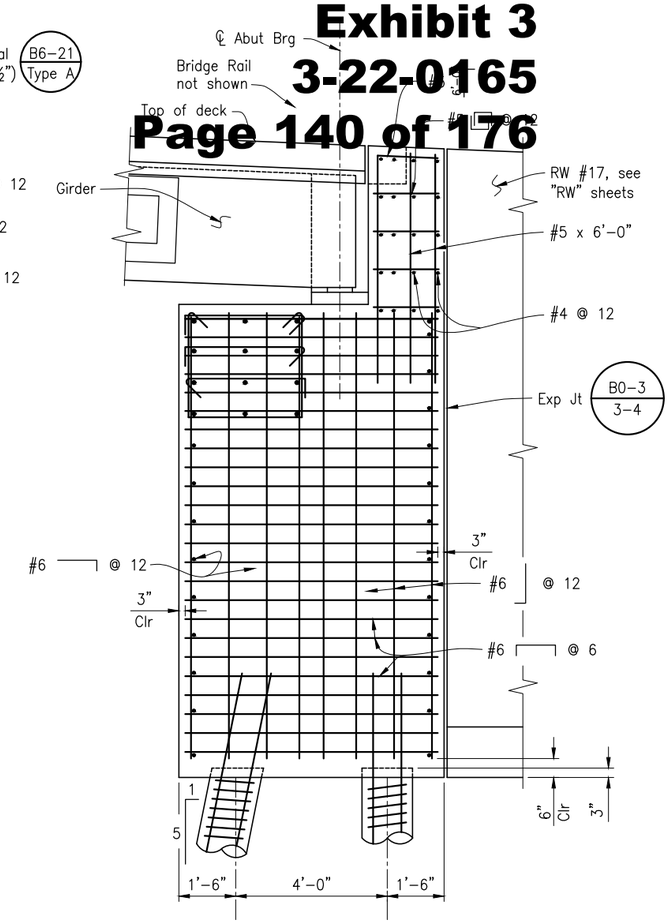

SECTION G-G
1/2"=1'-0"

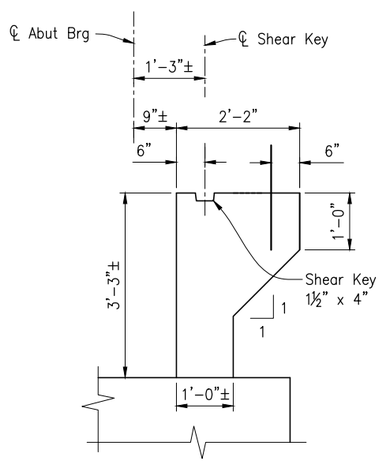

DETAIL 1

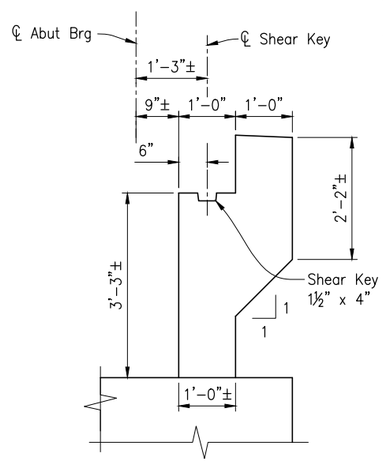

DETAIL 2

ABUT BACKWALL DETAILS
3/4"=1'-0"

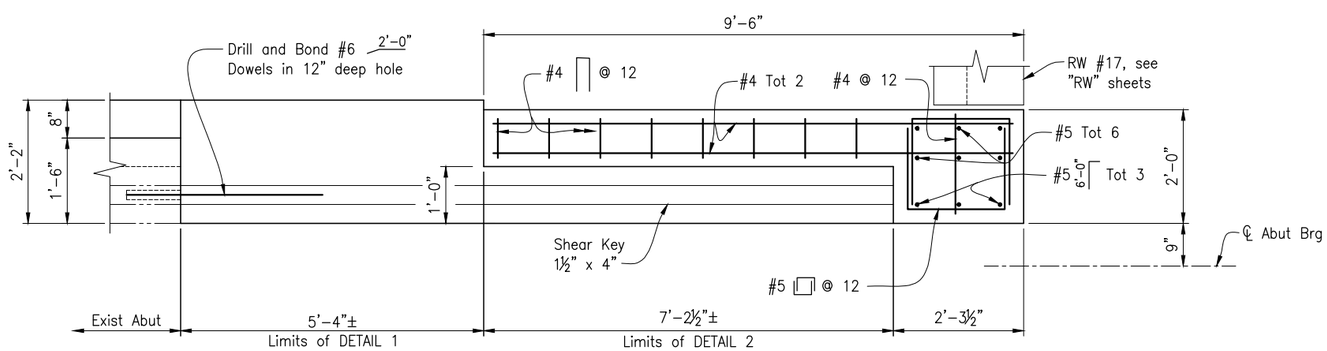

SECTION H-H
3/4"=1'-0"

NOTE:
THE CONTRACTOR SHALL VERIFY ALL CONTROLLING FIELD DIMENSIONS BEFORE ORDERING OR FABRICATING ANY MATERIAL.

100% SUBMITTAL NOT FOR CONSTRUCTION

B-30

REGISTERED PROFESSIONAL ENGINEER CAMERON PINKERTON No. 81-22 CIVIL STATE OF CALIFORNIA — REGISTERED ENGINEER – CIVIL

TRC Engineers or its officers or agents shall not be responsible for the accuracy or completeness of electronic copies of this plan sheet

CITY OF SANTA CRUZ

PREPARED FOR THE CITY OF SANTA CRUZ PUBLIC WORKS DEPARTMENT

DESIGN	BY C. PINKERTON	CHECKED W. CULLUMBER
DETAILS	BY G. IMBSEN	CHECKED W. CULLUMBER
QUANTITIES	BY C. PINKERTON	CHECKED

ORIGINAL SCALE IN INCHES FOR REDUCED PLANS 0 1 2 3

TRC
MARK IMBRIANI
PROJECT MANAGER

BRIDGE NO. 36C0108
CONTRACT NO.
EA NO.

MURRAY STREET BRIDGE
SEISMIC RETROFIT AND BARRIER REPLACEMENT
ABUTMENT 10 DETAILS NO. 1

DISREGARD PRINTS BEARING EARLIER REVISION DATES — REVISION DATES (PRELIMINARY STAGE ONLY) 09-13-13 07-01-15 07-23-21

SCALE AS SHOWN
SHEET 142 OF 167
VAULT NO. XXXXXXX

Drawing name: H:\1161 – Santa Cruz\Murray Street Bridge Seismic Retrofit\030-Abut 10 Details.dwg Layout Tab: Layout1 Oct 08,2021 – 9:45am gimbsen

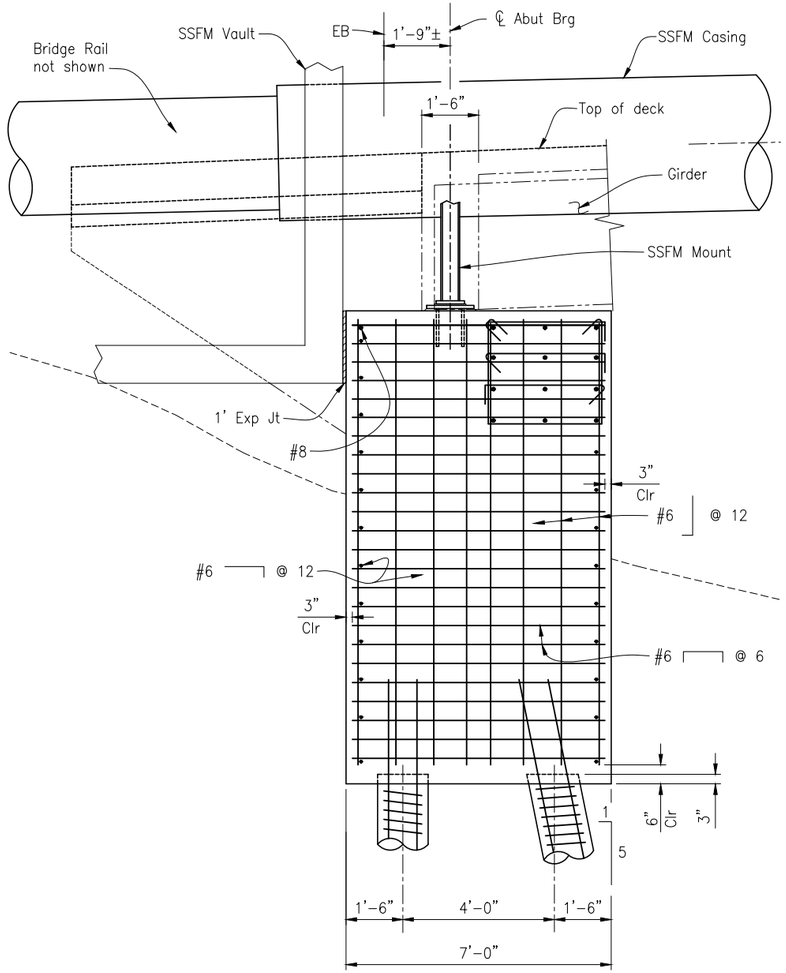

SECTION J-J

1/2"=1'-0"

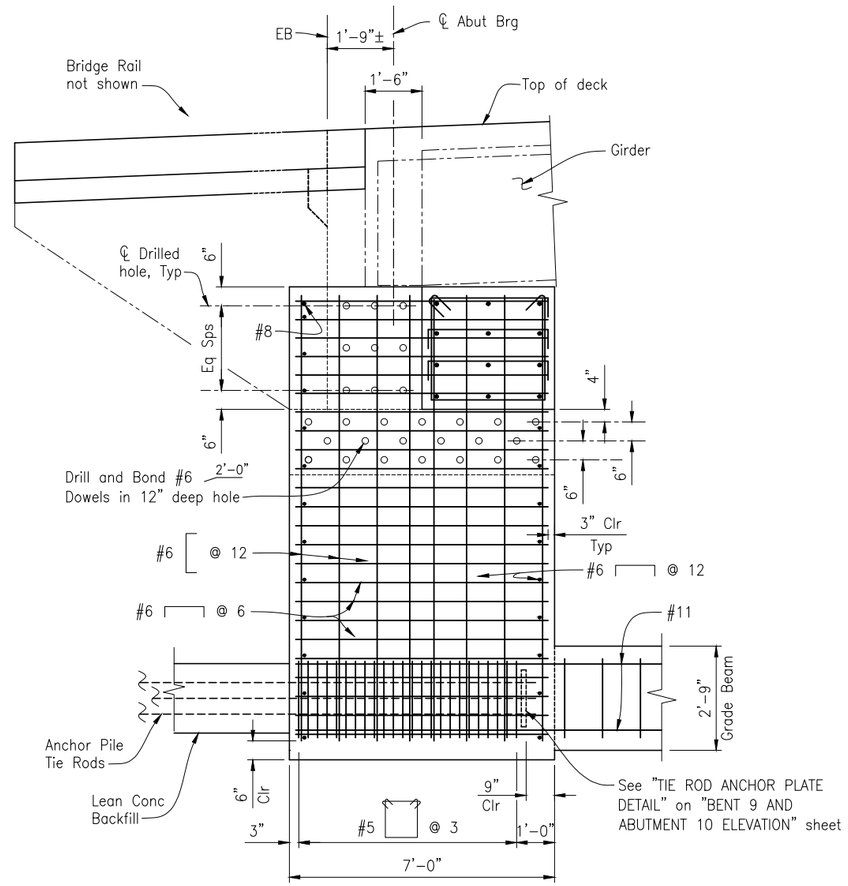

SECTION K-K

1/2"=1'-0"

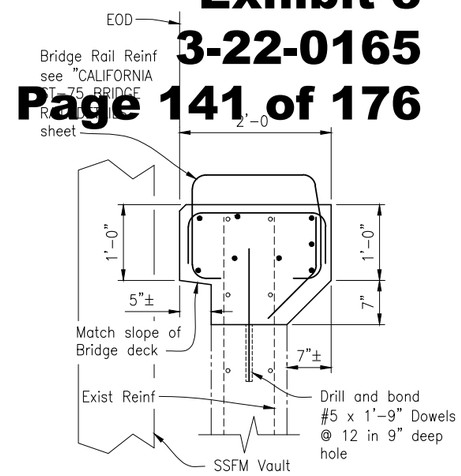

SECTION L-L

1"=1'-0"

LEGEND:

—— - - —— Indicates Existing Structure

———— Indicates New Structure

NOTE:
THE CONTRACTOR SHALL VERIFY ALL CONTROLLING FIELD DIMENSIONS BEFORE ORDERING OR FABRICATING ANY MATERIAL.

100% SUBMITTAL
NOT FOR CONSTRUCTION

B-31

REGISTERED PROFESSIONAL ENGINEER CAMERON PINKERTON No. 6 09-21-22 CIVIL STATE OF CALIFORNIA

REGISTERED ENGINEER – CIVIL

TRC Engineers or its officers or agents shall not be responsible for the accuracy or completeness of electronic copies of this plan sheet

CITY OF SANTA CRUZ

PREPARED FOR THE
CITY OF SANTA CRUZ
PUBLIC WORKS DEPARTMENT

	BY	CHECKED
DESIGN	C. PINKERTON	W. CULLUMBER
DETAILS	G. IMBSEN	W. CULLUMBER
QUANTITIES	C. PINKERTON	

ORIGINAL SCALE IN INCHES FOR REDUCED PLANS 0 1 2 3

TRC
MARK IMBRIANI
PROJECT MANAGER

BRIDGE NO. 36C0108
CONTRACT NO.
EA NO.

MURRAY STREET BRIDGE
SEISMIC RETROFIT AND BARRIER REPLACEMENT
ABUTMENT 10 DETAILS NO. 2

DISREGARD PRINTS BEARING EARLIER REVISION DATES → 09-13-13 07-23-21

REVISION DATES (PRELIMINARY STAGE ONLY)

SCALE AS SHOWN
SHEET 143 OF 167
VAULT NO. XXXXXXX

Drawing name: H:\1161 – Santa Cruz\Murray Street Bridge Seismic Retrofit\031-Abut 10 Details-02.dwg Layout Tab: Layout1 Aug 27,2021 – 2:46pm ACardoza

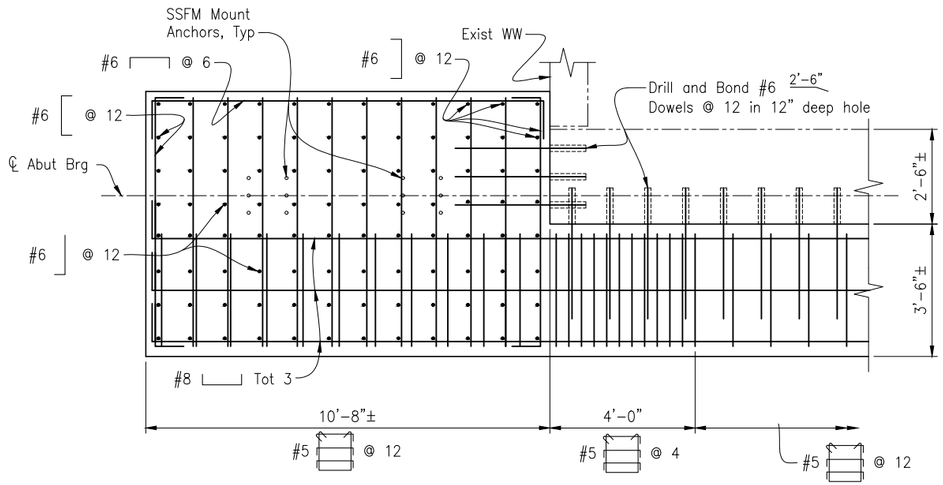

SECTION M-M
1/2"=1'-0"

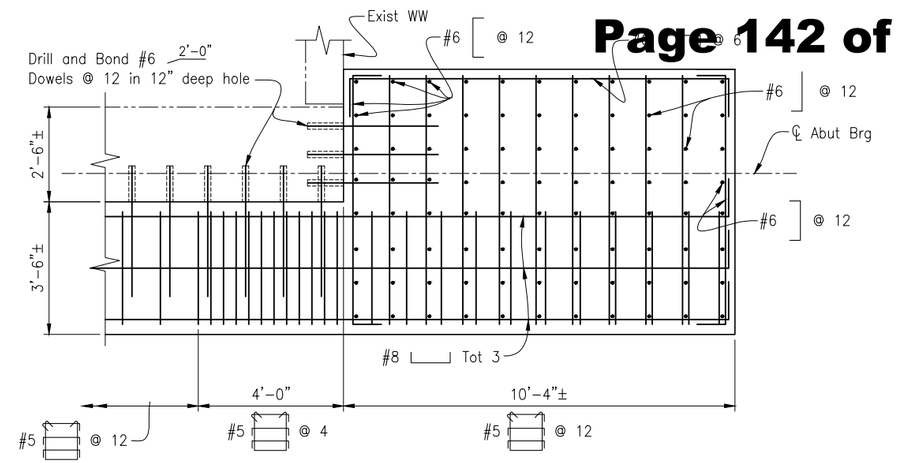

SECTION N-N
1/2"=1'-0"

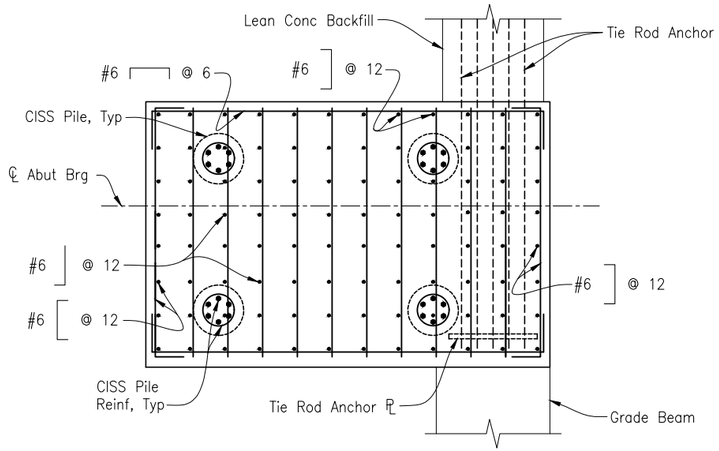

SECTION P-P
1/2"=1'-0"

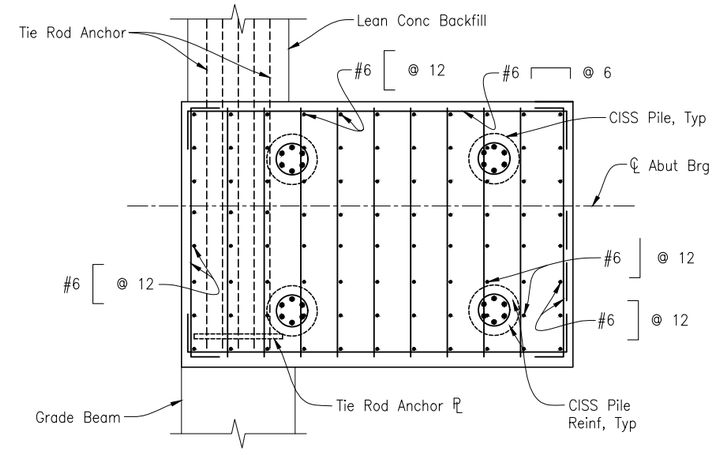

SECTION Q-Q
1/2"=1'-0"

LEGEND:
- Indicates Existing Structure
- Indicates New Structure

NOTE:
THE CONTRACTOR SHALL VERIFY ALL CONTROLLING FIELD DIMENSIONS BEFORE ORDERING OR FABRICATING ANY MATERIAL.

100% SUBMITTAL
NOT FOR CONSTRUCTION

B-32

REGISTERED PROFESSIONAL ENGINEER CAMERON PINKERTON No. 36C0108 Exp. 3-31-22 CIVIL STATE OF CALIFORNIA

REGISTERED ENGINEER – CIVIL

TRC Engineers or its officers or agents shall not be responsible for the accuracy or completeness of electronic copies of this plan sheet

CITY OF SANTA CRUZ

PREPARED FOR THE
CITY OF SANTA CRUZ
PUBLIC WORKS DEPARTMENT

DESIGN	BY C. PINKERTON	CHECKED W. CULLUMBER
DETAILS	BY G. IMBSEN	CHECKED W. CULLUMBER
QUANTITIES	BY C. PINKERTON	CHECKED

ORIGINAL SCALE IN INCHES FOR REDUCED PLANS 0 1 2 3

TRC
MARK IMBRIANI
PROJECT MANAGER

BRIDGE NO. 36C0108
CONTRACT NO.
EA NO.

MURRAY STREET BRIDGE
SEISMIC RETROFIT AND BARRIER REPLACEMENT
ABUTMENT 10 DETAILS NO. 3

DISREGARD PRINTS BEARING EARLIER REVISION DATES → 08-03-21
REVISION DATES (PRELIMINARY STAGE ONLY)

SCALE AS SHOWN
SHEET 144 OF 167
VAULT NO. XXXXXXX

Drawing name: H:\1161 – Santa Cruz\Murray Street Bridge Seismic Retrofit\032-Abut 10 Details-03.dwg Layout Tab: Layout1 Aug 27,2021 – 2:47pm ACardoza

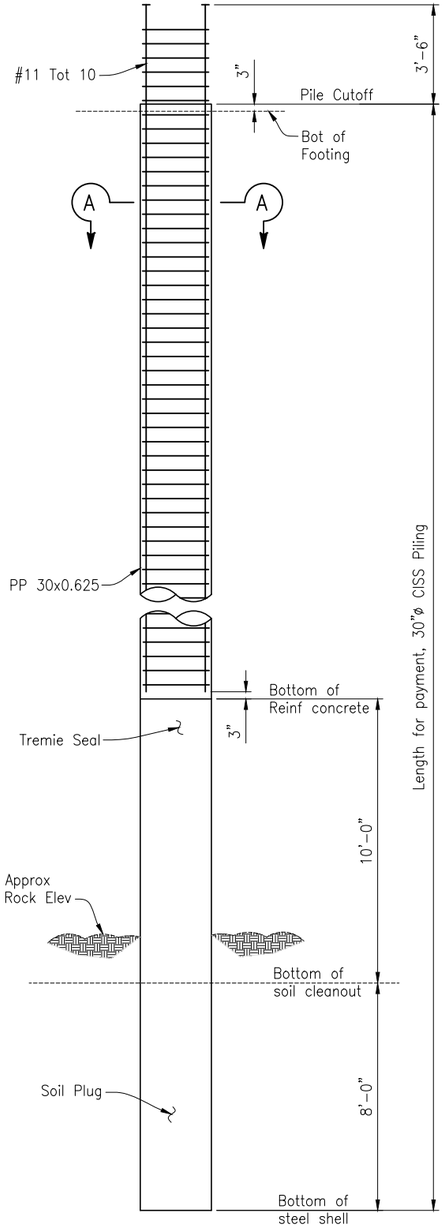

30"Ø CISS PILING

3/8"=1'-0"

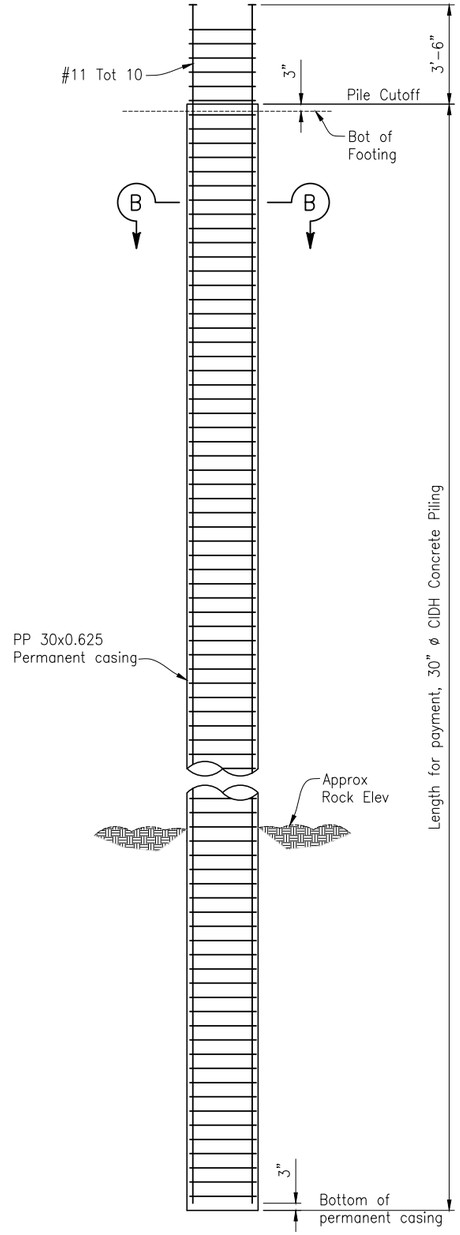

30"Ø CIDH PILING

3/8"=1'-0"

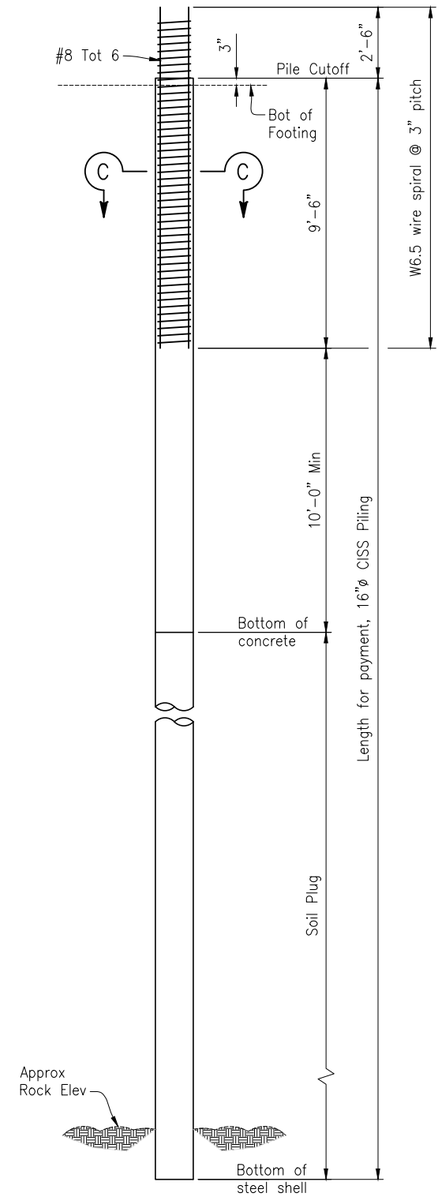

16"Ø CISS PILING

3/8"=1'-0"

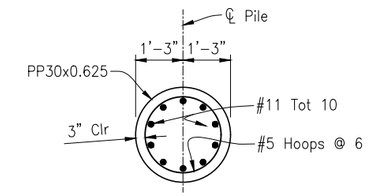

SECTION A-A

1/2"=1'-0"

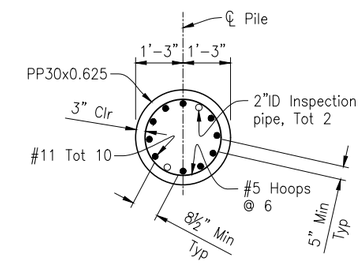

SECTION B-B

1/2"=1'-0"

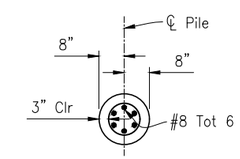

SECTION C-C

1/2"=1'-0"

NOTE:
THE CONTRACTOR SHALL VERIFY ALL CONTROLLING FIELD DIMENSIONS BEFORE ORDERING OR FABRICATING ANY MATERIAL.

100% SUBMITTAL
NOT FOR CONSTRUCTION

Drawing name: H:\1161 - Santa Cruz\Murray Street Bridge Seismic Retrofit\033-Pile-Det.dwg Layout Tab: Layout1 Aug 27,2021 - 2:47pm ACardoza

REGISTERED PROFESSIONAL ENGINEER CAMERON PINKERTON No. C 61931 CIVIL STATE OF CALIFORNIA
REGISTERED ENGINEER – CIVIL
TRC Engineers or its officers or agents shall not be responsible for the accuracy or completeness of electronic copies of this plan sheet

CITY OF SANTA CRUZ
PREPARED FOR THE
CITY OF SANTA CRUZ
PUBLIC WORKS DEPARTMENT

DESIGN	BY C. PINKERTON	CHECKED W. CULLUMBER	
DETAILS	BY A. CARDOZA	CHECKED W. CULLUMBER	
QUANTITIES	BY C. PINKERTON	CHECKED	
ORIGINAL SCALE IN INCHES FOR REDUCED PLANS	0 1 2 3		

TRC
MARK IMBRIANI
PROJECT MANAGER

BRIDGE NO. 36C0108
CONTRACT NO.
EA NO.

MURRAY STREET BRIDGE
SEISMIC RETROFIT AND BARRIER REPLACEMENT
PILE DETAILS

DISREGARD PRINTS BEARING EARLIER REVISION DATES
REVISION DATES (PRELIMINARY STAGE ONLY) 05-28-13 09-13-13 07-01-15

SCALE AS SHOWN
SHEET 145 OF 167
VAULT NO. XXXXXXX

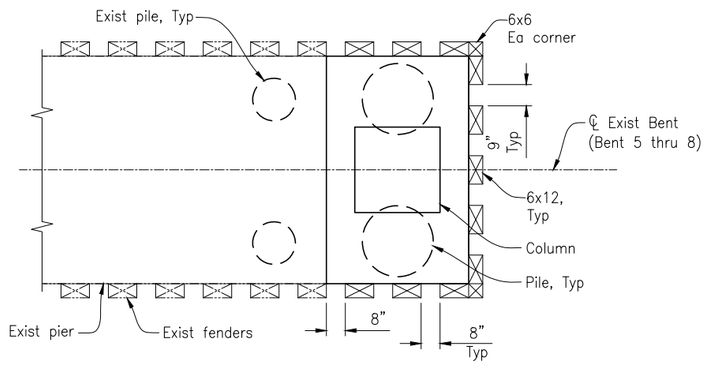

PLAN
3/8"=1'-0"

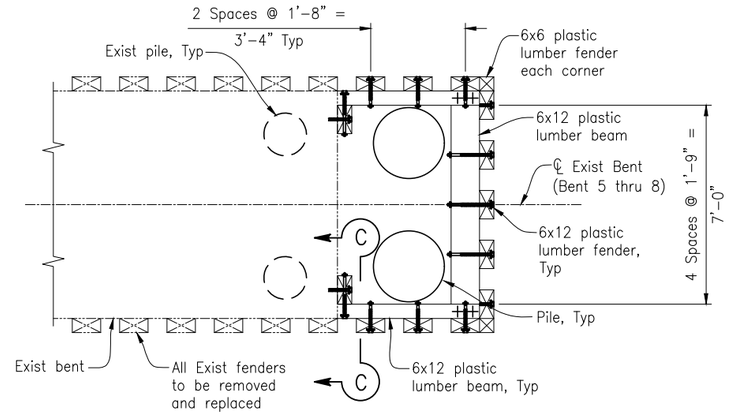

SECTION A-A
3/8"=1'-0"

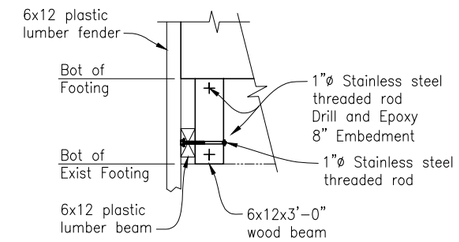

SECTION C-C
3/8"=1'-0"

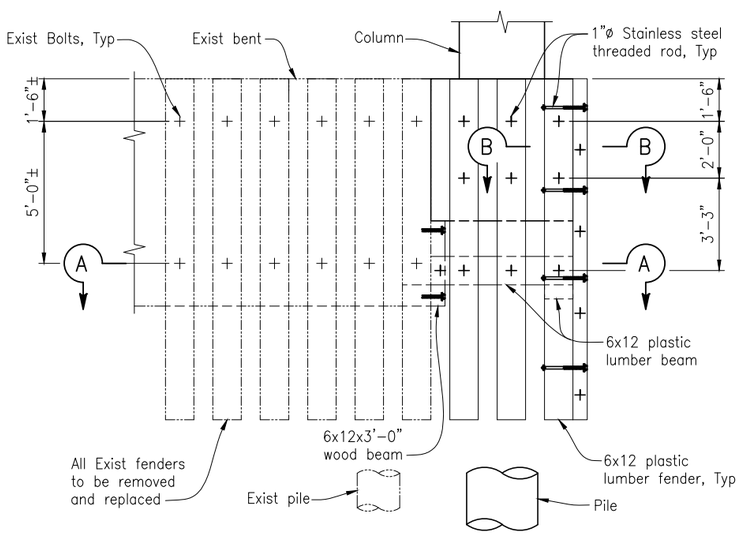

ELEVATION
3/8"=1'-0"

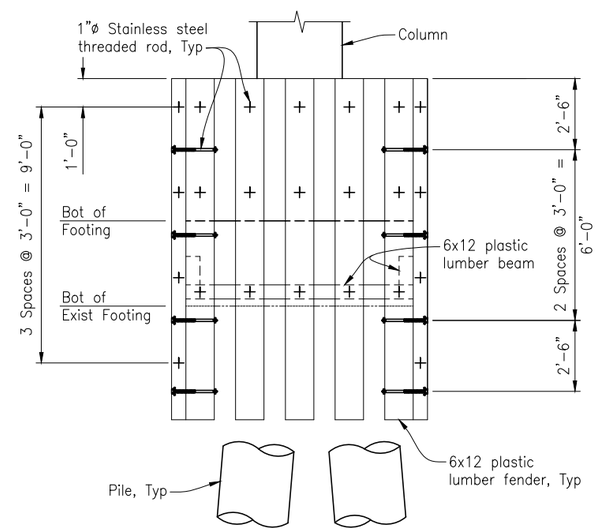

SIDE VIEW
3/8"=1'-0"

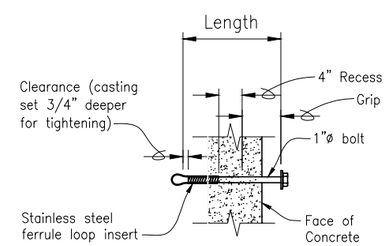

ANCHOR DETAIL
1"=1'-0"

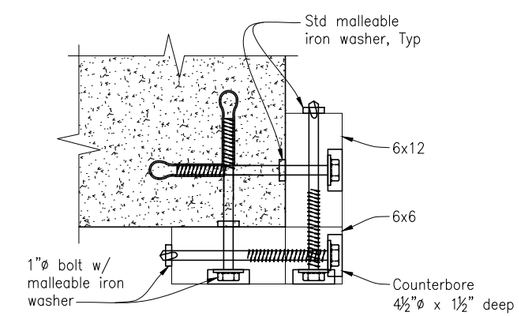

SECTION B-B
1-1/2"=1'-0"

NOTE:
THE CONTRACTOR SHALL VERIFY ALL CONTROLLING FIELD DIMENSIONS BEFORE ORDERING OR FABRICATING ANY MATERIAL.

100% SUBMITTAL
NOT FOR CONSTRUCTION

B-34

REGISTERED PROFESSIONAL ENGINEER — CAMERON PINKERTON — No. 81-22 — CIVIL — STATE OF CALIFORNIA — DRAFT

REGISTERED ENGINEER – CIVIL

TRC Engineers or its officers or agents shall not be responsible for the accuracy or completeness of electronic copies of this plan sheet

CITY OF SANTA CRUZ

PREPARED FOR THE
CITY OF SANTA CRUZ
PUBLIC WORKS DEPARTMENT

	BY	CHECKED
DESIGN	C. PINKERTON	W. CULLUMBER
DETAILS	A. CARDOZA	W. CULLUMBER
QUANTITIES	C. PINKERTON	

ORIGINAL SCALE IN INCHES FOR REDUCED PLANS 0 1 2 3

TRC
MARK IMBRIANI
PROJECT MANAGER

BRIDGE NO. 36C0108
CONTRACT NO.
EA NO.

MURRAY STREET BRIDGE
SEISMIC RETROFIT AND BARRIER REPLACEMENT
FENDER DETAILS

DISREGARD PRINTS BEARING EARLIER REVISION DATES — REVISION DATES (PRELIMINARY STAGE ONLY) 09-13-13 07-01-15 07-28-21

SCALE AS SHOWN
SHEET 146 OF 167
VAULT NO. XXXXXXX

Drawing name: H:\1161 – Santa Cruz\Murray Street Bridge Seismic Retrofit\034-Fender-Det.dwg Layout Tab: Layout1 Aug 27,2021 – 2:48pm ACardoza

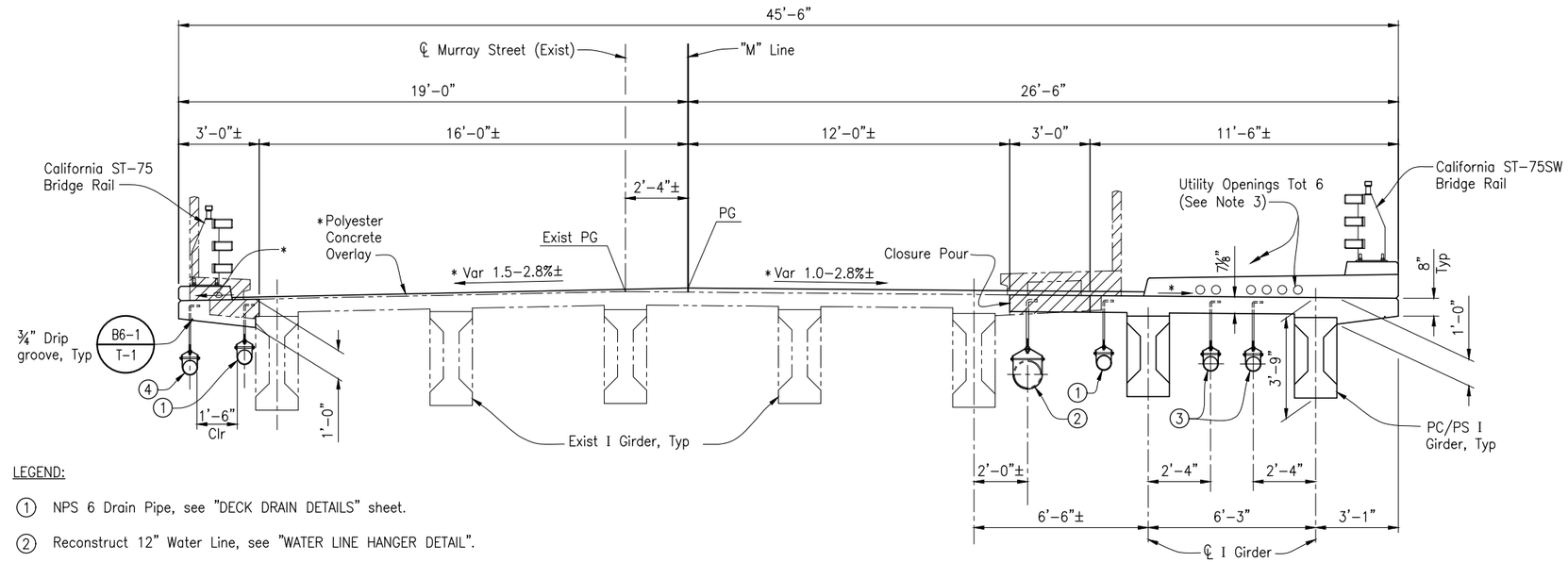

LEGEND:

1. NPS 6 Drain Pipe, see "DECK DRAIN DETAILS" sheet.
2. Reconstruct 12" Water Line, see "WATER LINE HANGER DETAIL".
3. NPS 6 Electrical Casing, see "ELECTRICAL HANGER DETAIL".
4. NPS 6 Casing and 4"ø Gas Line (by others), see "GAS LINE HANGER DETAIL".

*For overlay, profile grade and cross slope, see "POLYESTER CONCRETE OVERLAY DETAILS" sheet

TYPICAL SECTION

3/8"=1'-0"

UTILITY DATA TABLE

TYPE	CASING SIZE (ø)	CASING MATERIAL	UTILITY PIPE SIZE (ø)	UTILITY PIPE MATERIAL	OWNER
Water Line	N/A	N/A	12'	Steel	City
Electrical	NPS 6	Steel	N/A	N/A	PG&E
Gas Line	NPS 6	Steel	4"	Steel	PG&E

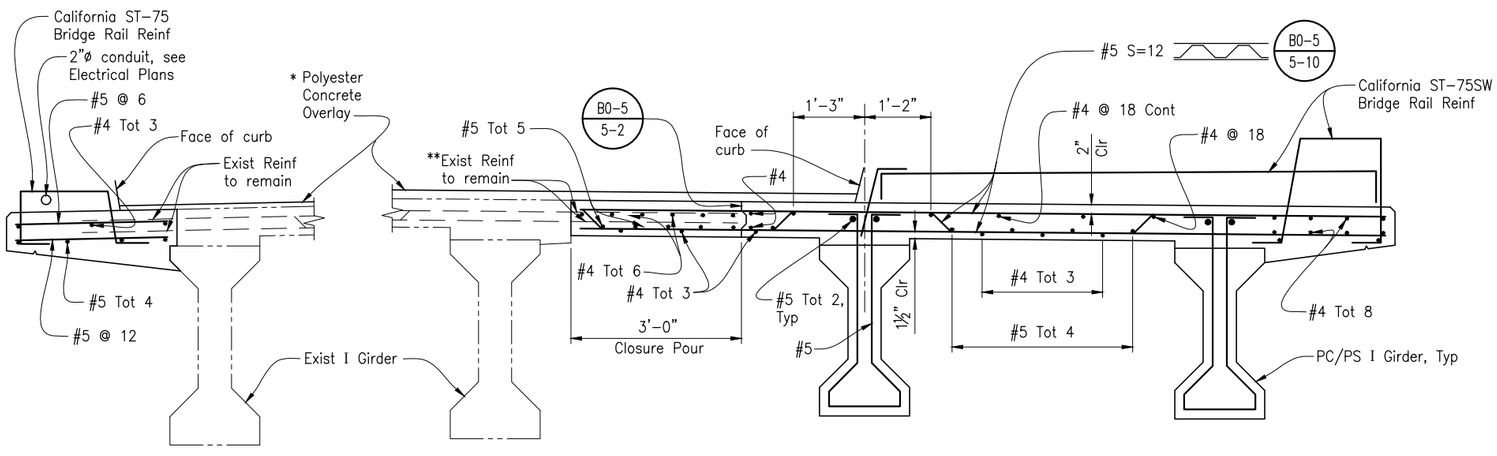

**Bend and trim exist bars, lap with #5 bars

PART TYPICAL SECTION

3/4"=1'-0"

NOTE:
THE CONTRACTOR SHALL VERIFY ALL CONTROLLING FIELD DIMENSIONS BEFORE ORDERING OR FABRICATING ANY MATERIAL.

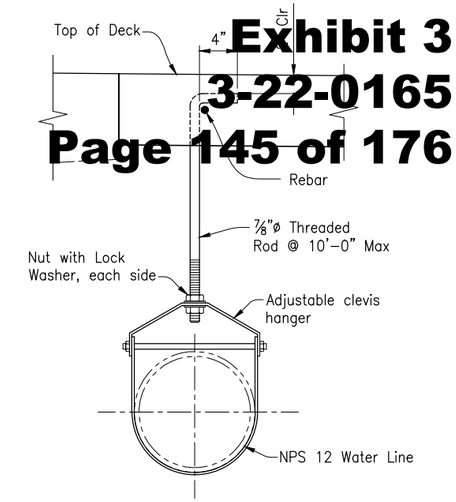

WATER LINE HANGER DETAIL

NTS

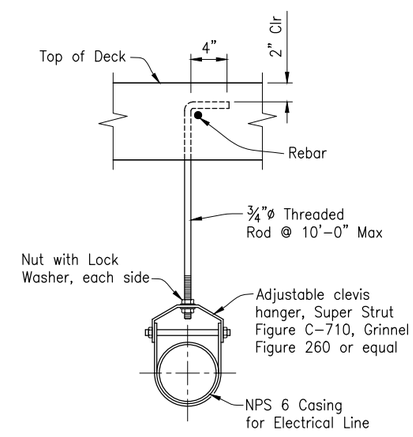

ELECTRICAL HANGER DETAIL

NTS

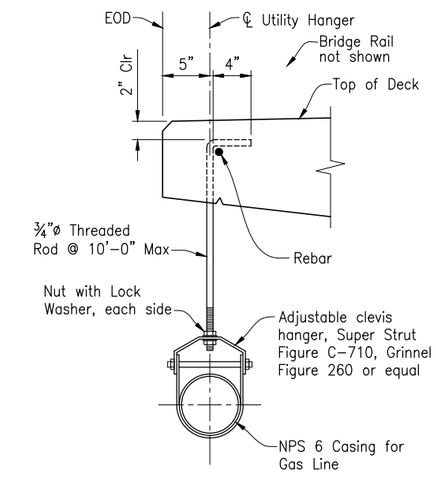

GAS LINE HANGER DETAIL

NTS

LEGEND:

- Indicates Existing Structure
- Indicates New Structure
- Indicates Bridge Removal (Portion)

NOTES:

1. Fill existing deck drains with mortar.
2. Stay-in-place forms not allowed.
3. One opening to be used by Comcast, other five are for future utilities.
4. For Bridge Rail details, see "CALIFORNIA ST-75 BRIDGE RAIL DETAIL" sheets and "CALIFORNIA ST-75SW BRIDGE RAIL DETAIL" sheets.
5. Place sidewalk and utilities minimum 15 days after closure pour.

100% SUBMITTAL NOT FOR CONSTRUCTION

B-35

REGISTERED PROFESSIONAL ENGINEER CAMERON PINKERTON No. 81122 CIVIL STATE OF CALIFORNIA — DRAFT

REGISTERED ENGINEER – CIVIL

TRC Engineers or its officers or agents shall not be responsible for the accuracy or completeness of electronic copies of this plan sheet

CITY OF SANTA CRUZ

PREPARED FOR THE CITY OF SANTA CRUZ PUBLIC WORKS DEPARTMENT

DESIGN	BY C. PINKERTON	CHECKED W. CULLUMBER	
DETAILS	BY G. IMBSEN	CHECKED W. CULLUMBER	
QUANTITIES	BY C. PINKERTON	CHECKED	
ORIGINAL SCALE IN INCHES FOR REDUCED PLANS	0 1 2 3		

TRC
MARK IMBRIANI
PROJECT MANAGER

BRIDGE NO. 36C0108
CONTRACT NO.
EA NO.

MURRAY STREET BRIDGE SEISMIC RETROFIT AND BARRIER REPLACEMENT

TYPICAL SECTION

DISREGARD PRINTS BEARING EARLIER REVISION DATES → 03-22-11 | 09-13-13 | 07-01-15 | 07-23-21

REVISION DATES (PRELIMINARY STAGE ONLY)

SCALE AS SHOWN
SHEET 147 OF 167
VAULT NO. XXXXXXX

Drawing name: H:\1161 – Santa Cruz\Murray Street Bridge Seismic Retrofit\035-TYP SEC.dwg Layout Tab: Layout1 Oct 08,2021 – 9:59am gimbsen

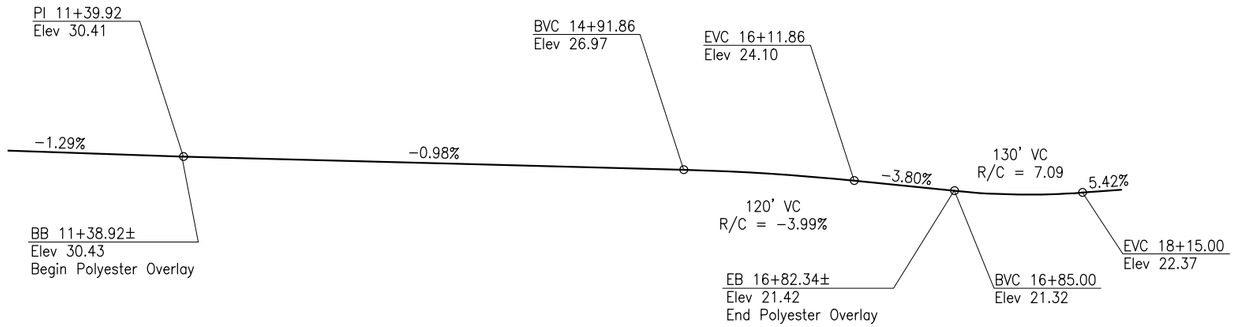

PROFILE GRADE

NTS

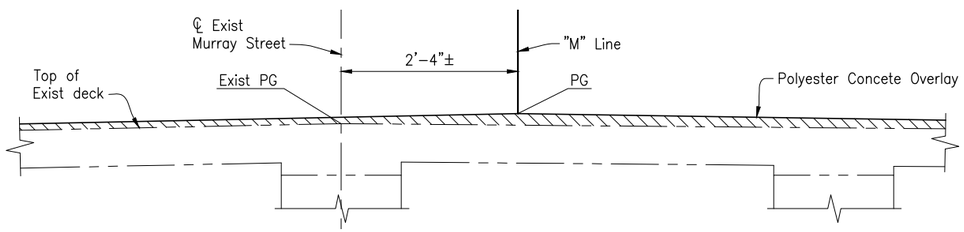

PARTIAL CROSS SECTION

NTS

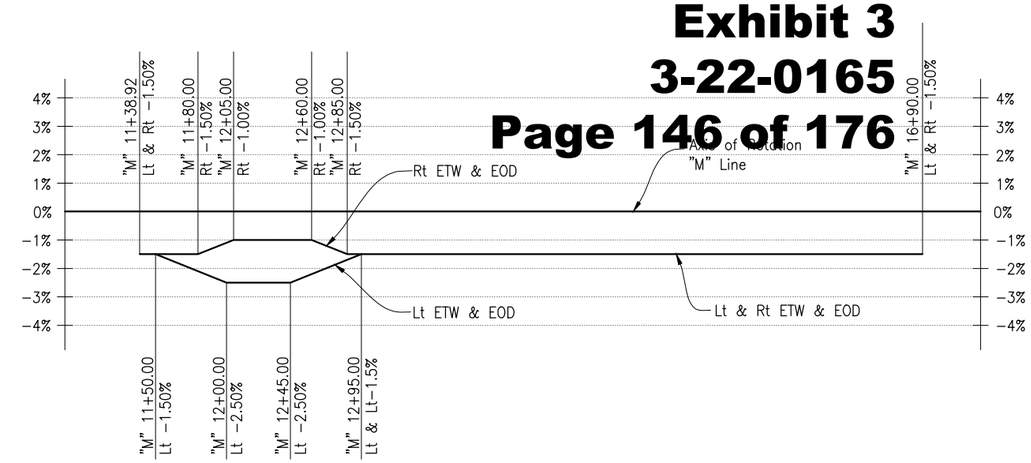

SUPERELEVATION DIAGRAM

NTS

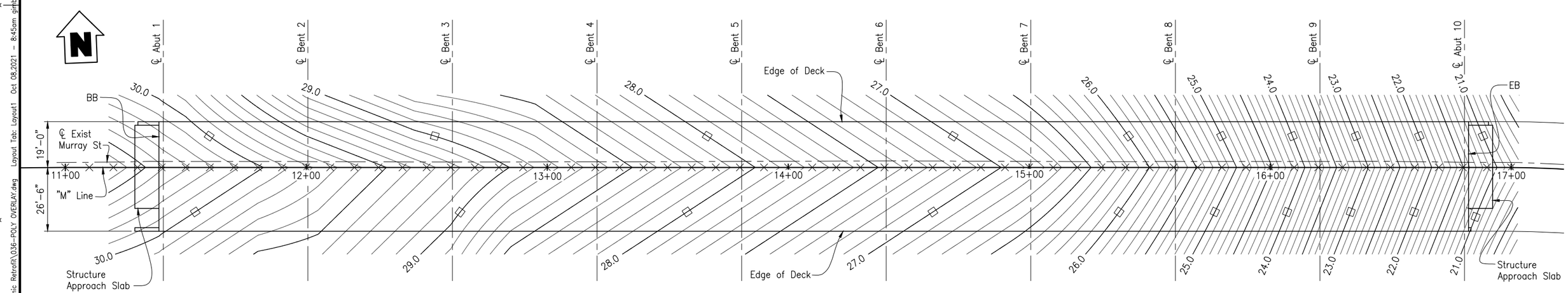

DECK CONTOURS

1"=20'-0"

NOTES:

1. Contours indicate elevations on top of polyester concrete overlay or top of approach slab.

× Denotes 10' intervals along station line

□ Indicates even foot contours.
Contour intervals = 0.1'
Contours do not include Camber.

NOTE:
THE CONTRACTOR SHALL VERIFY ALL CONTROLLING FIELD DIMENSIONS BEFORE ORDERING OR FABRICATING ANY MATERIAL.

100% SUBMITTAL NOT FOR CONSTRUCTION

B-36

REGISTERED PROFESSIONAL ENGINEER CAMERON PINKERTON No. 81-22 CIVIL STATE OF CALIFORNIA

REGISTERED ENGINEER – CIVIL

TRC Engineers or its officers or agents shall not be responsible for the accuracy or completeness of electronic copies of this plan sheet

CITY OF SANTA CRUZ

PREPARED FOR THE
CITY OF SANTA CRUZ
PUBLIC WORKS DEPARTMENT

DESIGN	BY C. PINKERTON	CHECKED W. CULLUMBSER
DETAILS	BY G. IMBSEN	CHECKED W. CULLUMBER
QUANTITIES	BY C. PINKERTON	CHECKED

ORIGINAL SCALE IN INCHES FOR REDUCED PLANS 0 1 2 3

TRC
MARK IMBRIANI
PROJECT MANAGER

BRIDGE NO. 36C0108
CONTRACT NO.
EA NO.

MURRAY STREET BRIDGE
SEISMIC RETROFIT AND BARRIER REPLACEMENT
POLYESTER CONCRETE OVERLAY DETAILS

DISREGARD PRINTS BEARING EARLIER REVISION DATES → 08-18-13 07-01-15 07-23-21
REVISION DATES (PRELIMINARY STAGE ONLY)

SCALE AS SHOWN
SHEET 148 OF 167
VAULT NO. XXXXXXX

Drawing name: H:\1161 – Santa Cruz\Murray Street Bridge Seismic Retrofit\036-POLY OVERLAY.dwg Layout Tab: Layout1 Oct 08,2021 – 8:45am gilbsen

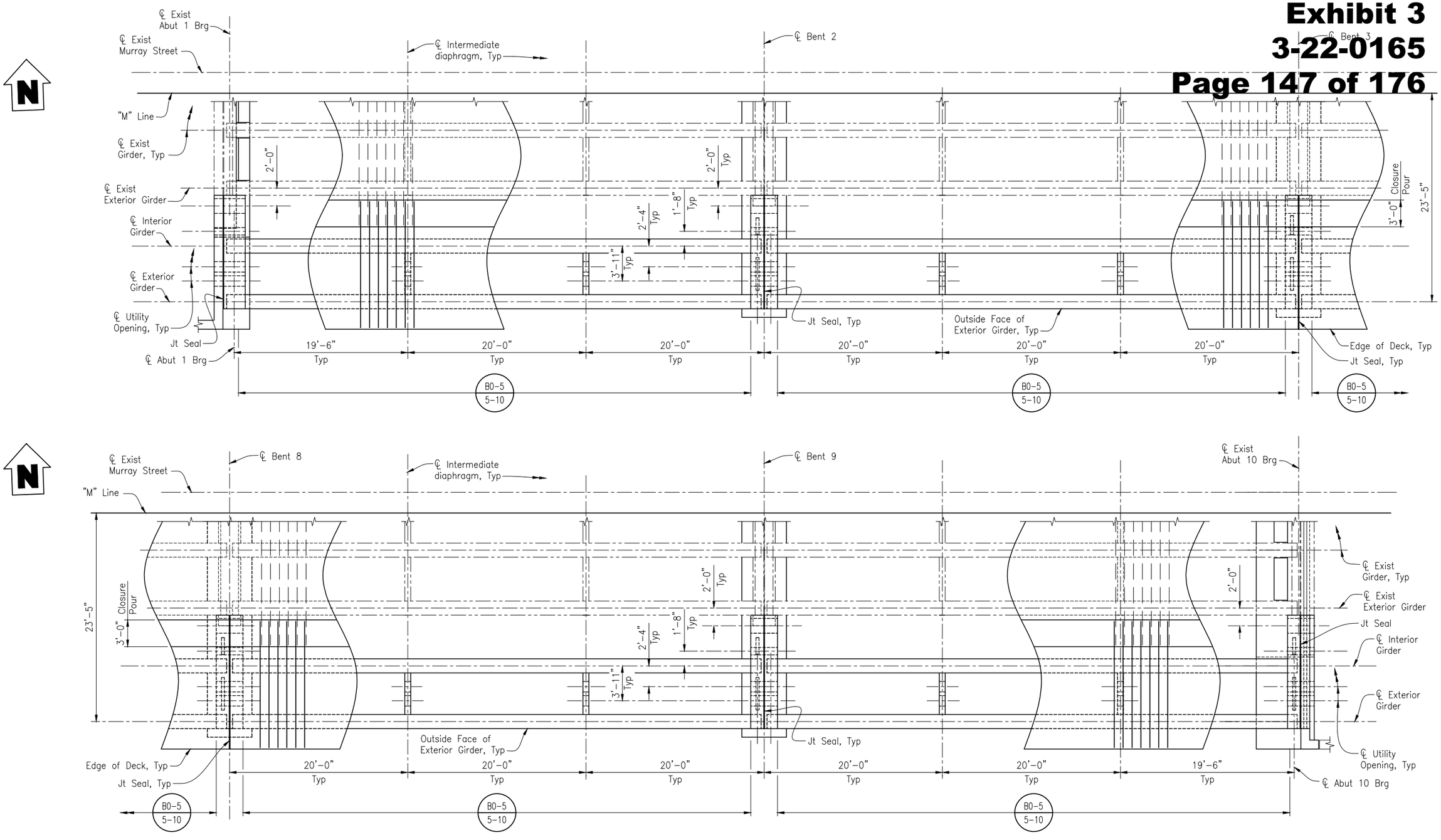

Spans 1, 2, 8 & 9 shown, others similar

GIRDER LAYOUT

3/16"=1'-0"

NOTE:
THE CONTRACTOR SHALL VERIFY ALL CONTROLLING FIELD DIMENSIONS BEFORE ORDERING OR FABRICATING ANY MATERIAL.

NOTE:

1. For locations of fixed (F) and expansion (E) bearings, see "GENERAL PLAN" sheet.

100% SUBMITTAL
NOT FOR CONSTRUCTION

B-37

REGISTERED PROFESSIONAL ENGINEER CAMERON PINKERTON No. 86-31-22 CIVIL STATE OF CALIFORNIA
REGISTERED ENGINEER – CIVIL
TRC Engineers or its officers or agents shall not be responsible for the accuracy or completeness of electronic copies of this plan sheet

CITY OF SANTA CRUZ
PREPARED FOR THE
CITY OF SANTA CRUZ
PUBLIC WORKS DEPARTMENT

DESIGN	BY C. PINKERTON	CHECKED W. CULLUMBER
DETAILS	BY G. IMBSEN	CHECKED W. CULLUMBER
QUANTITIES	BY C. PINKERTON	CHECKED

ORIGINAL SCALE IN INCHES FOR REDUCED PLANS 0 1 2 3

TRC
MARK IMBRIANI
PROJECT MANAGER

BRIDGE NO. 36C0108
CONTRACT NO.
EA NO.

MURRAY STREET BRIDGE
SEISMIC RETROFIT AND BARRIER REPLACEMENT
GIRDER LAYOUT

DISREGARD PRINTS BEARING EARLIER REVISION DATES
REVISION DATES (PRELIMINARY STAGE ONLY) 09-13-13 07-01-15 08-09-21

SCALE AS SHOWN
SHEET 149 OF 167
VAULT NO. XXXXXXX

Drawing name: H:\1161 – Santa Cruz\Murray Street Bridge Seismic Retrofit\037-Girder LO.dwg Layout Tab: Layout1 Aug 27,2021 – 2:50pm ACardoza

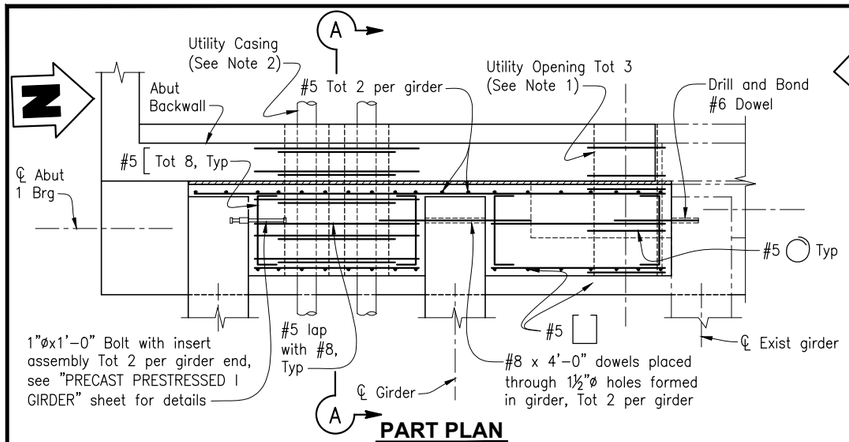

PART PLAN

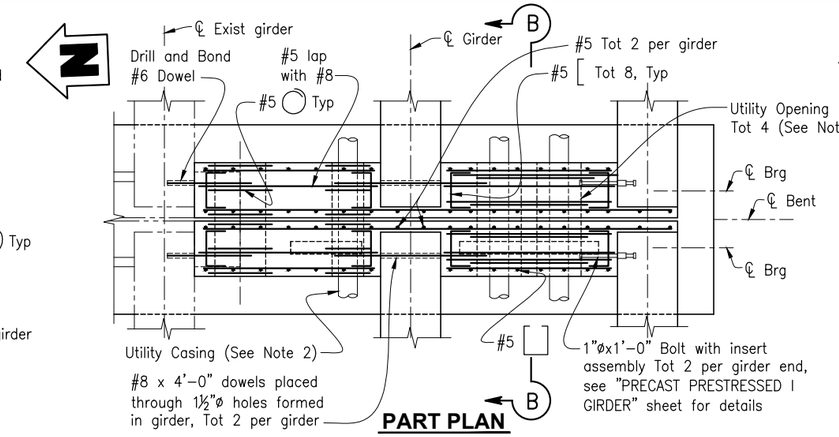

PART PLAN

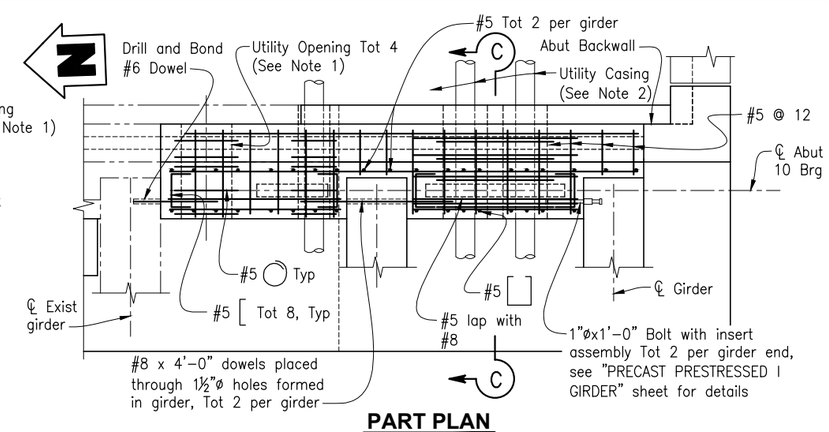

PART PLAN

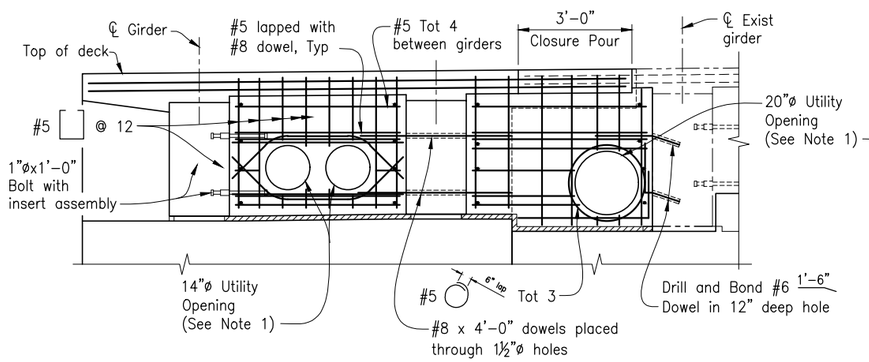

PART ELEVATION

ABUTMENT 1 END DIAPHRAGM

1/2"=1'-0"

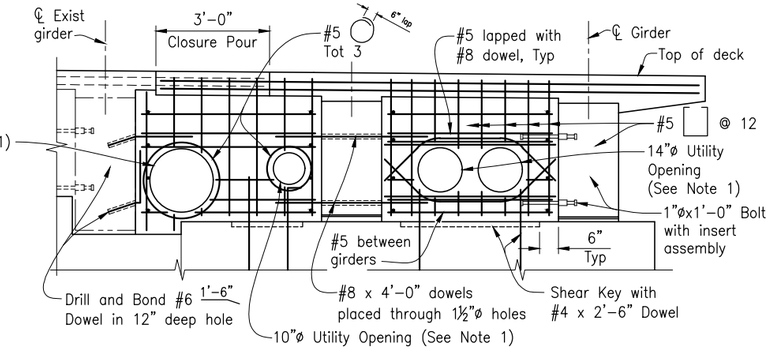

PART ELEVATION

BENT END DIAPHRAGM

1/2"=1'-0"

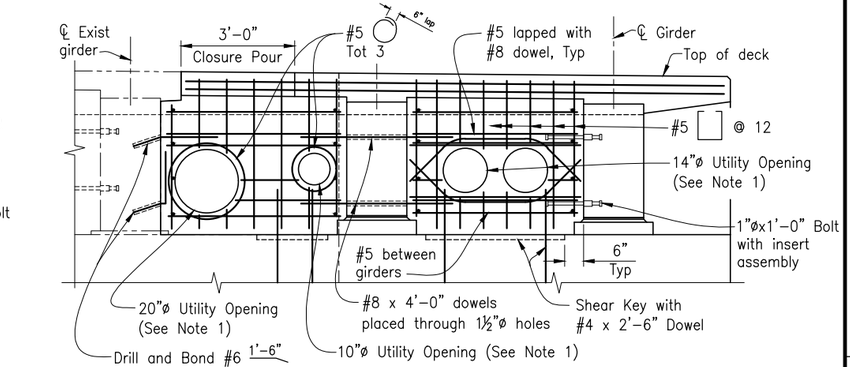

PART ELEVATION

ABUTMENT 10 END DIAPHRAGM

1/2"=1'-0"

NOTE:

1. For for utility opening details not shown, see B6-10 / U-13
2. For casing sizes, see "TYPICAL SECTION" sheet.

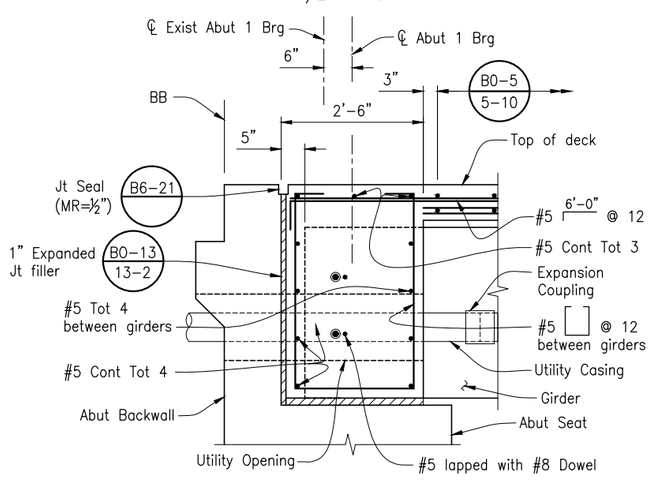

SECTION A-A

3/4"=1'-0"

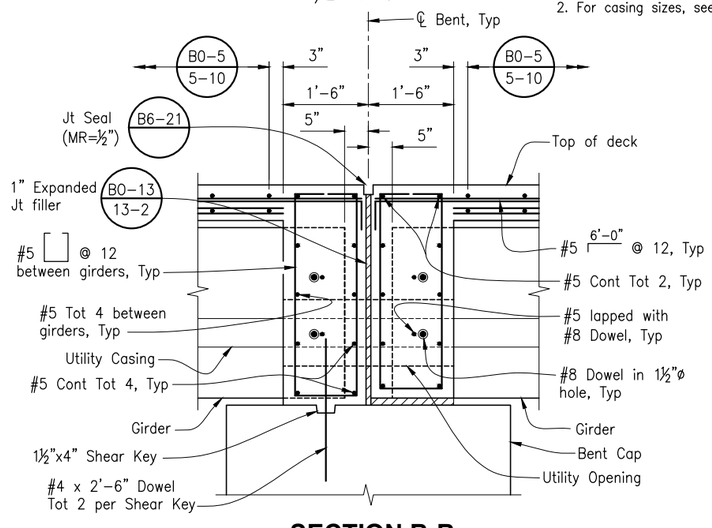

SECTION B-B

3/4"=1'-0"

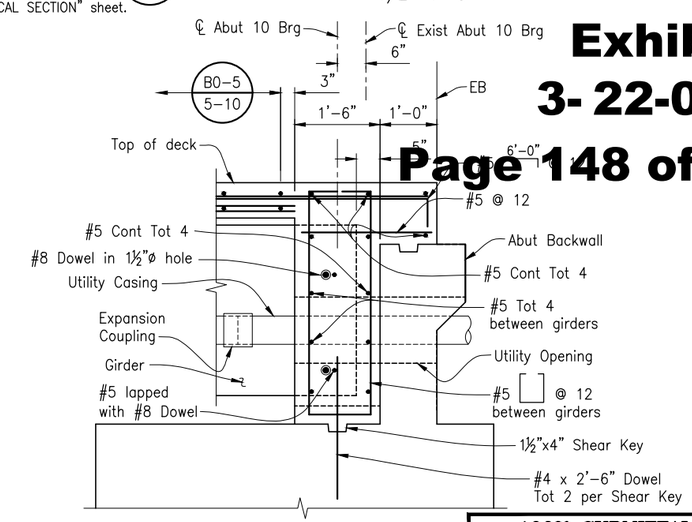

SECTION C-C

3/4"=1'-0"

Exhibit 3
3-22-0165
Page 148 of 176

NOTE:
THE CONTRACTOR SHALL VERIFY ALL CONTROLLING FIELD DIMENSIONS BEFORE ORDERING OR FABRICATING ANY MATERIAL.

100% SUBMITTAL NOT FOR CONSTRUCTION

B-38

REGISTERED PROFESSIONAL ENGINEER — CAMERON PINKERTON — No. 81-22 — CIVIL — STATE OF CALIFORNIA — DRAFT

REGISTERED ENGINEER – CIVIL

TRC Engineers or its officers or agents shall not be responsible for the accuracy or completeness of electronic copies of this plan sheet

CITY OF SANTA CRUZ

PREPARED FOR THE CITY OF SANTA CRUZ PUBLIC WORKS DEPARTMENT

	BY	CHECKED
DESIGN	C. PINKERTON	W. CULLUMBER
DETAILS	G. IMBSEN	W. CULLUMBER
QUANTITIES	C. PINKERTON	

ORIGINAL SCALE IN INCHES FOR REDUCED PLANS 0 1 2 3

TRC — MARK IMBRIANI, PROJECT MANAGER

BRIDGE NO. 36C0108
CONTRACT NO.
EA NO.

MURRAY STREET BRIDGE
SEISMIC RETROFIT AND BARRIER REPLACEMENT
END DIAPHRAGM DETAILS

DISREGARD PRINTS BEARING EARLIER REVISION DATES — REVISION DATES (PRELIMINARY STAGE ONLY): 09-13-13, 07-01-15, 07-30-21

SCALE AS SHOWN
SHEET 150 OF 167
VAULT NO. XXXXXXX

Drawing name: H:\1161 – Santa Cruz\Murray Street Bridge Seismic Retrofit\038-Girder L0-02.dwg Layout Tab: Layout1 Oct 08,2021 – 11:05am gihbsen

DIST	COUNTY	ROUTE	POST MILES TOTAL PROJECT	SHEET No.	TOTAL SHEETS
05	SCr				

REGISTERED CIVIL ENGINEER DATE

PLANS APPROVAL DATE

REGISTERED PROFESSIONAL ENGINEER CAMERON J. PINKERTON No. 73288 Exp. 12-31-22 CIVIL STATE OF CALIFORNIA

The State of California or its officers or agents shall not be responsible for the accuracy or completeness of scanned copies of this plan sheet.

The Registered Civil Engineer for the project is responsible for the selection and proper application of the component design and any modifications shown.

Exhibit 3

3- 22-0165

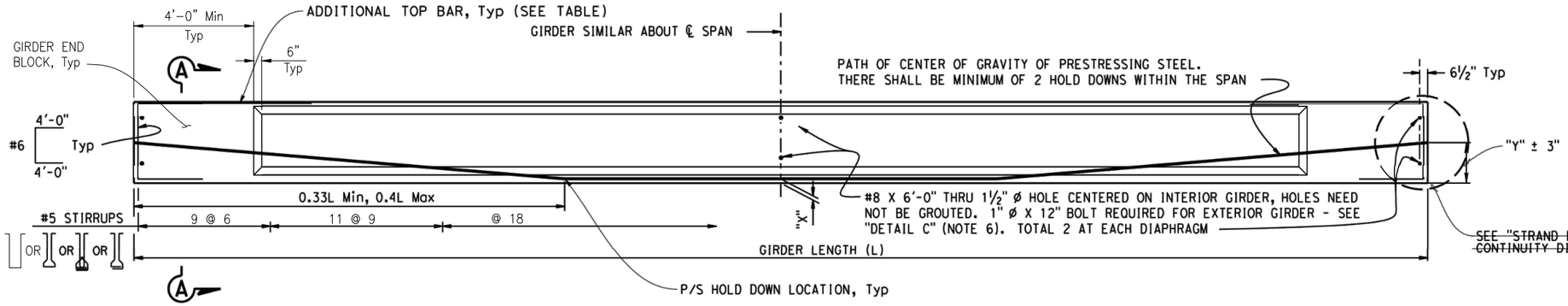

NOTE: Girder ends to be cast such that a level surface is provided at bearing pads.

(1) ELEVATION

LOCATION	GIRDER LENGTH (L)	GIRDER DEPTH (D)	"X" (in)	JACKING FORCE (P) (Kips)	As, Min (in^2) of 0.6" ø STRANDS	"Y" (in)	CONCRETE STRENGTH (ksi)		MIDSPAN DEAD LOAD DEFLECTION (ft)		ADDITIONAL TOP BAR (EACH END)
							f'_{ci}	f'_c	DECK	RAIL	
ALL GIRDERS	*	3'-0"	4	560	N/A	17	5	6	0.60	**0.06	#_x_Tot_
			6	600							
GIRDER B			4								
			6								
GIRDER *			4								
			6								

(2) *SPANS 1 & 9 59'-11", SPANS 2 THRU 8 59'-2"
**INCLUDES SIDEWALK

NOTES:

1. The Jacking Force (P) is the force required at the center of the span before all design losses. The jacking force does not include any fabrication specific losses.
2. Concrete Strength: f'_{ci} is at time of initial stressing
   f'_c is the 28-day compressive strength
3. Deflection components will be used to set screed line elevations.
4. Screed line elevations for deck concrete will be determined by the Engineer.
5. Contractor may interpolate "JACKING FORCE" and "X" values between limits shown, as approved by the Engineer.
6. For "DETAIL C", see "PC/PRETENSIONED I GIRDER (MISC DETAILS)" sheet.
7. Prestressing strand shall be 270 ksi low relaxation.

(4) ~~* ENGINEER TO FILL IN THESE VALUES, THEN DELETE THIS NOTE~~

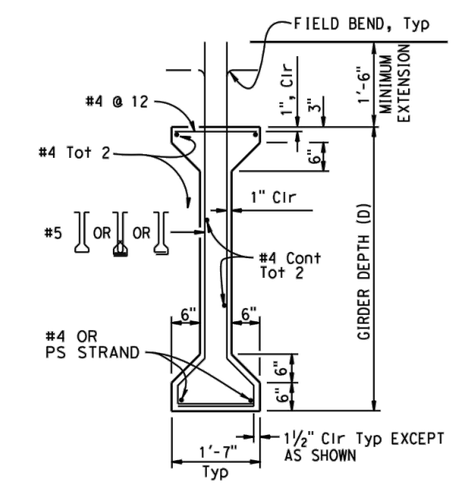

TYPICAL GIRDER SECTION

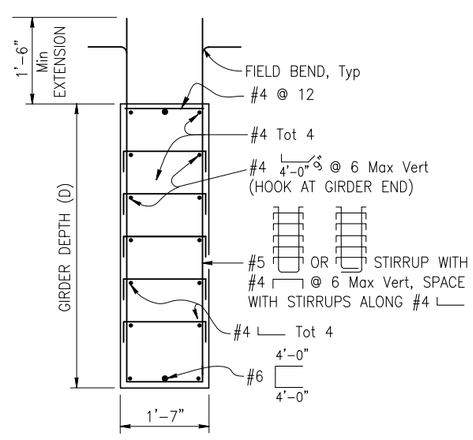

(1) SECTION A-A

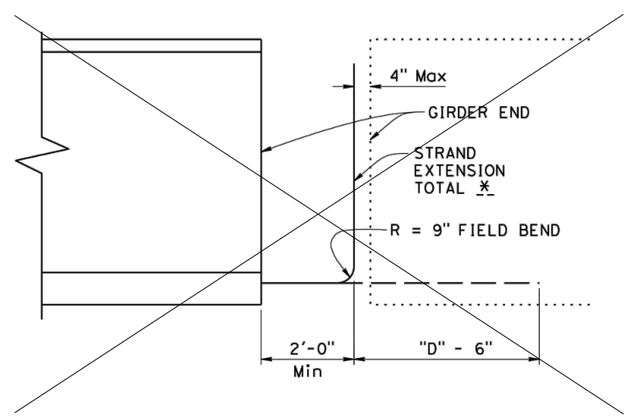

(3) STRAND EXTENSION HOOK DETAIL FOR CONTINUITY DIAPHRAGM (AT BENT)

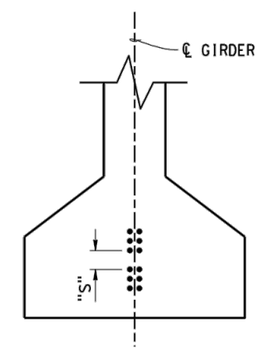

CLEARANCES FOR PRETENSIONED STRANDS

STRAND CLEARANCES NOTES:

1. Strands may be bundled in groups consisting of 3 vertically and 2 horizontally at midspan, and separated at the ends.
2. The minimum distance "S" between groups or individual strands is 1¾" for 0.5" ø strand and 2" for 0.6" ø strand.
3. "S" is measured between centers of adjacent strands.
4. Authorization of Engineer is required for deviation.

NOTE: For "WELDED WIRE REINFORCEMENT (WWR) ALTERNATIVE", see "PC/PRETENSIONED I GIRDER (MISC DETAILS)" sheet.

100% SUBMITTAL
NOT FOR CONSTRUCTION

SPECIAL DETAILS NO SCALE B-39

BRIDGE STANDARD DETAILS		
xs1-120-2 FILE NO.	July 2020 APPROVAL DATE	*The components of the Bridge Standard Details have been prepared under the responsible charge of the Technical Owner, a registered civil engineer in the State of California*

MODIFICATIONS SHOWN:
(1) REVISED DETAIL (3) REMOVED DETAIL
(2) REVISED TABLE (4) REMOVED NOTE

STATE OF CALIFORNIA DEPARTMENT OF TRANSPORTATION

DIVISION OF ENGINEERING SERVICES

BRIDGE NO. 36C0108 POST MILE

MURRAY STREET BRIDGE
SEISMIC RETROFIT AND BARRIER REPLACEMENT

PC/PRETENSIONED I GIRDER (HARPED STRANDS)

Refer to: http://www.dot.ca.gov/hq/esc/techpubs/manual/bridgemanuals/bridge-standard-detail-sheets/index.html

FILE => 202007-xs1-120-2.dgn
USERNAME => $USER TIME PLOTTED => 8:59:41 AM DATE PLOTTED => 8/2/2021

ORIGINAL SCALE IN INCHES FOR REDUCED PLANS 0 1 2 3

UNIT:
PROJECT NUMBER & PHASE:
CONTRACT NO.:

DISREGARD PRINTS BEARING EARLIER REVISION DATES

REVISION DATES: 06-12-14 01-26-20 07-15-20

SHEET 151 OF 167

DIST	COUNTY	ROUTE	POST MILES TOTAL PROJECT	SHEET No.	TOTAL SHEETS
05	SCr				

REGISTERED CIVIL ENGINEER DATE

PLANS APPROVAL DATE

REGISTERED PROFESSIONAL ENGINEER CAMERON J. PINKERTON No. 73288 Exp. 12-31-22 CIVIL STATE OF CALIFORNIA

The State of California or its officers or agents shall not be responsible for the accuracy or completeness of scanned copies of this plan sheet.

The Registered Civil Engineer for the project is responsible for the selection and proper application of the component design and any modifications shown.

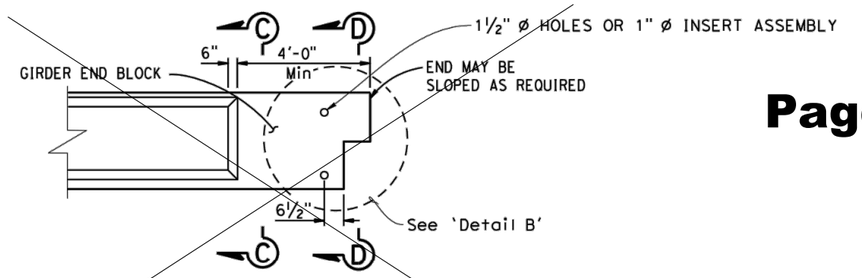

1 OPTIONAL NOTCHED END DETAIL

NOTE: Girder end block with notch shown, optional girder end block without notch similar.

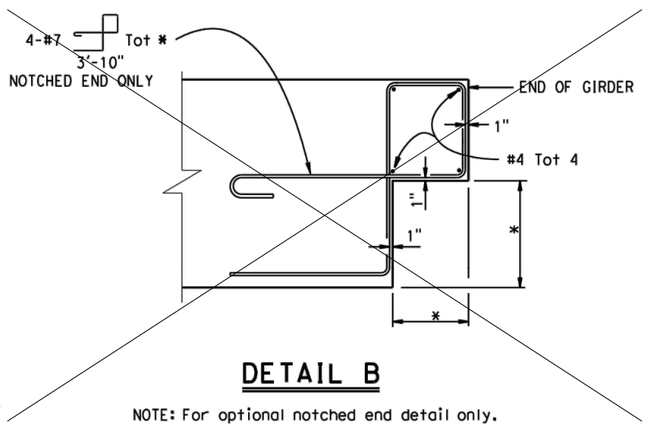

DETAIL B

1 NOTE: For optional notched end detail only.

3 ~~* ENGINEER TO FILL IN THESE VALUES, THEN DELETE THIS NOTE~~

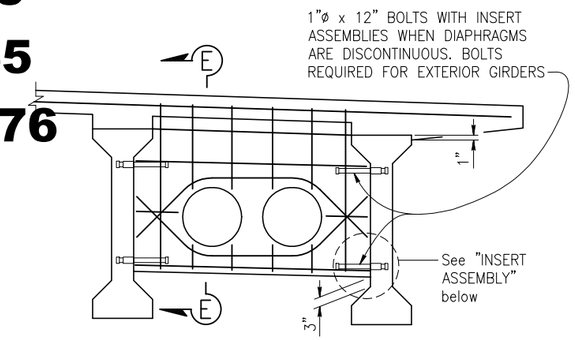

2 INTERMEDIATE DIAPHRAGM

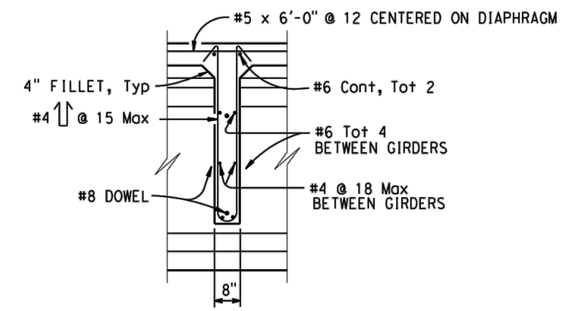

NOTE: Diaphragm may be vertical or normal to deck grade.

SECTION E-E

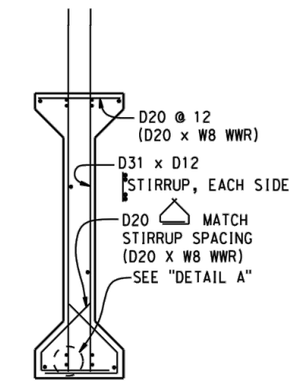

NOTES:

1. For details not shown, see 'SECTION A-A' and 'TYPICAL GIRDER SECTION' on "PC/PRETENSIONED I GIRDER" sheet.
2. W8 WWR not shown.

WELDED WIRE REINFORCEMENT (WWR) ALTERNATIVE

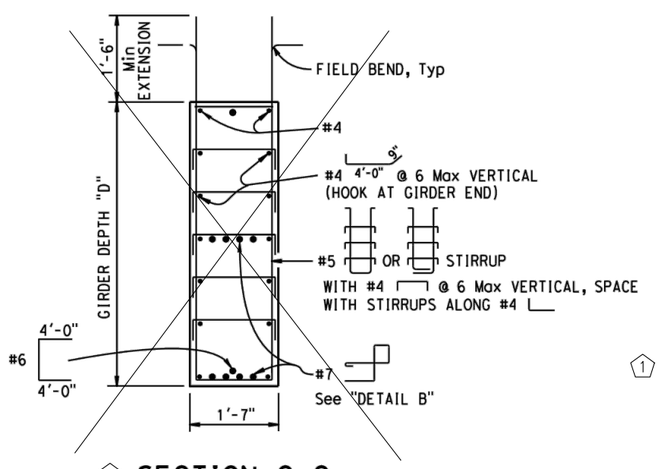

1 SECTION C-C

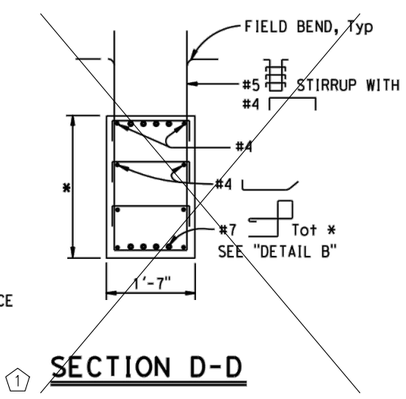

1 SECTION D-D

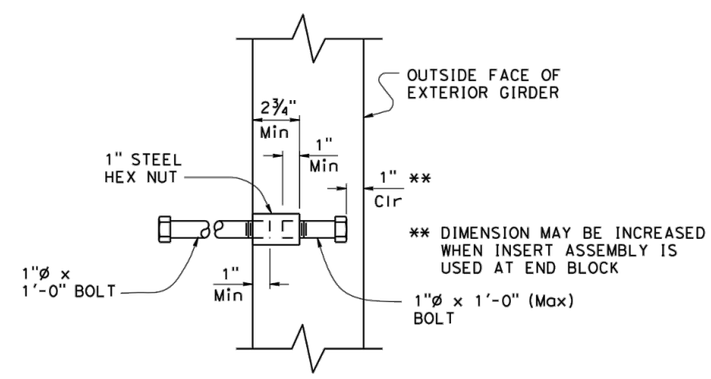

DETAIL C

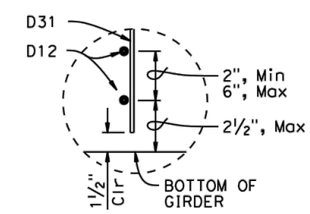

NOTES:

1. Bottom of stirrup WWR detail shown, top similar.
2. Longitudinal wire area shall be 40% or greater of vertical deformed wire's area.

DETAIL A

100% SUBMITTAL
NOT FOR CONSTRUCTION

SPECIAL DETAILS NO SCALE B-40

BRIDGE STANDARD DETAILS

xs1-120-3	July 2020	The components of the Bridge Standard Details have been prepared under the responsible charge of the Technical Owner, a registered civil engineer in the State of California
FILE NO.	APPROVAL DATE	

Refer to: http://www.dot.ca.gov/hq/esc/techpubs/manual/bridgemanuals/bridge-standard-detail-sheets/index.html

MODIFICATIONS SHOWN:
1 REMOVED DETAIL 3 REMOVED NOTE
2 REPLACED DETAIL

FILE => 202007-xs1-120-3.dgn
USERNAME => $USER TIME PLOTTED => 9:04:17 AM DATE PLOTTED => 8/2/2021

ORIGINAL SCALE IN INCHES FOR REDUCED PLANS 0 1 2 3

STATE OF CALIFORNIA
DEPARTMENT OF TRANSPORTATION

DIVISION OF ENGINEERING SERVICES

BRIDGE NO. 36C0108
POST MILE

MURRAY STREET BRIDGE
SEISMIC RETROFIT AND BARRIER REPLACEMENT
PC/PRETENSIONED I GIRDER (MISC DETAILS)

UNIT:
PROJECT NUMBER & PHASE:
CONTRACT NO.:

DISREGARD PRINTS BEARING EARLIER REVISION DATES

REVISION DATES 06-12-14 01-28-20 07-15-20

SHEET 152 OF 167

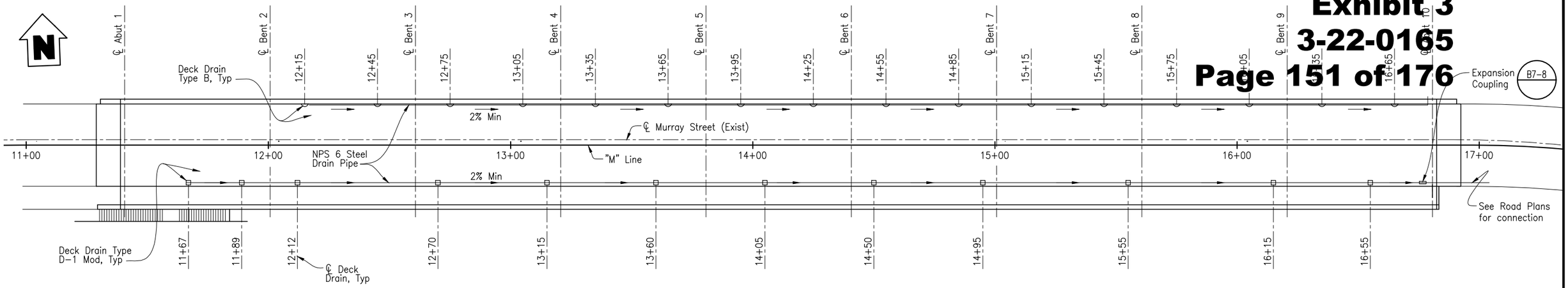

PLAN
1"=20'

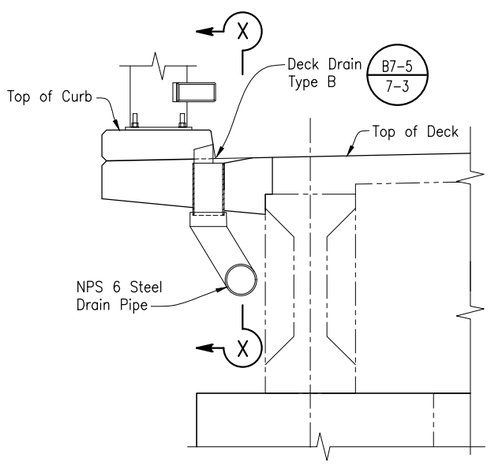

DECK DRAIN TYPE B B7-5 / 7-3
3/4"=1'-0"

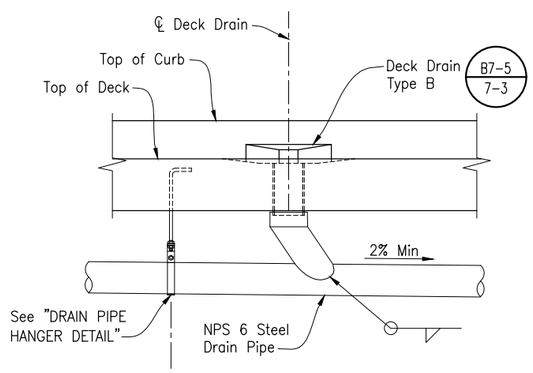

SECTION X-X
3/4"=1'-0"

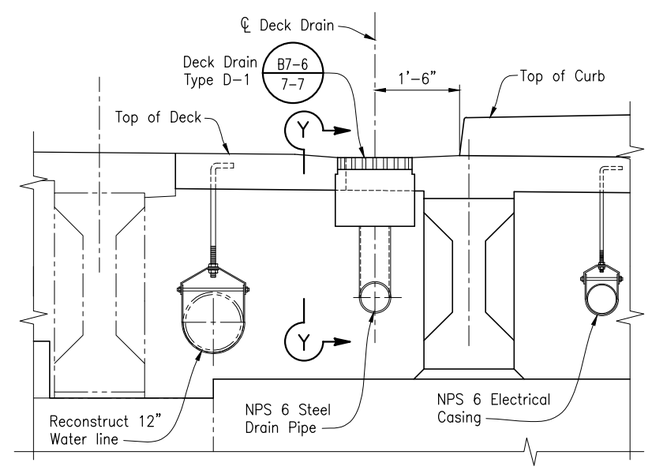

DECK DRAIN TYPE D-1 Mod B7-6 / 7-7
3/4"=1'-0"

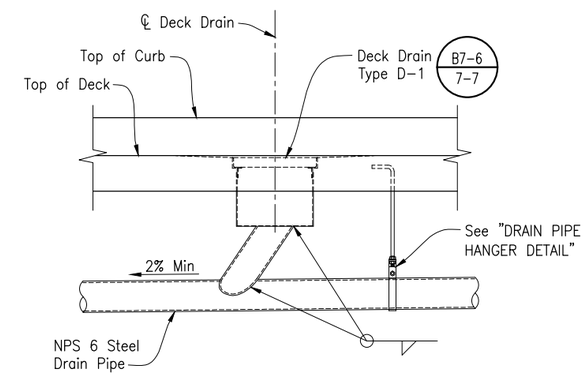

SECTION Y-Y
3/4"=1'-0"

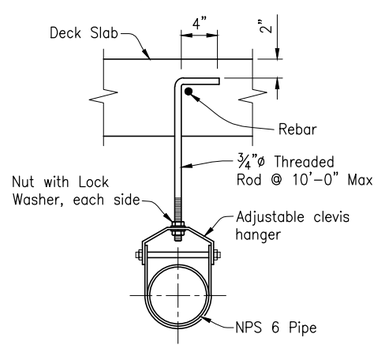

DRAIN PIPE HANGER DETAIL
NTS

LEGEND:
- - - - Indicates Existing Structure
——— Indicates New Structure

NOTE:
THE CONTRACTOR SHALL VERIFY ALL CONTROLLING FIELD DIMENSIONS BEFORE ORDERING OR FABRICATING ANY MATERIAL.

100% SUBMITTAL
NOT FOR CONSTRUCTION

B-41

REGISTERED PROFESSIONAL ENGINEER CAMERON PINKERTON No. 36C0108 Exp. 06-31-22 CIVIL STATE OF CALIFORNIA
REGISTERED ENGINEER – CIVIL
TRC Engineers or its officers or agents shall not be responsible for the accuracy or completeness of electronic copies of this plan sheet

CITY OF SANTA CRUZ
PREPARED FOR THE
CITY OF SANTA CRUZ
PUBLIC WORKS DEPARTMENT

DESIGN	BY C. PINKERTON	CHECKED W. CULLUMBER
DETAILS	BY G. IMBSEN	CHECKED W. CULLUMBER
QUANTITIES	BY C. PINKERTON	CHECKED

ORIGINAL SCALE IN INCHES FOR REDUCED PLANS 0 1 2 3

TRC
MARK IMBRIANI
PROJECT MANAGER

BRIDGE NO. 36C0108
CONTRACT NO.
EA NO.

MURRAY STREET BRIDGE
SEISMIC RETROFIT AND BARRIER REPLACEMENT
DECK DRAIN DETAILS

DISREGARD PRINTS BEARING EARLIER REVISION DATES
REVISION DATES (PRELIMINARY STAGE ONLY) 09-13-13 07-01-15 07-23-21

SCALE AS SHOWN
SHEET 153 OF 167
VAULT NO. XXXXXXX

Drawing name: H:\1161 – Santa Cruz\Murray Street Bridge Seismic Retrofit\041-Drianage Det.dwg Layout Tab: Layout1 Oct 08,2021 – 10:21am gimbsen

Dist	COUNTY	ROUTE	POST MILES TOTAL PROJECT	SHEET No.	TOTAL SHEETS
05	SCr				

REGISTERED CIVIL ENGINEER DATE

PLANS APPROVAL DATE

REGISTERED PROFESSIONAL ENGINEER CAMERON J. PINKERTON No. 73288 Exp. 12-31-22 CIVIL STATE OF CALIFORNIA

THE STATE OF CALIFORNIA OR ITS OFFICERS OR AGENTS SHALL NOT BE RESPONSIBLE FOR THE ACCURACY OR COMPLETENESS OF SCANNED COPIES OF THIS PLAN SHEET.

THE REGISTERED CIVIL ENGINEER FOR THE PROJECT IS RESPONSIBLE FOR THE SELECTION AND PROPER APPLICATION OF THE COMPONENT DESIGN AND ANY MODIFICATIONS SHOWN.

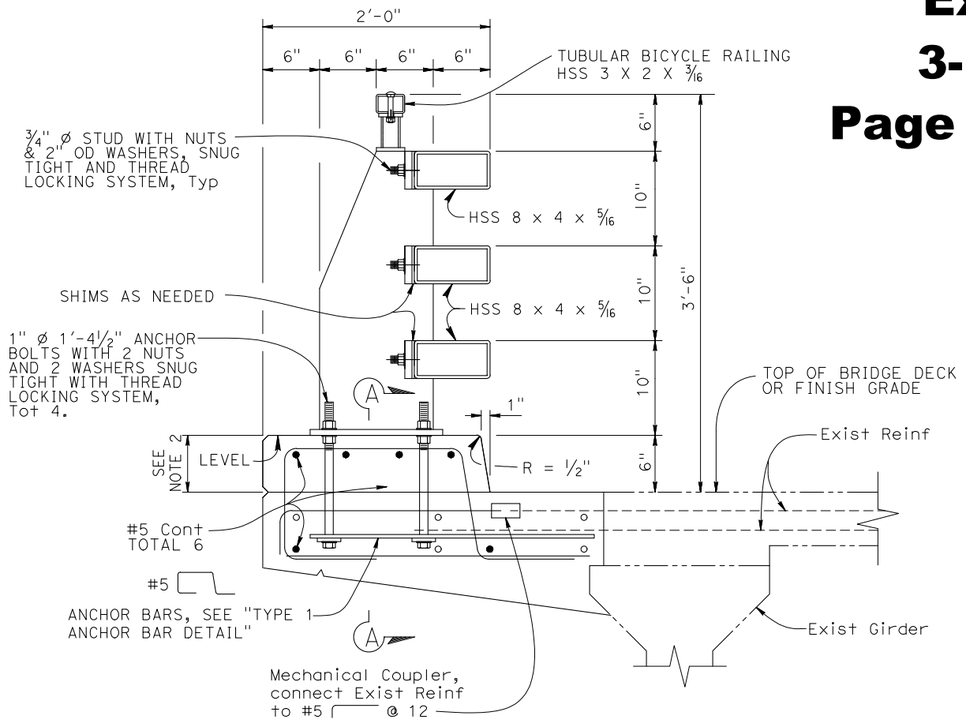

Note: For Reinforcement details not shown see "TYPICAL SECTION" sheet.

1 TYPICAL SECTION
NO SCALE

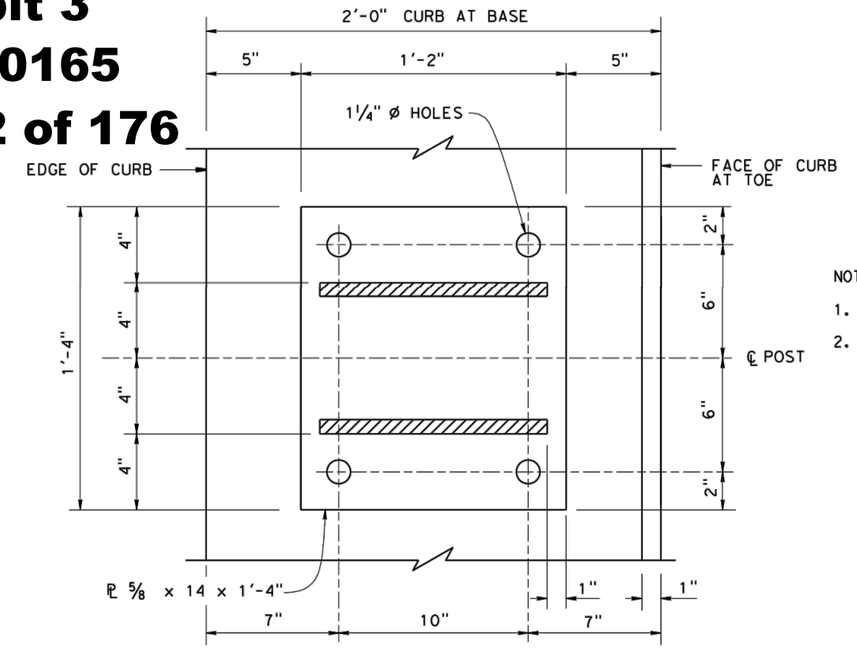

BASE PLATE
NO SCALE

NOTES:

1. Anchor bolts may be tack welded to anchorage.
2. Curb dimension at back side of rail will vary with bridge deck cross slope, and if overlay is placed on the bridge deck.

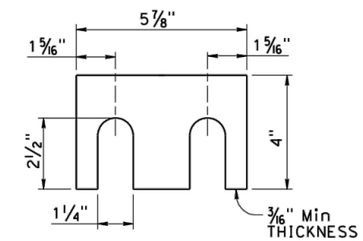

SHIM DETAILS
NO SCALE

NOTE:
Shims as needed between posts and HSS rail tubes.

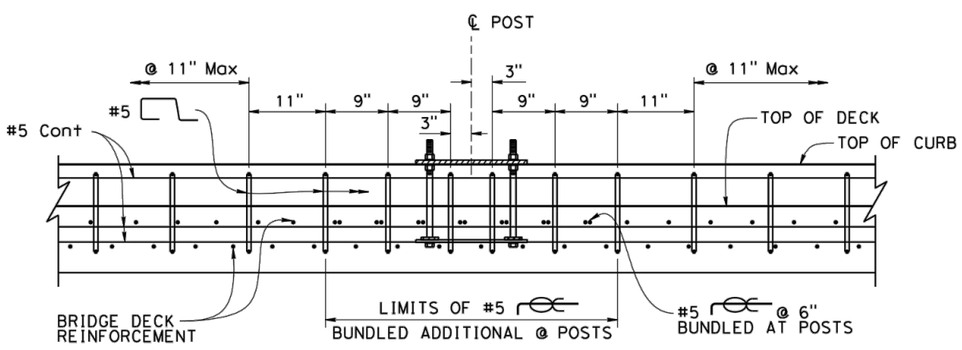

NOTE:
POST NOT SHOWN FOR CLARITY

SECTION A-A
NO SCALE

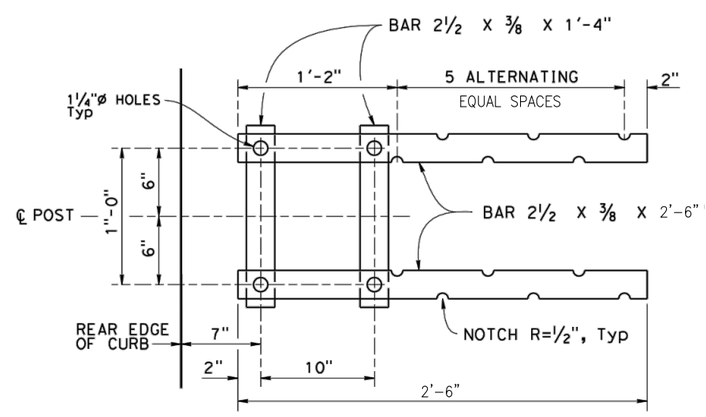

1 TYPE 1 ANCHOR BAR DETAIL
NO SCALE

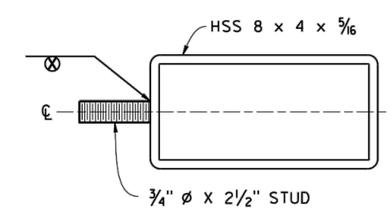

RAIL SECTION AT POST
NO SCALE

100% SUBMITTAL
NOT FOR CONSTRUCTION

SPECIAL DETAILS B-42

BRIDGE STANDARD DETAILS		
xs16-116-1 (FILE NO.)	January 2021 (APPROVAL DATE)	*The components of the Bridge Standard Details have been prepared under the responsible charge of the Technical Owner, a registered civil engineer in the State of California*

MODIFICATIONS SHOWN:
1 MODIFIED DETAIL

STATE OF CALIFORNIA
DEPARTMENT OF TRANSPORTATION

DIVISION OF ENGINEERING SERVICES

BRIDGE No. 36C0108
POST MILE

CALIFORNIA ST-75 BRIDGE RAIL
DETAILS No. 1

Refer to: http://www.dot.ca.gov/hq/esc/techpubs/manual/bridgemanuals/bridge-standard-detail-sheets/index.html

DATE PLOTTED => 8/2/2021 TIME PLOTTED => 9:14:30 AM
FILE => 202101-xs16-116-1.dgn USERNAME => $USER

ORIGINAL SCALE IN INCHES FOR REDUCED PLANS 0 1 2 3

UNIT:
PROJECT NUMBER & PHASE:
CONTRACT No.:

DISREGARD PRINTS BEARING EARLIER REVISION DATES 12-14-19 1-28-21 2-3-21

SHEET 154 OF 167

Dist	COUNTY	ROUTE	POST MILES TOTAL PROJECT	SHEET No.	TOTAL SHEETS
05	SBd				

REGISTERED CIVIL ENGINEER DATE

PLANS APPROVAL DATE

THE STATE OF CALIFORNIA OR ITS OFFICERS OR AGENTS SHALL NOT BE RESPONSIBLE FOR THE ACCURACY OR COMPLETENESS OF SCANNED COPIES OF THIS PLAN SHEET.

REGISTERED PROFESSIONAL ENGINEER CAMERON J. PINKERTON No. 73288 Exp. 12-31-22 CIVIL STATE OF CALIFORNIA

THE REGISTERED CIVIL ENGINEER FOR THE PROJECT IS RESPONSIBLE FOR THE SELECTION AND PROPER APPLICATION OF THE COMPONENT DESIGN AND ANY MODIFICATIONS SHOWN.

Exhibit 3
3-22-0165
Page 153 of 176

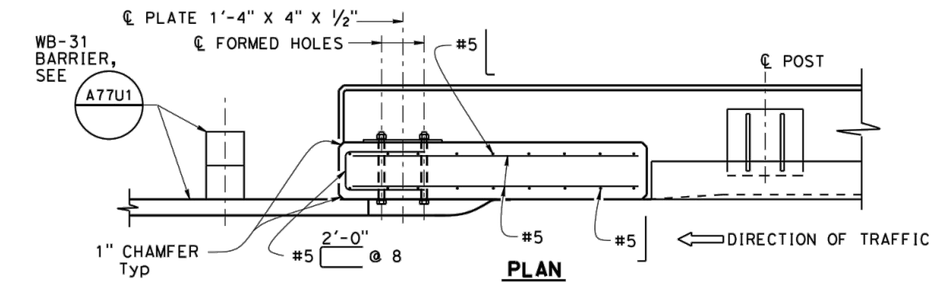

DEPARTURE END BLOCK DETAIL

NO SCALE

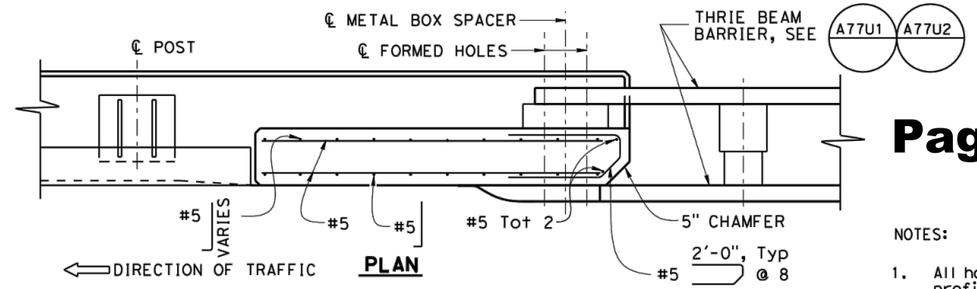

APPROACH TRANSITION BLOCK DETAIL

NO SCALE

NOTES:

1. All horizontal members are parallel to longitudinal profile grade.
2. Posts are normal to profile grade of structure.
3. Posts are vertical to the transverse cross section.
4. If departure end block is within the Clear Recovery Zone (CRZ, 30 feet for expressways and freeways and 20 feet for conventional highways) of opposing traffic, then use the approach end block at the departure end.
5. Anchor bolts may be tack welded to anchorage.

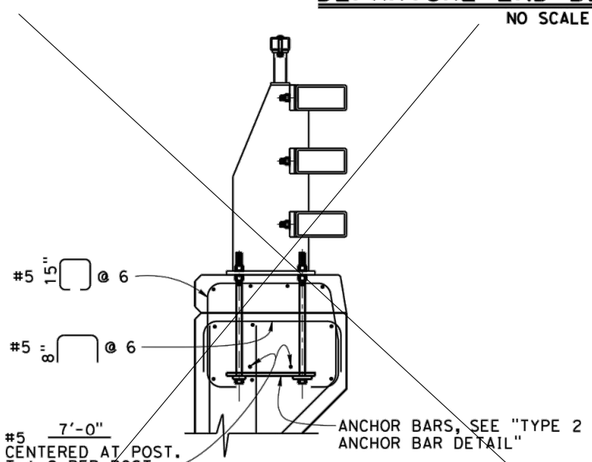

2 SECTION B-B

NO SCALE

NOTE:
For details not shown see "Section C-C"

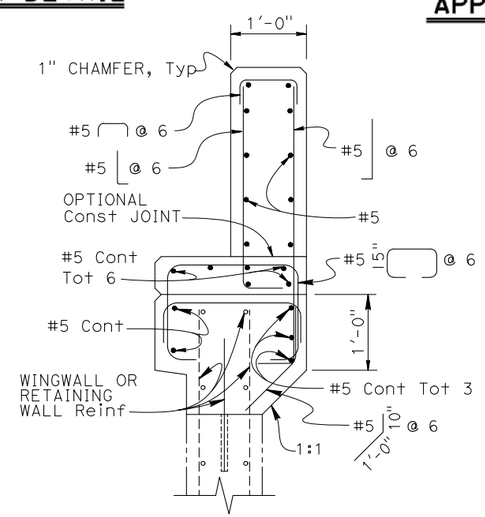

1 SECTION C-C

NO SCALE

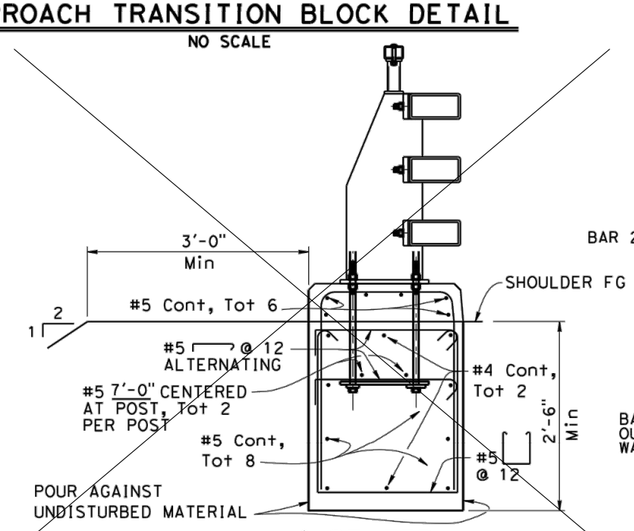

2 ST-75B

NO SCALE

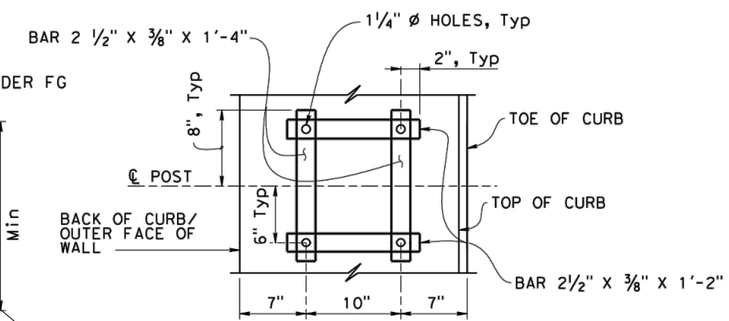

TYPE 2 ANCHOR BAR DETAIL

NO SCALE

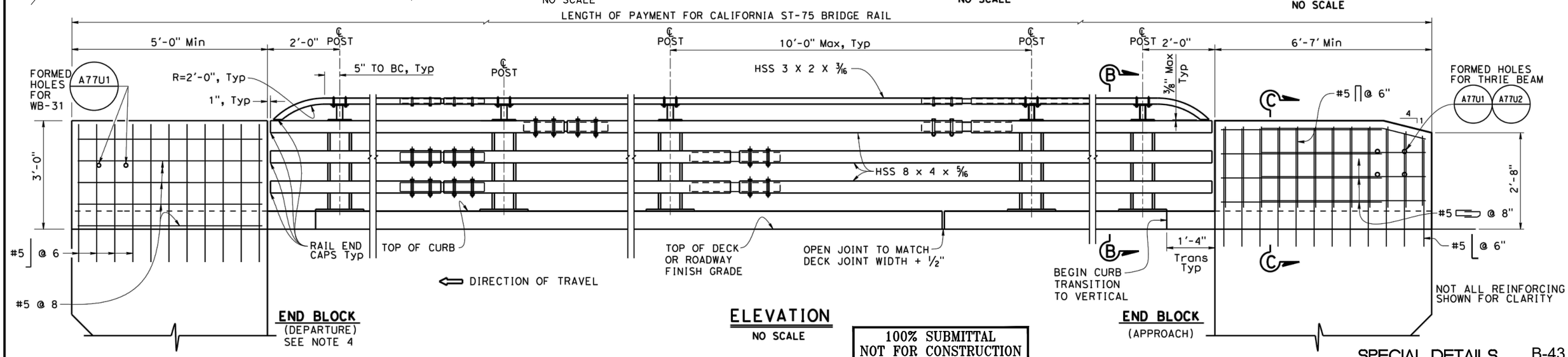

ELEVATION

NO SCALE

100% SUBMITTAL
NOT FOR CONSTRUCTION

SPECIAL DETAILS B-43

BRIDGE STANDARD DETAILS		
xs16-116-2 (FILE NO.)	January 2021 (APPROVAL DATE)	*The components of the Bridge Standard Details have been prepared under the responsible charge of the Technical Owner, a registered civil engineer in the State of California*

MODIFICATIONS SHOWN:
1 MODIFIED DETAIL
2 REMOVED DETAIL

STATE OF CALIFORNIA
DEPARTMENT OF TRANSPORTATION

DIVISION OF ENGINEERING SERVICES

BRIDGE No. 36C0108
POST MILE

CALIFORNIA ST-75 BRIDGE RAIL
DETAILS No. 2

Refer to: http://www.dot.ca.gov/hq/esc/techpubs/manual/bridgemanuals/bridge-standard-detail-sheets/index.html

DATE PLOTTED => 8/2/2021 TIME PLOTTED => 9:24:33 AM
FILE => 202101-xs16-116-2.dgn USERNAME => $USER

ORIGINAL SCALE IN INCHES FOR REDUCED PLANS 0 1 2 3

UNIT:
PROJECT NUMBER & PHASE:
CONTRACT No.:

DISREGARD PRINTS BEARING EARLIER REVISION DATES

REVISION DATES				SHEET	OF
12-12-19		2-3-21	1-14-21	155	167

Dist	COUNTY	ROUTE	POST MILES TOTAL PROJECT	SHEET No.	TOTAL SHEETS
05	SCr				

REGISTERED CIVIL ENGINEER DATE

PLANS APPROVAL DATE

REGISTERED PROFESSIONAL ENGINEER CAMERON J. PINKERTON No. 73288 Exp. 12-31-22 CIVIL STATE OF CALIFORNIA

THE STATE OF CALIFORNIA OR ITS OFFICERS OR AGENTS SHALL NOT BE RESPONSIBLE FOR THE ACCURACY OR COMPLETENESS OF SCANNED COPIES OF THIS PLAN SHEET.

THE REGISTERED CIVIL ENGINEER FOR THE PROJECT IS RESPONSIBLE FOR THE SELECTION AND PROPER APPLICATION OF THE COMPONENT DESIGN AND ANY MODIFICATIONS SHOWN.

Exhibit 3

3-22-0165

Page 154 of 176

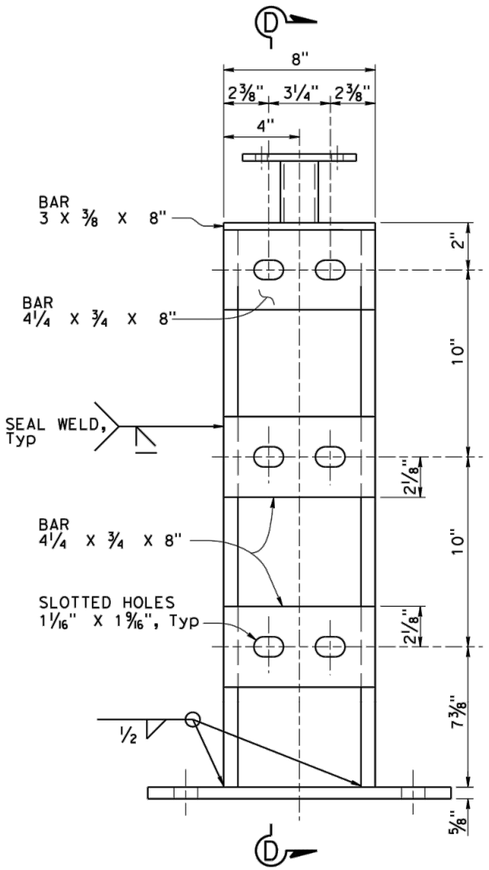

POST DETAIL

NO SCALE

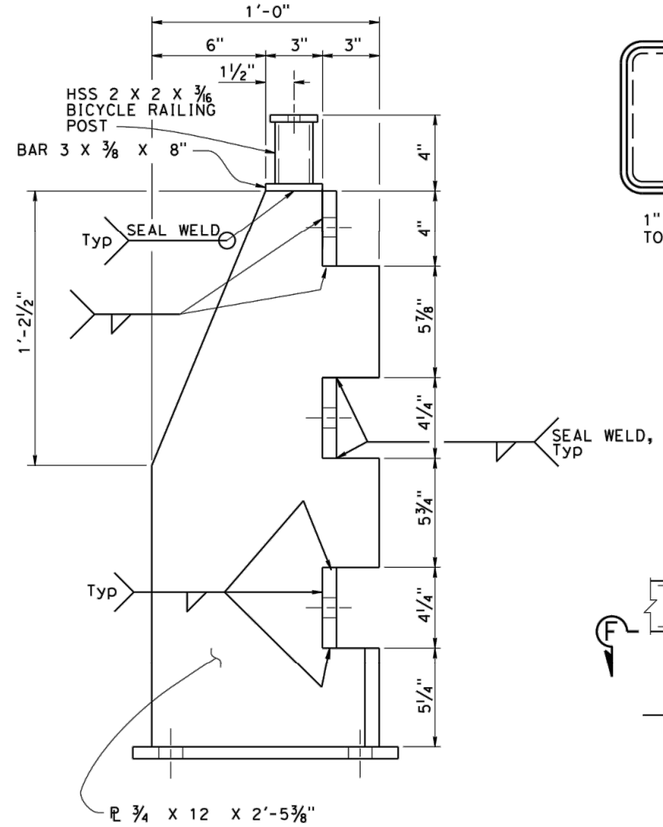

SECTION D-D

NO SCALE

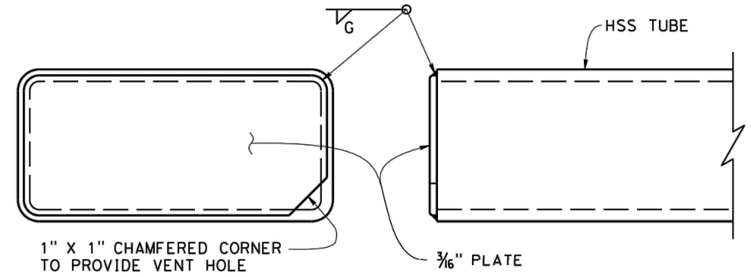

RAIL END CAP

NO SCALE

FOR VEHICULAR RAIL TUBES AND BICYCLE RAIL TUBES

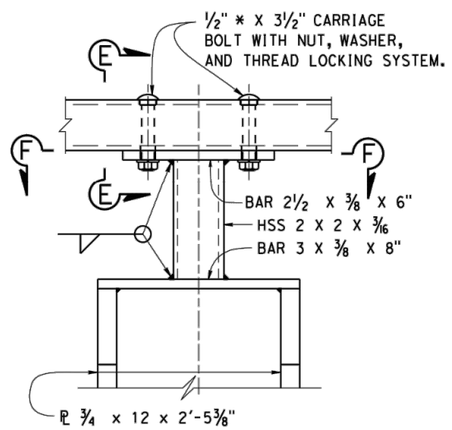

ELEVATION

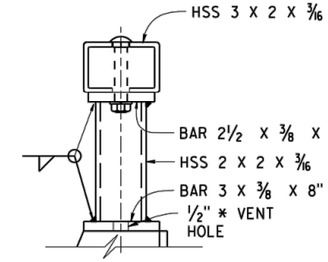

SECTION E-E

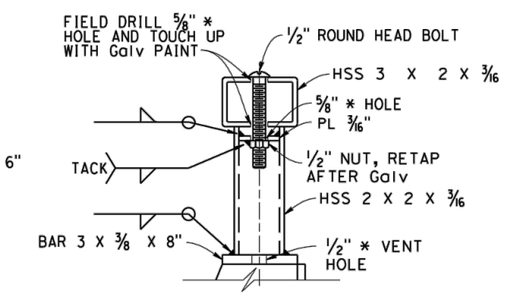

SECTION E-E ALTERNATIVE

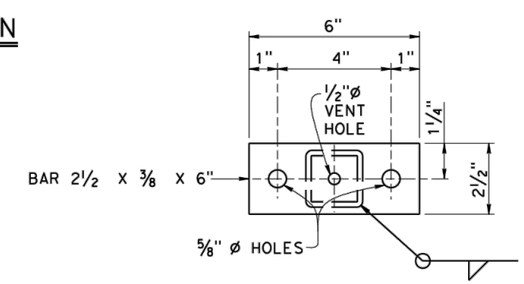

SECTION F-F

BICYCLE RAILING CONNECTION DETAILS

NO SCALE

100% SUBMITTAL
NOT FOR CONSTRUCTION

B-44

BRIDGE STANDARD DETAILS		
xs16-116-3 (FILE NO.)	July 2020 (APPROVAL DATE)	*The components of the Bridge Standard Details have been prepared under the responsible charge of the Technical Owner, a registered civil engineer in the State of California*

STATE OF CALIFORNIA DEPARTMENT OF TRANSPORTATION

DIVISION OF ENGINEERING SERVICES

BRIDGE No. 36C0108

POST MILE

CALIFORNIA ST-75 BRIDGE RAIL

DETAILS No. 3

Refer to: http://www.dot.ca.gov/hq/esc/techpubs/manual/bridgemanuals/bridge-standard-detail-sheets/index.html

DATE PLOTTED => 8/2/2021 TIME PLOTTED => 9:28:44 AM
FILE => 202007-xs16-116-3.dgn USERNAME => $USER

ORIGINAL SCALE IN INCHES FOR REDUCED PLANS 0 1 2 3

UNIT:
PROJECT NUMBER & PHASE:
CONTRACT No.:

DISREGARD PRINTS BEARING EARLIER REVISION DATES

REVISION DATES: 12-18-19 7-14-20 4-18-20

SHEET 156 OF 167

Dist	COUNTY	ROUTE	POST MILES TOTAL PROJECT	SHEET No.	TOTAL SHEETS
05	SC				

REGISTERED CIVIL ENGINEER DATE

PLANS APPROVAL DATE

REGISTERED PROFESSIONAL ENGINEER CAMERON J. PINKERTON No. 73288 Exp. 12-31-22 CIVIL STATE OF CALIFORNIA

THE STATE OF CALIFORNIA OR ITS OFFICERS OR AGENTS SHALL NOT BE RESPONSIBLE FOR THE ACCURACY OR COMPLETENESS OF SCANNED COPIES OF THIS PLAN SHEET.

THE REGISTERED CIVIL ENGINEER FOR THE PROJECT IS RESPONSIBLE FOR THE SELECTION AND PROPER APPLICATION OF THE COMPONENT DESIGN AND ANY MODIFICATIONS SHOWN.

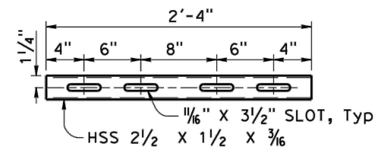

HSS 3 X 2 X 3/16 RAIL

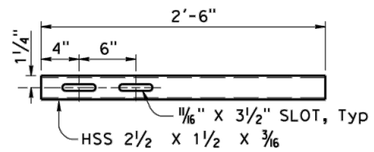

HSS 3 X 2 X 3/16 RAIL

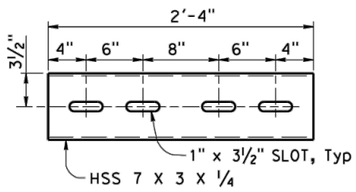

HSS 8 X 4 X 5/16 RAIL

STANDARD SLEEVES DETAILS

NO SCALE

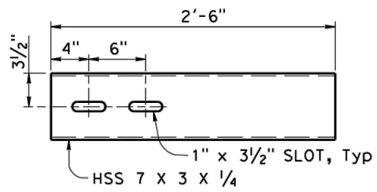

HSS 8 X 4 X 5/16 RAIL

EXPANSION SLEEVES DETAILS

NO SCALE

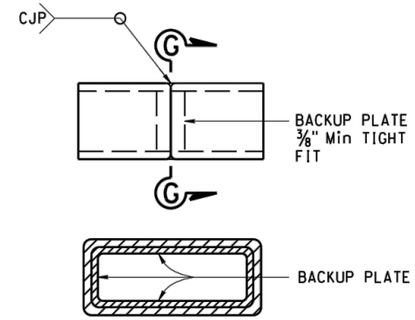

SECTION G-G

ALTERNATE TUBE WELDED STANDARD SPLICE

NO SCALE

NOTES:

1. HS bolts with nut and washers, snug tightened, and thread locking system.
2. Use ½"* X 3 5/16 BOLTS (HSS 3 X 2 X 3/16)
   Use ¾"* X 5 5/16 BOLTS (HSS 8 X 4 X 5/16)
3. Each rail length must be continuous over a minimum of two posts.
4. The fabricator must check that the tubular sleeve splices conform to the dimensions indicated to assure proper clearance.
5. Except for expansion splices, not more than one splice permitted per same side of post.

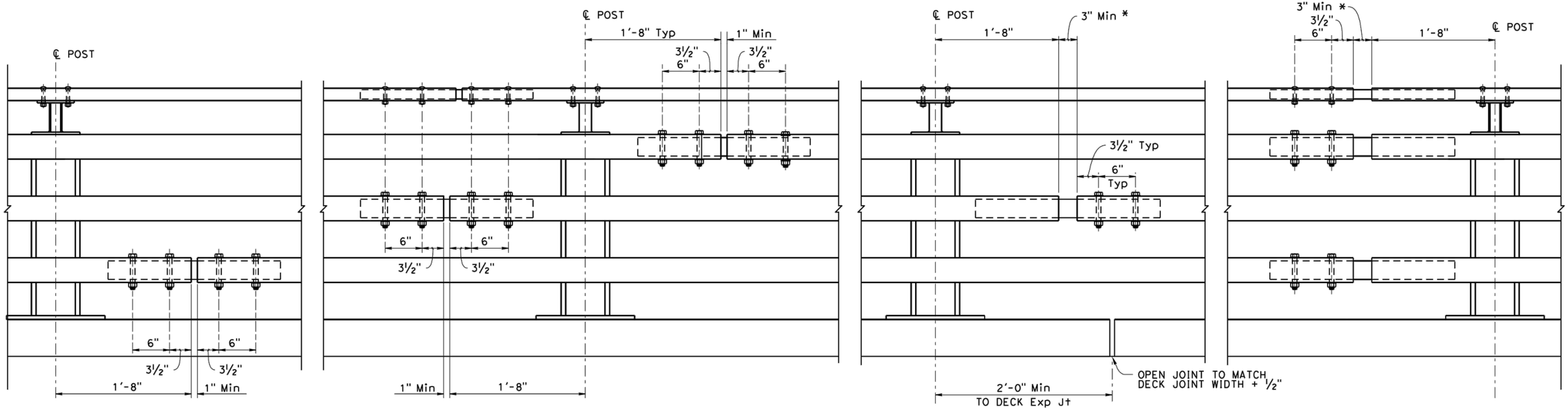

STANDARD SPLICE

NO SCALE

EXPANSION SPLICE

NO SCALE

* MATCH DECK OR WALL JOINT

100% SUBMITTAL
NOT FOR CONSTRUCTION

BRIDGE STANDARD DETAILS		
xs16-116-4 (FILE NO.)	July 2020 (APPROVAL DATE)	*The components of the Bridge Standard Details have been prepared under the responsible charge of the Technical Owner, a registered civil engineer in the State of California*

STATE OF CALIFORNIA DEPARTMENT OF TRANSPORTATION

DIVISION OF ENGINEERING SERVICES

BRIDGE No. 36C0108

POST MILE

CALIFORNIA ST-75 BRIDGE RAIL

DETAILS No. 4

Refer to: http://www.dot.ca.gov/hq/esc/techpubs/manual/bridgemanuals/bridge-standard-detail-sheets/index.html

DATE PLOTTED => 8/2/2021 TIME PLOTTED => 9:31:20 AM
FILE => 202007-xs16-116-4.dgn USERNAME => $USER

ORIGINAL SCALE IN INCHES FOR REDUCED PLANS 0 1 2 3

UNIT:
PROJECT NUMBER & PHASE:
CONTRACT No.:

DISREGARD PRINTS BEARING EARLIER REVISION DATES

REVISION DATES: 12-15-15 7-14-20 4-18-20

SHEET 157 OF 167

Dist	COUNTY	ROUTE	POST MILES TOTAL PROJECT	SHEET No.	TOTAL SHEETS
05	SBd				

REGISTERED CIVIL ENGINEER DATE

PLANS APPROVAL DATE

REGISTERED PROFESSIONAL ENGINEER CAMERON J. PINKERTON No. 73288 Exp. 12-31-22 CIVIL STATE OF CALIFORNIA

THE STATE OF CALIFORNIA OR ITS OFFICERS OR AGENTS SHALL NOT BE RESPONSIBLE FOR THE ACCURACY OR COMPLETENESS OF SCANNED COPIES OF THIS PLAN SHEET.

THE REGISTERED CIVIL ENGINEER FOR THE PROJECT IS RESPONSIBLE FOR THE SELECTION AND PROPER APPLICATION OF THE COMPONENT DESIGN AND ANY MODIFICATIONS SHOWN.

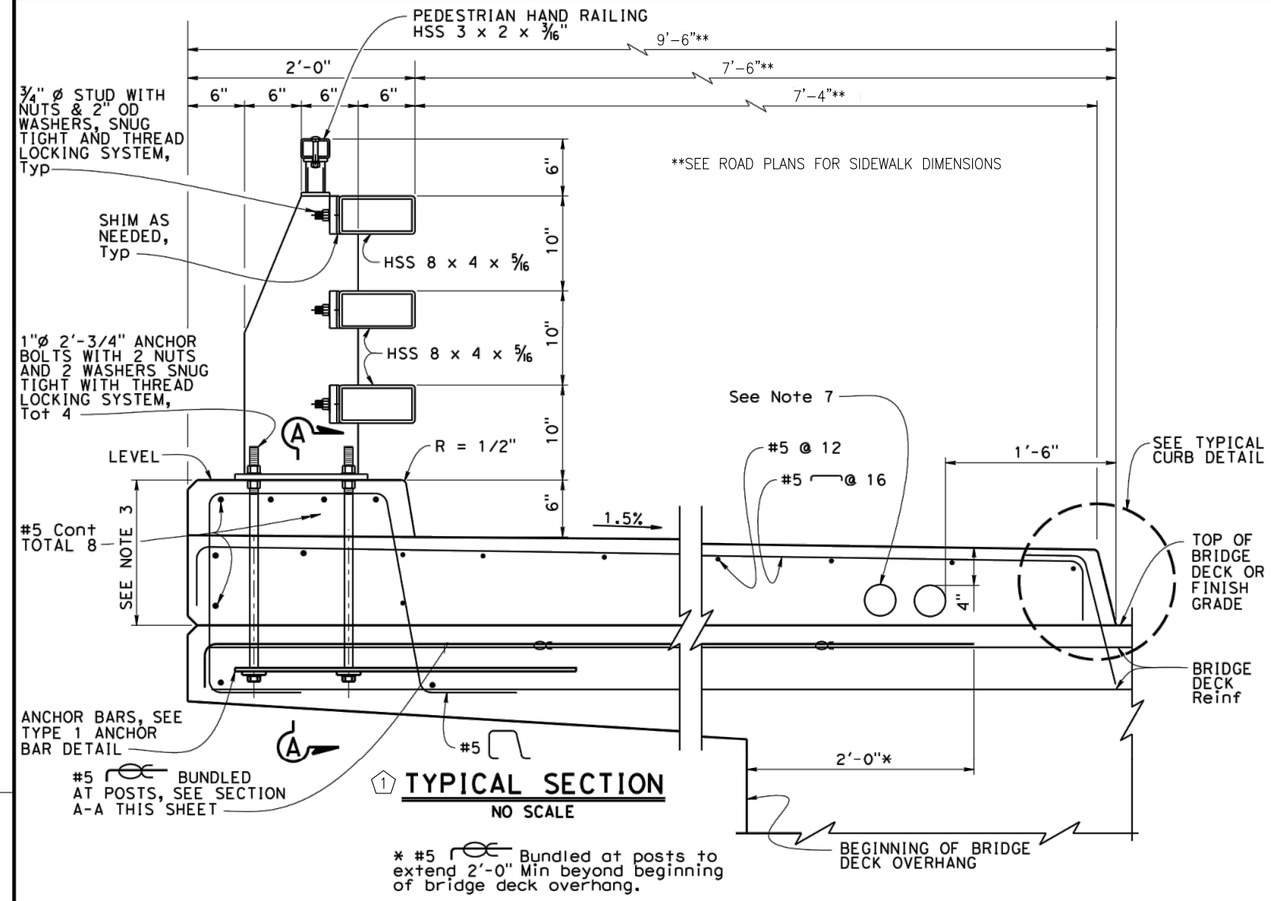

1 TYPICAL SECTION
NO SCALE

* #5 Bundled at posts to extend 2'-0" Min beyond beginning of bridge deck overhang.

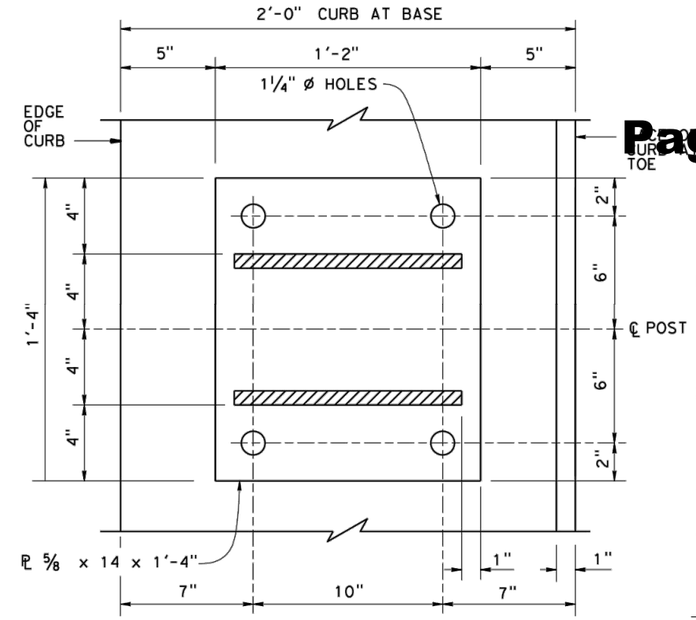

BASE PLATE
NO SCALE

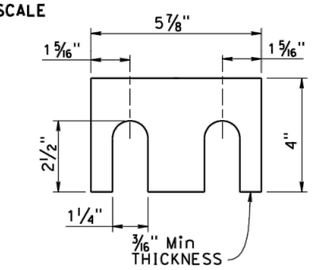

SHIM DETAILS
NO SCALE

NOTES:

1. This barrier is to be used only for posted speeds of 45 MPH or less. For speeds greater than 45 MPH, pedestrians must be protected by a separation traffic barrier.
2. Anchor bolts may be welded to anchor bars.
3. Dimensions will vary with cross slope of sidewalk and bridge deck, and sidewalk width, and if overlay is placed on deck.
4. Walls must be backfilled before curb and parapet is placed.
5. Clearance to reinforcing steel in curb and railing is 2" except as noted. Longitudinal reinforcement to stop at all expansion joints.
6. ~~See Project Plans for "Joint Armor For Pedestrian Walkways and Sidewalks" details.~~
7. A minimum of two 4" round openings for future utilities and a maximum of six 4" round openings for a 6'-2" sidewalk. One 4" round opening can be added for each additional 1'-0" of sidewalk width. Utility opening must be a minimum of 6" from face of barrier parapet. Openings are to be sealed at ends and extended 8" minimum past end of sidewalk if not used. Duct forms are to be tied down. For exact number and placement of utility openings see other details. Minimum 2" clear between conduits.
8. See Project Plans for pull box location and type.

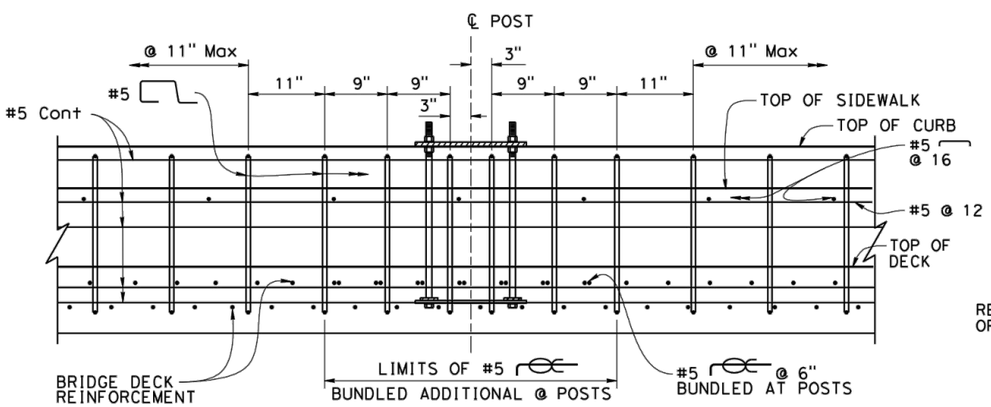

POST NOT SHOWN FOR CLARITY

SECTION A-A
NO SCALE

100% SUBMITTAL
NOT FOR CONSTRUCTION

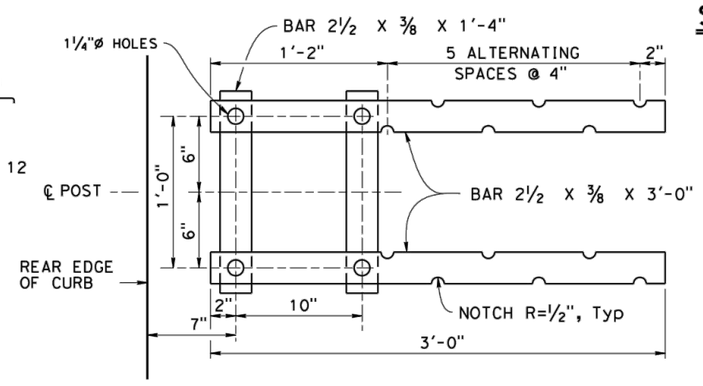

TYPE 1 ANCHOR BAR DETAIL
NO SCALE

NOTE:
Shims as needed between posts and HSS rail tubes.

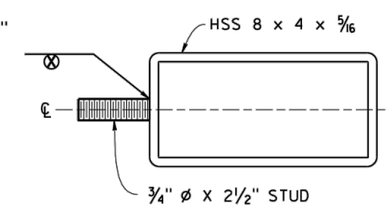

RAIL SECTION AT POST
NO SCALE

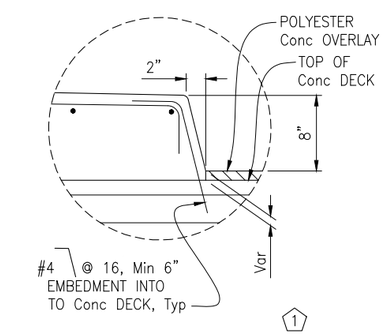

1 TYPICAL CURB DETAIL
NO SCALE

SPECIAL DETAILS B-46

BRIDGE STANDARD DETAILS		
xs16-119-1 (FILE NO.)	January 2021 (APPROVAL DATE)	*The components of the Bridge Standard Details have been prepared under the responsible charge of the Technical Owner, a registered civil engineer in the State of California*

MODIFICATIONS SHOWN:
1 REVISED DETAIL
2 REMOVED NOTE

STATE OF CALIFORNIA
DEPARTMENT OF TRANSPORTATION

DIVISION OF ENGINEERING SERVICES

BRIDGE No. 36C0108
POST MILE

CALIFORNIA ST-75SW BRIDGE RAIL
DETAILS No. 1

Refer to: http://www.dot.ca.gov/hq/esc/techpubs/manual/bridgemanuals/bridge-standard-detail-sheets/index.html

DATE PLOTTED => 8/2/2021 TIME PLOTTED => 9:34:51 AM
FILE => 202101-xs16-119-1.dgn USERNAME => $USER
ORIGINAL SCALE IN INCHES FOR REDUCED PLANS 0 1 2 3

UNIT:
PROJECT NUMBER & PHASE:
CONTRACT No.:

DISREGARD PRINTS BEARING EARLIER REVISION DATES
REVISION DATES: 06-01-20 02-04-21 10-12-20
SHEET 158 OF 167

Dist	COUNTY	ROUTE	POST MILES TOTAL PROJECT	SHEET No.	TOTAL SHEETS
05	SBd				

Exhibit 3
3-22-0165
Page 157 of 176

REGISTERED CIVIL ENGINEER DATE

PLANS APPROVAL DATE

CAMERON J. PINKERTON No. 73288 Exp. 12-31-22 CIVIL STATE OF CALIFORNIA REGISTERED PROFESSIONAL ENGINEER

THE STATE OF CALIFORNIA OR ITS OFFICERS OR AGENTS SHALL NOT BE RESPONSIBLE FOR THE ACCURACY OR COMPLETENESS OF SCANNED COPIES OF THIS PLAN SHEET.

THE REGISTERED CIVIL ENGINEER FOR THE PROJECT IS RESPONSIBLE FOR THE SELECTION AND PROPER APPLICATION OF THE COMPONENT DESIGN AND ANY MODIFICATIONS SHOWN.

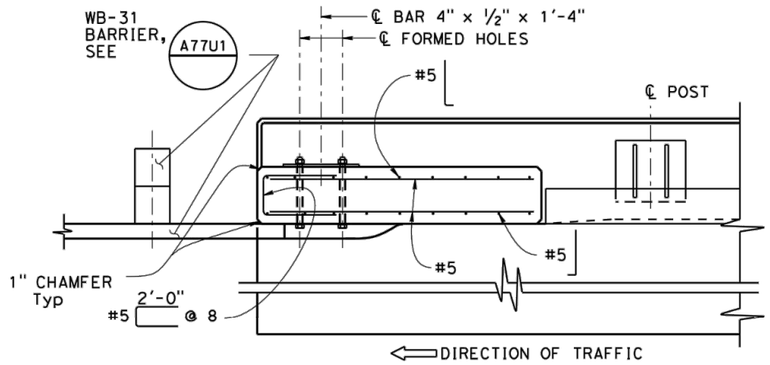

PLAN

DEPARTURE END BLOCK DETAIL

NO SCALE

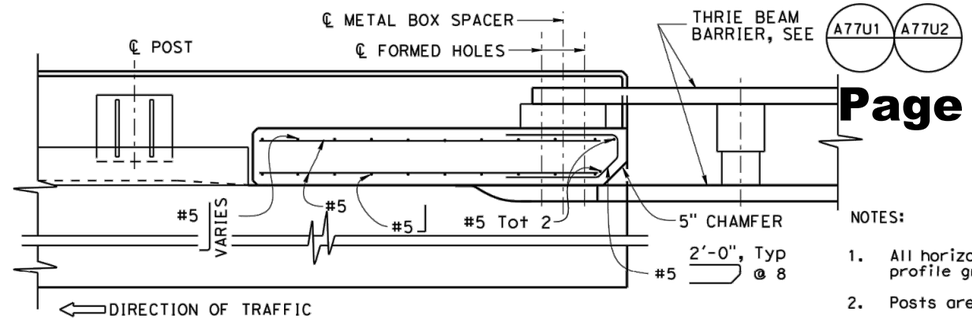

PLAN

APPROACH TRANSITION BLOCK DETAIL

NO SCALE

NOTES:

1. All horizontal members are parallel to longitudinal profile grade.
2. Posts are normal to profile grade of structure.
3. Posts are vertical to the transverse cross section.
4. If departure end block is within the Clear Recovery Zone (CRZ, 30 feet for expressways and freeways and 20 feet for conventional highways) of opposing traffic, then use the approach end block at the departure end.
5. Anchor bolts may be tack welded to anchorage.
6. For sidewalk reinforcement, see CALIFORNINIA ST-75SW BRIDGE RAIL-DETAILS No. 1 sheet,

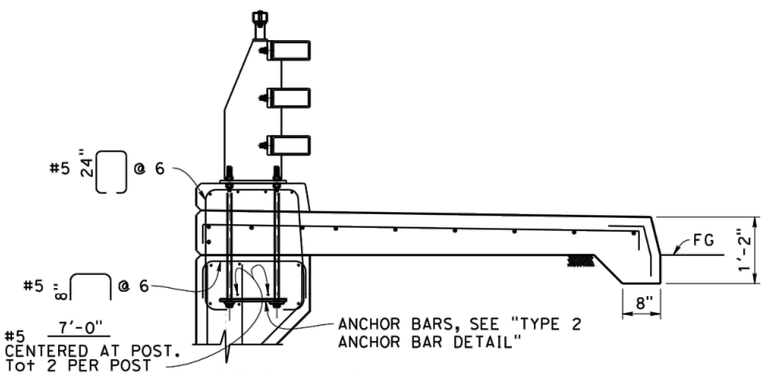

SECTION B-B

NO SCALE

NOTE:
For details not shown see "Section C-C"

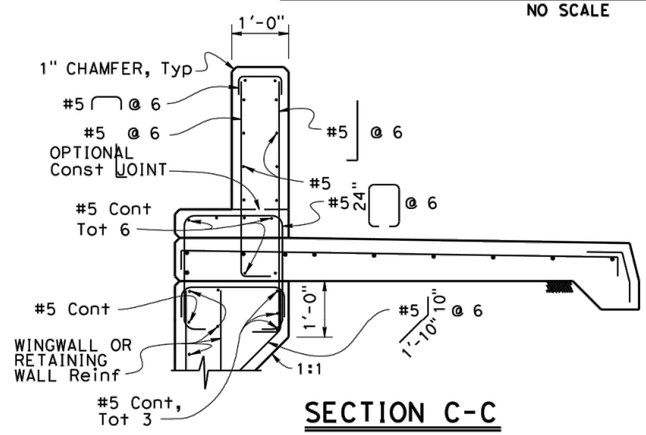

SECTION C-C

NO SCALE

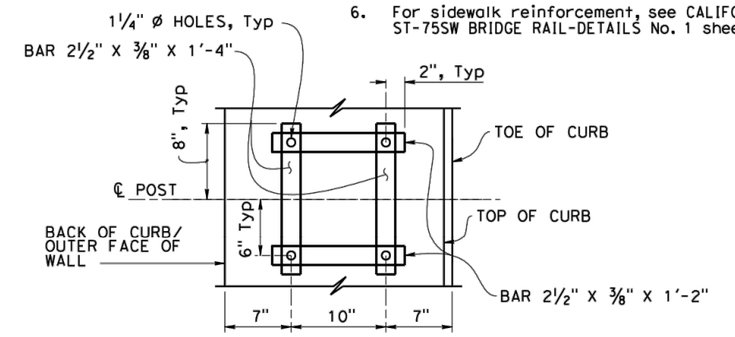

TYPE 2 ANCHOR BAR DETAIL

NO SCALE

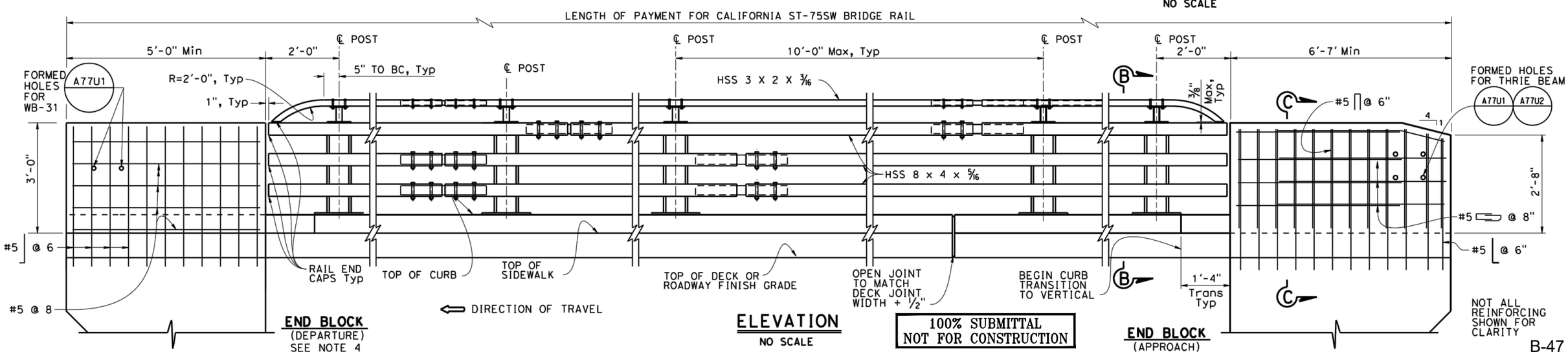

ELEVATION

NO SCALE

100% SUBMITTAL
NOT FOR CONSTRUCTION

BRIDGE STANDARD DETAILS		
xs16-119-2 (FILE NO.)	January 2021 (APPROVAL DATE)	*The components of the Bridge Standard Details have been prepared under the responsible charge of the Technical Owner, a registered civil engineer in the State of California*

STATE OF CALIFORNIA DEPARTMENT OF TRANSPORTATION

DIVISION OF ENGINEERING SERVICES

BRIDGE No. 36C0108

POST MILE

CALIFORNIA ST-75SW BRIDGE RAIL
DETAILS No. 2

Refer to: http://www.dot.ca.gov/hq/esc/techpubs/manual/bridgemanuals/bridge-standard-detail-sheets/index.html

DATE PLOTTED => 8/2/2021 TIME PLOTTED => 9:49:42 AM
FILE => 202101-xs16-119-2.dgn USERNAME => #USER

ORIGINAL SCALE IN INCHES FOR REDUCED PLANS 0 1 2 3

UNIT:
PROJECT NUMBER & PHASE:
CONTRACT No.:

DISREGARD PRINTS BEARING EARLIER REVISION DATES

REVISION DATES: 9/18/20 02-04-21 1-26-21

SHEET 159 OF 167

Dist	COUNTY	ROUTE	POST MILES TOTAL PROJECT	SHEET No.	TOTAL SHEETS
05	Cc				

Exhibit 3
3-22-0165
Page 158 of 176

REGISTERED CIVIL ENGINEER DATE

PLANS APPROVAL DATE

THE STATE OF CALIFORNIA OR ITS OFFICERS OR AGENTS SHALL NOT BE RESPONSIBLE FOR THE ACCURACY OR COMPLETENESS OF SCANNED COPIES OF THIS PLAN SHEET.

REGISTERED PROFESSIONAL ENGINEER CAMERON J. PINKERTON No. 73288 Exp. 12-31-22 CIVIL STATE OF CALIFORNIA

THE REGISTERED CIVIL ENGINEER FOR THE PROJECT IS RESPONSIBLE FOR THE SELECTION AND PROPER APPLICATION OF THE COMPONENT DESIGN AND ANY MODIFICATIONS SHOWN.

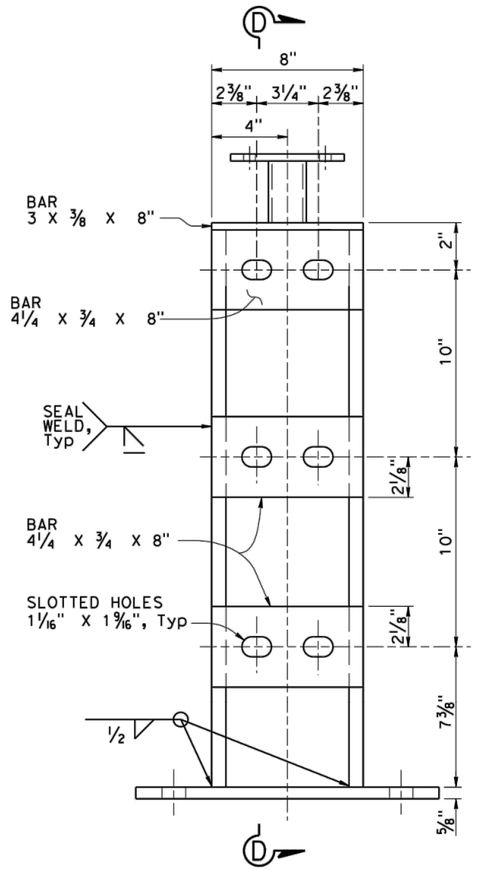

POST DETAIL
NO SCALE

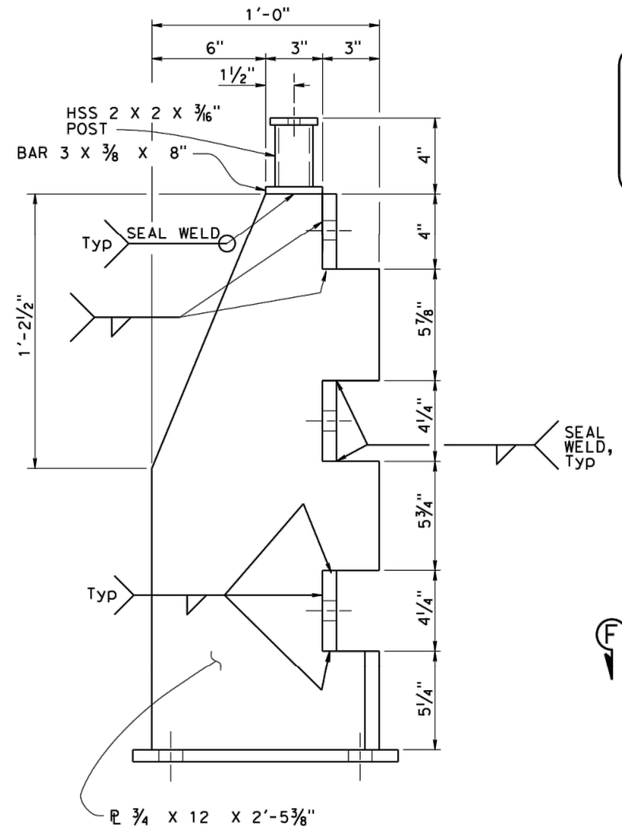

SECTION D-D
NO SCALE

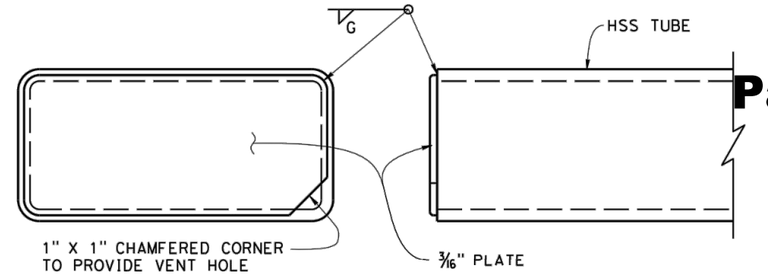

RAIL END CAP
NO SCALE
FOR VEHICULAR RAIL TUBES
AND PEDESTRIAN HAND RAILING TUBES

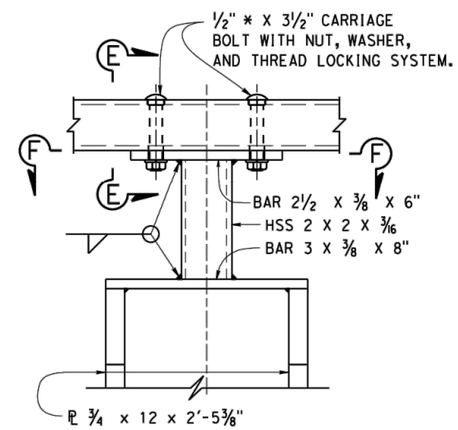

ELEVATION

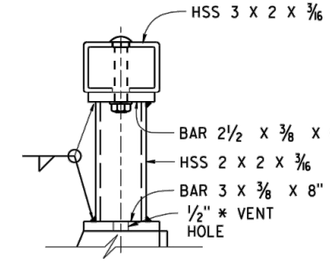

SECTION E-E

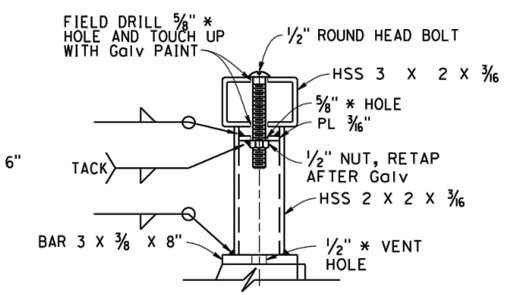

SECTION E-E
ALTERNATIVE

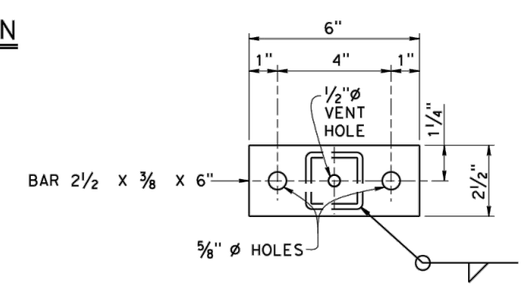

SECTION F-F

PEDESTRIAN HAND RAILING CONNECTION DETAILS
NO SCALE

100% SUBMITTAL
NOT FOR CONSTRUCTION

B-48

BRIDGE STANDARD DETAILS		
xs16-119-3 (FILE NO.)	January 2021 (APPROVAL DATE)	The components of the Bridge Standard Details have been prepared under the responsible charge of the Technical Owner, a registered civil engineer in the State of California

STATE OF CALIFORNIA DEPARTMENT OF TRANSPORTATION

DIVISION OF ENGINEERING SERVICES

BRIDGE No. 36C0108

POST MILE

CALIFORNIA ST-75SW BRIDGE RAIL

DETAILS No.3

Refer to: http://www.dot.ca.gov/hq/esc/techpubs/manual/bridgemanuals/bridge-standard-detail-sheets/index.html

DATE PLOTTED => 8/2/2021 TIME PLOTTED => 9:50:26 AM
FILE => 202101-xs16-119-3.dgn USERNAME => $USER

ORIGINAL SCALE IN INCHES FOR REDUCED PLANS 0 1 2 3

UNIT:
PROJECT NUMBER & PHASE:
CONTRACT No.:

DISREGARD PRINTS BEARING EARLIER REVISION DATES

REVISION DATES: 09-18-20 02-04-21 10-12-20

SHEET 160 OF 167

Dist	COUNTY	ROUTE	POST MILES TOTAL PROJECT	SHEET No.	TOTAL SHEETS
05	Cc				

REGISTERED CIVIL ENGINEER DATE

PLANS APPROVAL DATE

THE STATE OF CALIFORNIA OR ITS OFFICERS OR AGENTS SHALL NOT BE RESPONSIBLE FOR THE ACCURACY OR COMPLETENESS OF SCANNED COPIES OF THIS PLAN SHEET.

REGISTERED PROFESSIONAL ENGINEER CAMERON J. PINKERTON No. 73288 Exp. 12-31-22 CIVIL STATE OF CALIFORNIA

THE REGISTERED CIVIL ENGINEER FOR THE PROJECT IS RESPONSIBLE FOR THE SELECTION AND PROPER APPLICATION OF THE COMPONENT DESIGN AND ANY MODIFICATIONS SHOWN.

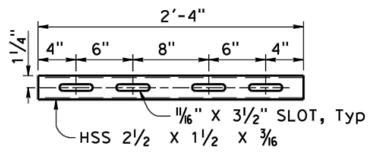

HSS 3 X 2 X 3/16 RAIL

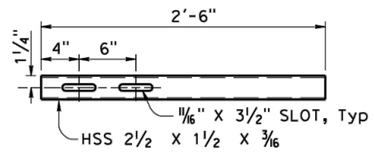

HSS 3 X 2 X 3/16 RAIL

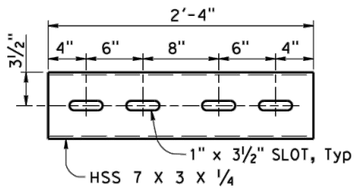

HSS 8 X 4 X 5/16 RAIL

STANDARD SLEEVES DETAILS

NO SCALE

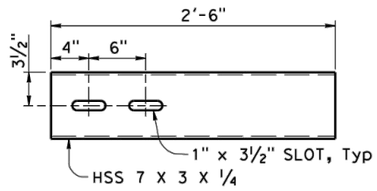

HSS 8 X 4 X 5/16 RAIL

EXPANSION SLEEVES DETAILS

NO SCALE

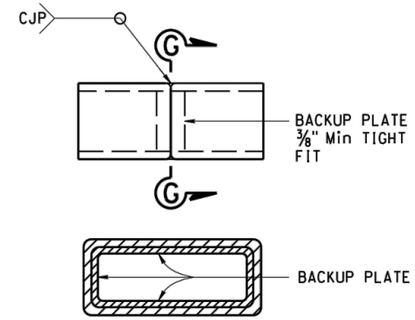

SECTION G-G

ALTERNATE TUBE WELDED STANDARD SPLICE

NO SCALE

NOTES:

1. HS bolts with nut and washers, snug tightened, and thread locking system.
2. Use ½"* X 3 5/16 BOLTS (HSS 3 X 2 X 3/16)
   Use ¾"* X 5 5/16 BOLTS (HSS 8 X 4 X 5/16)
3. Each rail length must be continuous over a minimum of two posts.
4. The fabricator must check that the tubular sleeve splices conform to the dimensions indicated to assure proper clearance.
5. Except for expansion splices, not more than one splice permitted per same side of post.

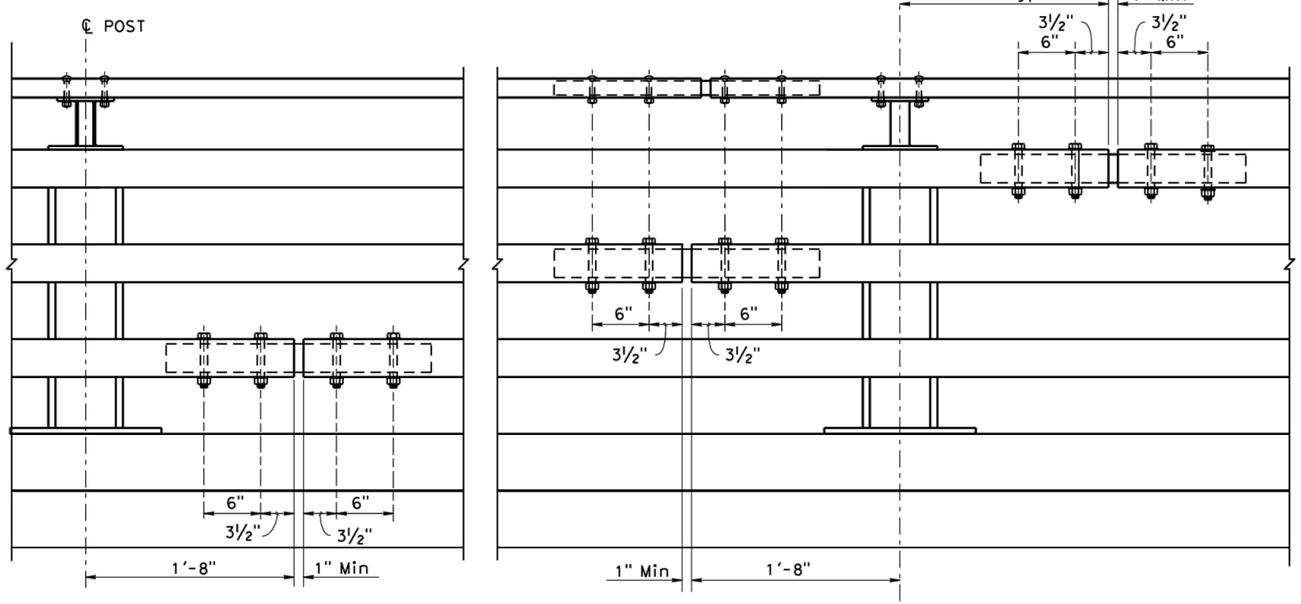

STANDARD SPLICE

NO SCALE

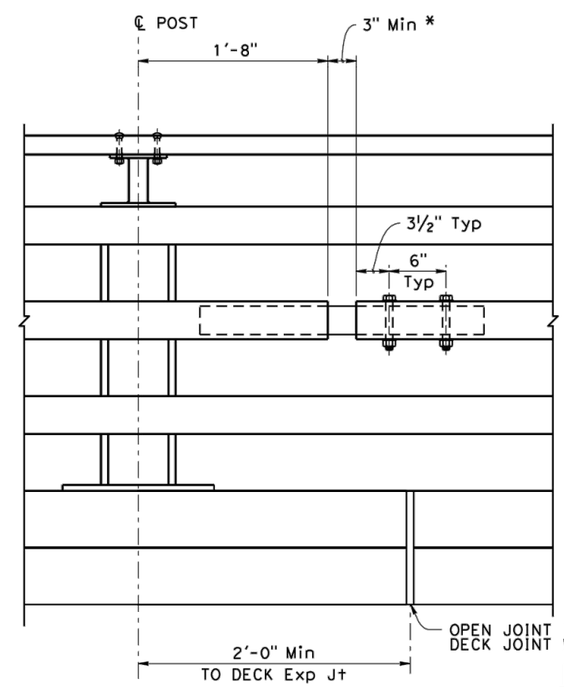

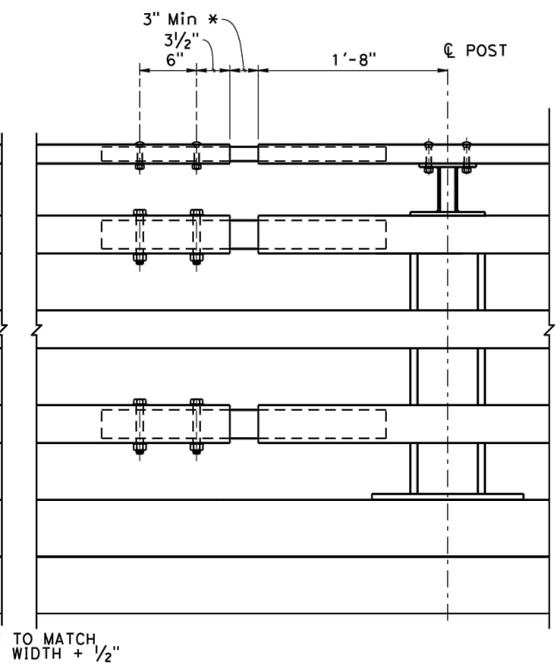

EXPANSION SPLICE

NO SCALE

* MATCH DECK OR WALL JOINT

100% SUBMITTAL
NOT FOR CONSTRUCTION

B-49

BRIDGE STANDARD DETAILS		
xs16-119-4 (FILE NO.)	January 2021 (APPROVAL DATE)	The components of the Bridge Standard Details have been prepared under the responsible charge of the Technical Owner, a registered civil engineer in the State of California

STATE OF CALIFORNIA DEPARTMENT OF TRANSPORTATION

DIVISION OF ENGINEERING SERVICES

BRIDGE No. 36C0108

POST MILE

CALIFORNIA ST-75SW BRIDGE RAIL

DETAILS No.4

Refer to: http://www.dot.ca.gov/hq/esc/techpubs/manual/bridgemanuals/bridge-standard-detail-sheets/index.html

DATE PLOTTED => 8/2/2021 TIME PLOTTED => 9:43:29 AM
FILE => 202101-xs16-119-4.dgn USERNAME => $USER

ORIGINAL SCALE IN INCHES FOR REDUCED PLANS 0 1 2 3

UNIT:
PROJECT NUMBER & PHASE:
CONTRACT No.:

DISREGARD PRINTS BEARING EARLIER REVISION DATES

REVISION DATES: 09-01-20 02-04-21 10-8-20

SHEET 161 OF 167

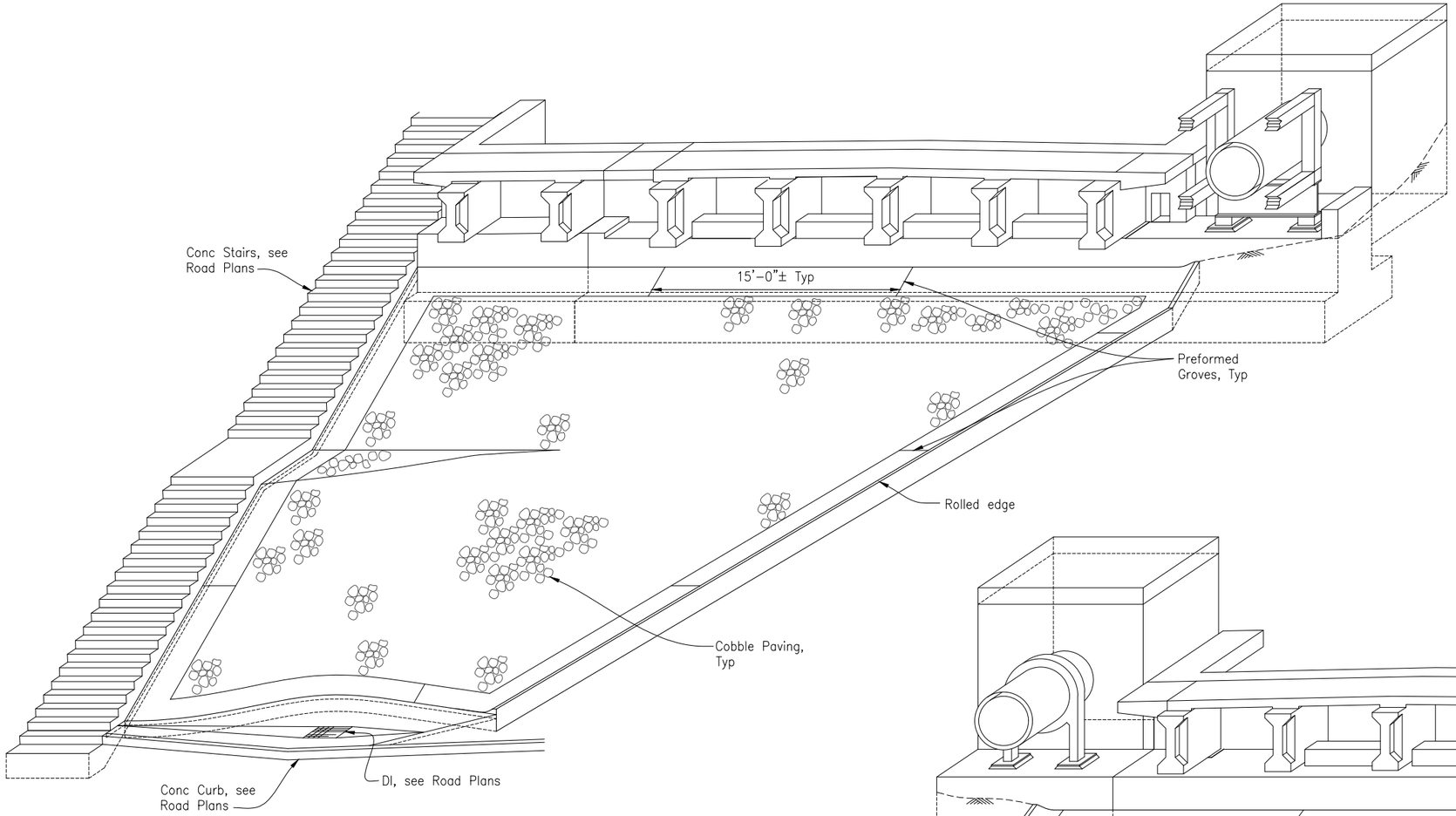

PICTORIAL VIEW OF ABUTMENT 1 INSTALLATION

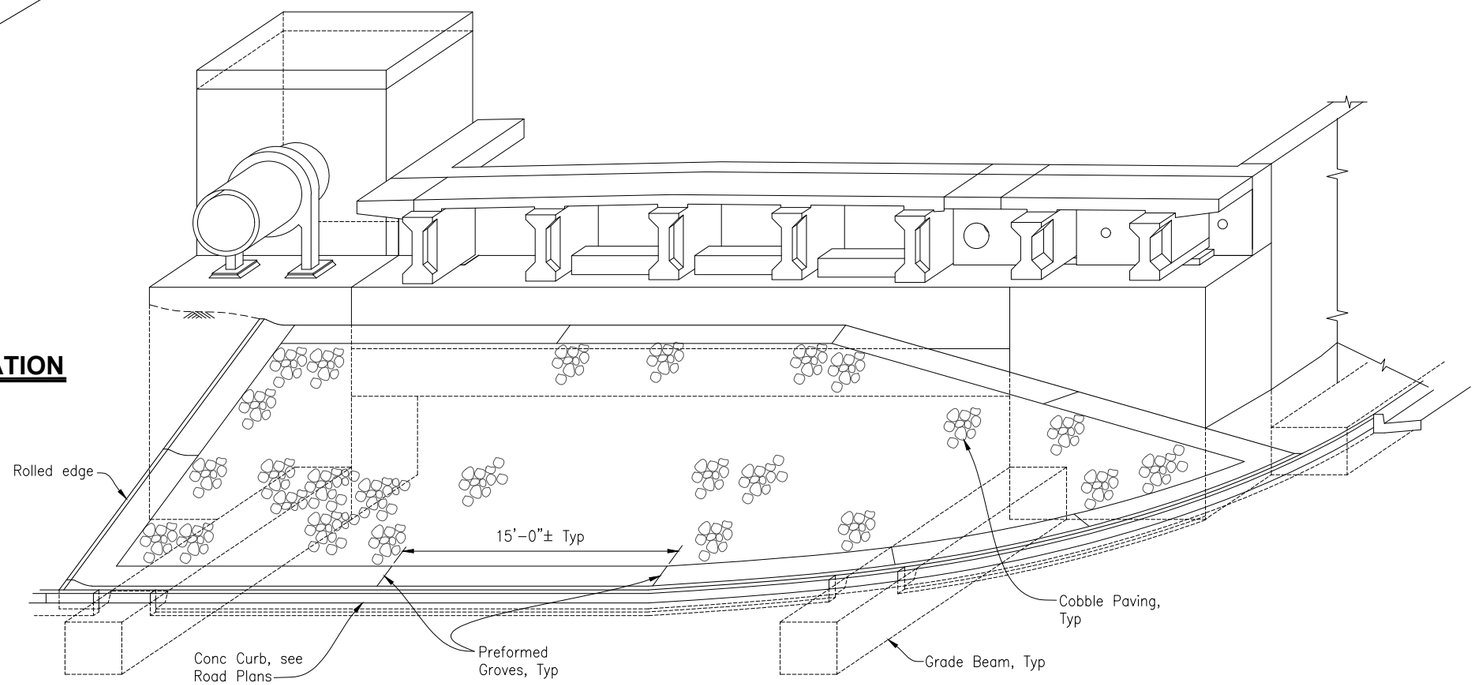

PICTORIAL VIEW OF ABUTMENT 10 INSTALLATION

NOTE:
THE CONTRACTOR SHALL VERIFY ALL CONTROLLING FIELD DIMENSIONS BEFORE ORDERING OR FABRICATING ANY MATERIAL.

100% SUBMITTAL
NOT FOR CONSTRUCTION

B-50

REGISTERED PROFESSIONAL ENGINEER — CAMERON PINKERTON — No. C 63931 — 08-31-22 — CIVIL — STATE OF CALIFORNIA

REGISTERED ENGINEER – CIVIL

TRC Engineers or its officers or agents shall not be responsible for the accuracy or completeness of electronic copies of this plan sheet

CITY OF SANTA CRUZ

PREPARED FOR THE
CITY OF SANTA CRUZ
PUBLIC WORKS DEPARTMENT

DESIGN	BY C. PINKERTON	CHECKED T. LAMBERT
DETAILS	BY G. IMBSEN	CHECKED T. LAMBERT
QUANTITIES	BY C. PINKERTON	CHECKED
ORIGINAL SCALE IN INCHES FOR REDUCED PLANS	0 1 2 3	

TRC
MARK IMBRIANI
PROJECT MANAGER

BRIDGE NO. 36C0108
CONTRACT NO.
EA NO.

MURRAY STREET BRIDGE
SEISMIC RETROFIT AND BARRIER REPLACEMENT
SLOPE PAVING - FULL SLOPE DETAILS NO. 1

DISREGARD PRINTS BEARING EARLIER REVISION DATES → 09-13-13 | 07-01-15 | 08-10-21

REVISION DATES (PRELIMINARY STAGE ONLY)

SCALE AS SHOWN
SHEET 162 OF 167
VAULT NO. XXXXXXX

Drawing name: H:\1161 – Santa Cruz\Murray Street Bridge Seismic Retrofit\050-Slope paving.dwg Layout Tab: Layout1 Aug 27,2021 – 3:00pm ACardoza

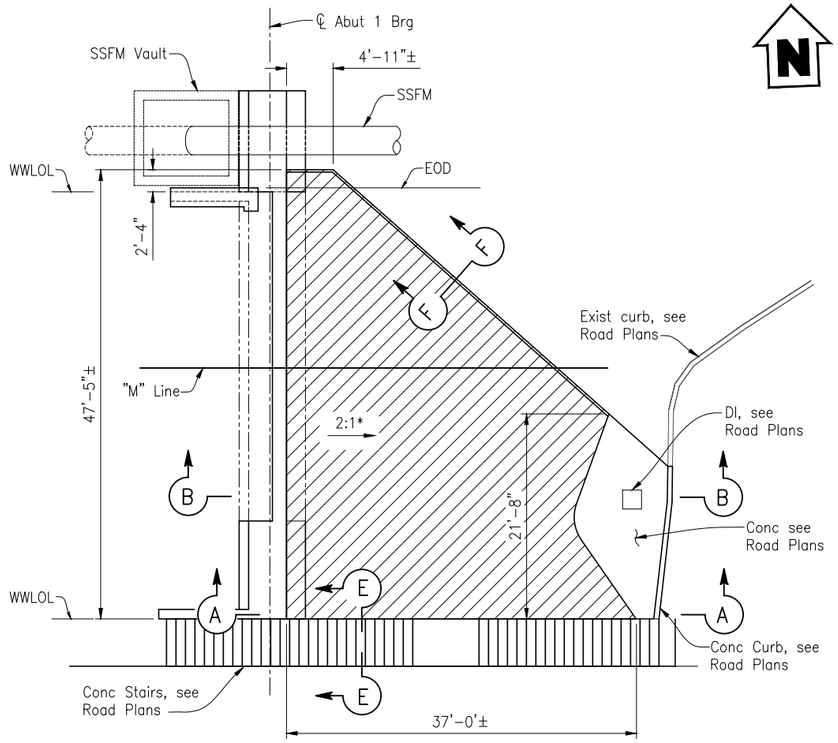

Abut 1 PLAN

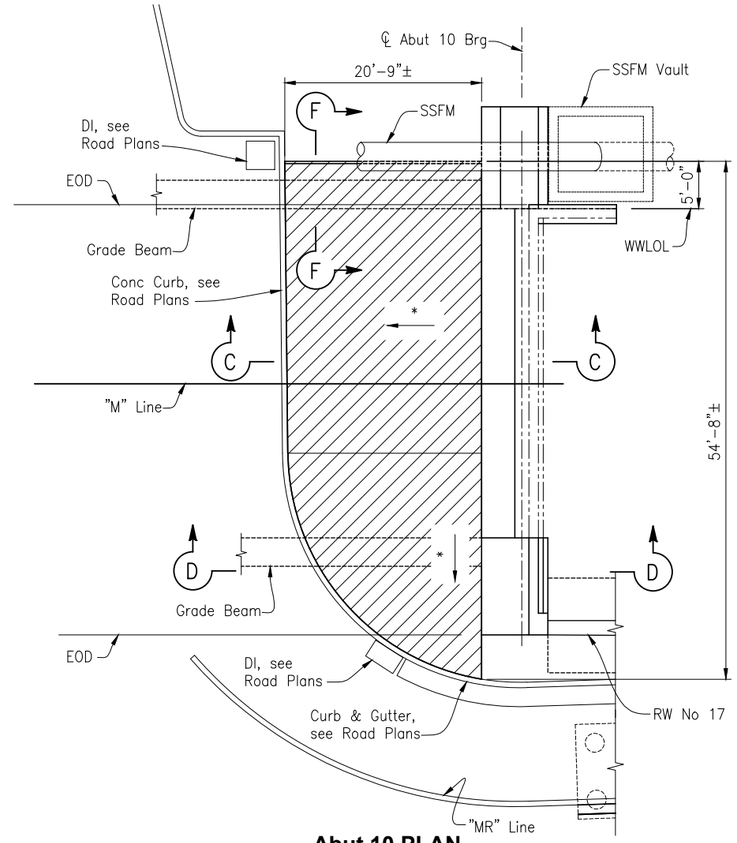

Abut 10 PLAN

* And Varies, see Road Plans for Contours

LIMITS OF SLOPE PAVING LAYOUT

1/8"=1'-0"

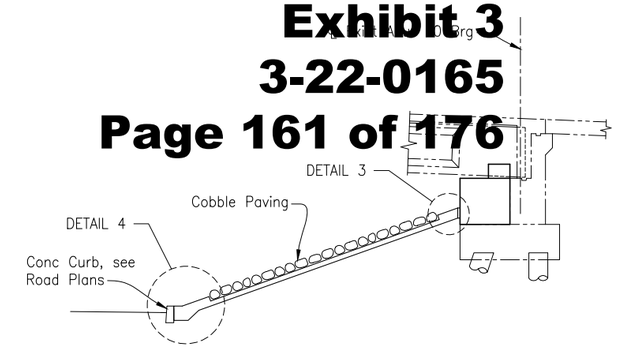

SECTION C-C

3/16"=1'-0"

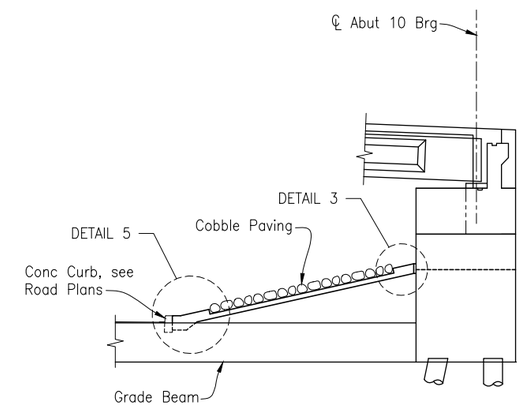

SECTION D-D

3/16"=1'-0"

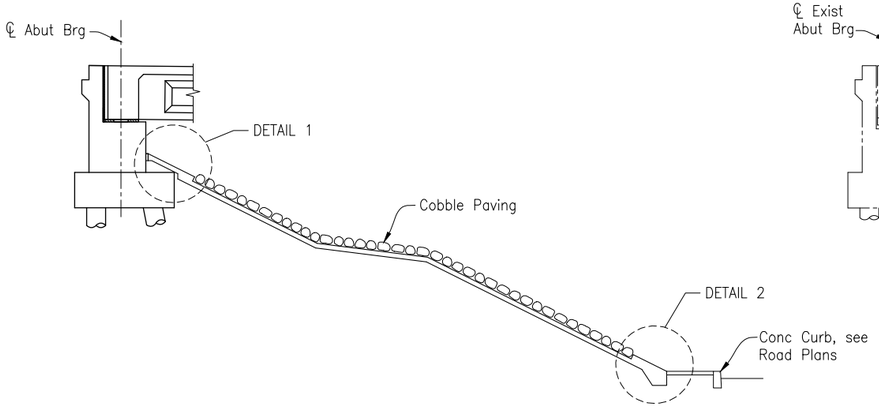

SECTION A-A

3/16"=1'-0"

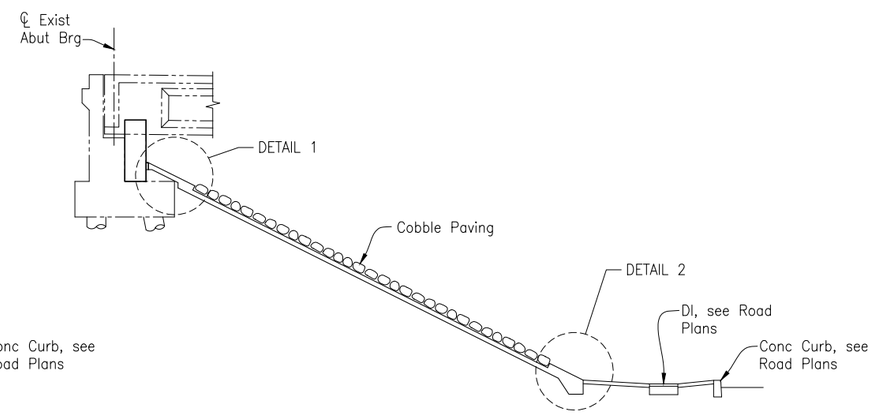

SECTION B-B

3/16"=1'-0"

NOTES:

1. For Details 1 thru 5 and Sections E-E & F-F, see "Slope Paving – Full Slope Details No. 3" sheet.
2. For Preformed Groove details, see "Slope Paving – Full Slope Details No. 3" sheet.

LEGEND:

Indicates Limits of Payment for Slope Paving (Concrete/Cobbles)

NOTE:
THE CONTRACTOR SHALL VERIFY ALL CONTROLLING FIELD DIMENSIONS BEFORE ORDERING OR FABRICATING ANY MATERIAL.

100% SUBMITTAL
NOT FOR CONSTRUCTION

B-51

REGISTERED PROFESSIONAL ENGINEER CAMERON PINKERTON No. 3-31-22 CIVIL STATE OF CALIFORNIA

REGISTERED ENGINEER – CIVIL

TRC Engineers or its officers or agents shall not be responsible for the accuracy or completeness of electronic copies of this plan sheet

CITY OF SANTA CRUZ

PREPARED FOR THE
CITY OF SANTA CRUZ
PUBLIC WORKS DEPARTMENT

DESIGN	BY C. PINKERTON	CHECKED T. LAMBERT
DETAILS	BY G. IMBSEN	CHECKED T. LAMBERT
QUANTITIES	BY C. PINKERTON	CHECKED

ORIGINAL SCALE IN INCHES FOR REDUCED PLANS 0 1 2 3

TRC
MARK IMBRIANI
PROJECT MANAGER

BRIDGE NO. 36C0108
CONTRACT NO.
EA NO.

MURRAY STREET BRIDGE
SEISMIC RETROFIT AND BARRIER REPLACEMENT
SLOPE PAVING - FULL SLOPE DETAILS NO. 2

DISREGARD PRINTS BEARING EARLIER REVISION DATES → 09-13-13 07-01-15 08-09-21

REVISION DATES (PRELIMINARY STAGE ONLY)

SCALE AS SHOWN
SHEET 163 OF 167
VAULT NO. XXXXXXX

Drawing name: H:\1161 – Santa Cruz\Murray Street Bridge Seismic Retrofit\051-Slope paving02.dwg Layout Tab: Layout1 Aug 27,2021 – 3:00pm ACardoza

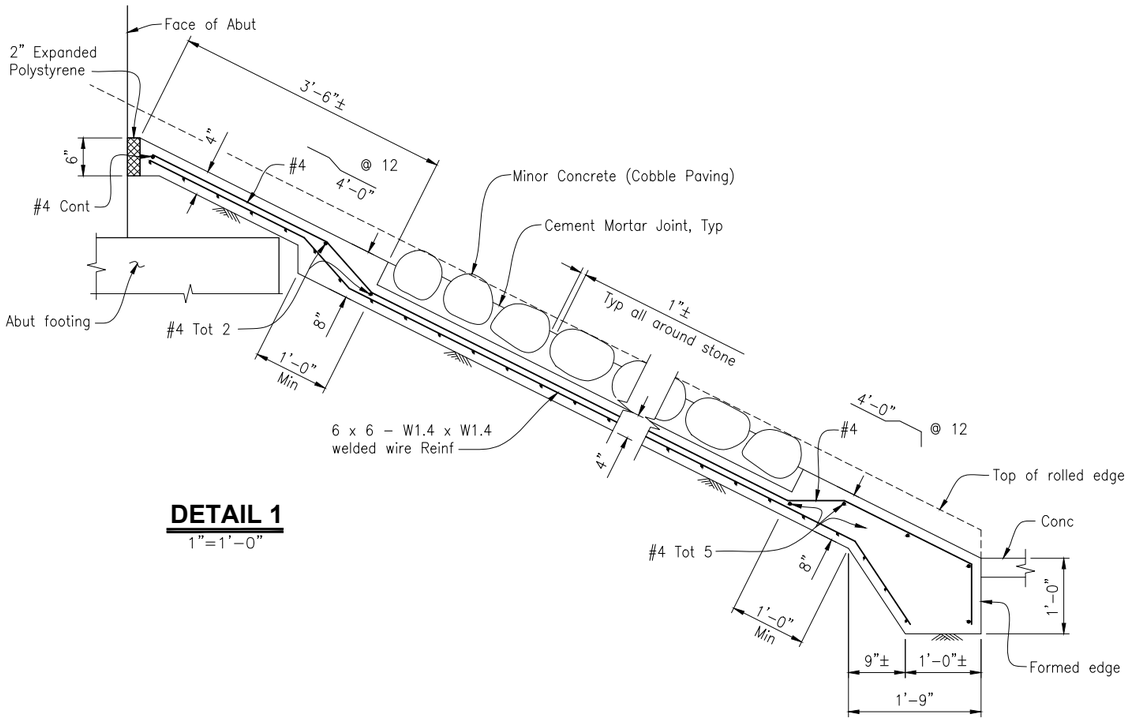

DETAIL 1
1"=1'-0"

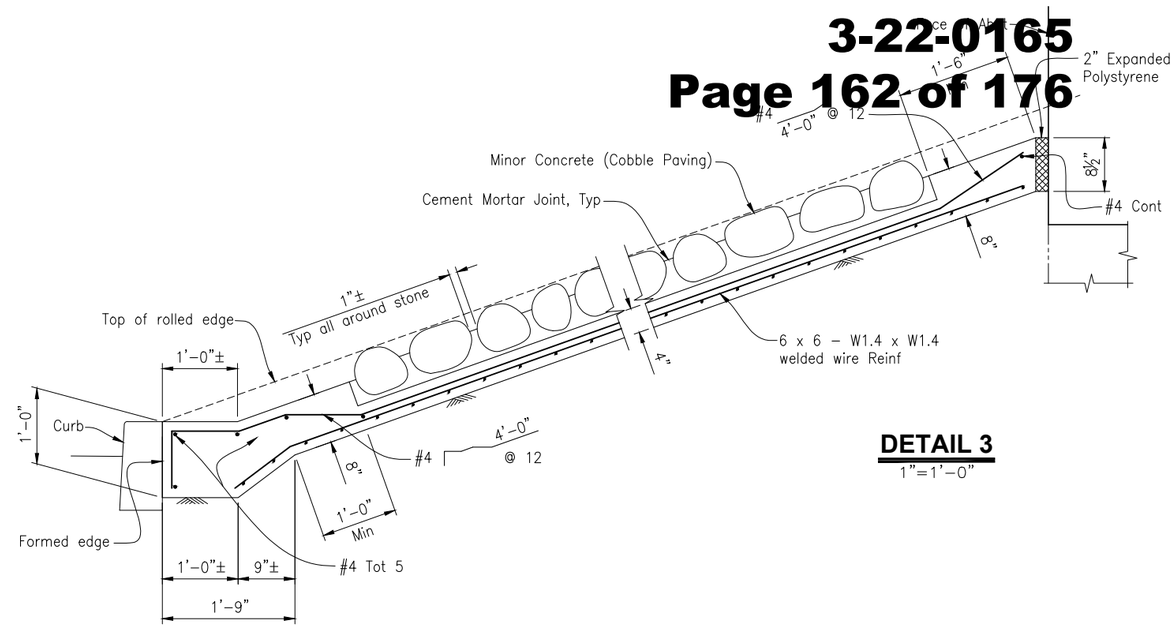

DETAIL 3
1"=1'-0"

DETAIL 4
1"=1'-0"

DETAIL 2
1"=1'-0"

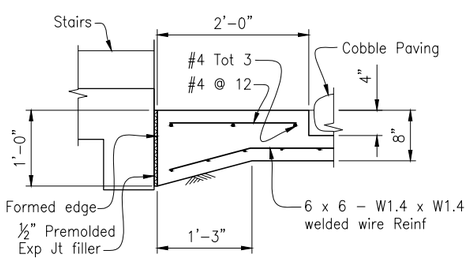

SECTION E-E
1"=1'-0"

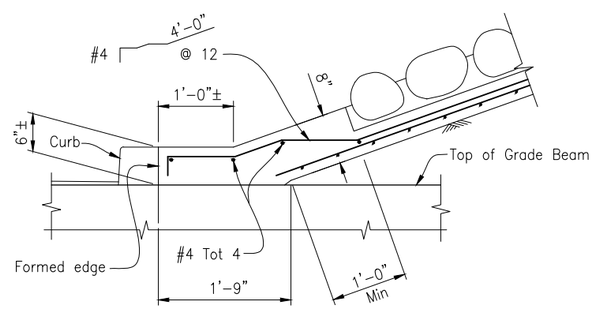

DETAIL 5
1"=1'-0"

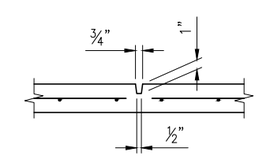

PREFORMED GROOVE
1 1/2"=1'-0"

NOTE:
THE CONTRACTOR SHALL VERIFY ALL CONTROLLING FIELD DIMENSIONS BEFORE ORDERING OR FABRICATING ANY MATERIAL.

100% SUBMITTAL
NOT FOR CONSTRUCTION

REGISTERED PROFESSIONAL ENGINEER — CAMERON PINKERTON — No. [illegible] — Exp. 31-22 — CIVIL — STATE OF CALIFORNIA

REGISTERED ENGINEER – CIVIL

TRC Engineers or its officers or agents shall not be responsible for the accuracy or completeness of electronic copies of this plan sheet

CITY OF SANTA CRUZ

PREPARED FOR THE
CITY OF SANTA CRUZ
PUBLIC WORKS DEPARTMENT

	BY	CHECKED
DESIGN	C. PINKERTON	T. LAMBERT
DETAILS	G. IMBSEN	T. LAMBERT
QUANTITIES	C. PINKERTON	

ORIGINAL SCALE IN INCHES FOR REDUCED PLANS 0 1 2 3

TRC
MARK IMBRIANI
PROJECT MANAGER

BRIDGE NO. 36C0108
CONTRACT NO.
EA NO.

MURRAY STREET BRIDGE
SEISMIC RETROFIT AND BARRIER REPLACEMENT
SLOPE PAVING - FULL SLOPE DETAILS NO. 3

DISREGARD PRINTS BEARING EARLIER REVISION DATES → 08-13-13 | 07-01-15 | 08-09-21
REVISION DATES (PRELIMINARY STAGE ONLY)

SCALE AS SHOWN
SHEET 164 OF 167
VAULT NO. XXXXXXX

Drawing name: H:\1161 – Santa Cruz\Murray Street Bridge Seismic Retrofit\052-Slope paving03.dwg Layout Tab: Layout1 Aug 27,2021 – 3:01pm Acardoza

DIST.	COUNTY	ROUTE	POST MILES TOTAL PROJECT	SHEET NO.	TOTAL SHEETS
05				?	?

Exhibit 3

3-22-0165

REGISTERED GEOLOGIST WILLIAM E. NICHOLS No. 2229 CERTIFIED ENGINEERING GEOLOGIST STATE OF CALIFORNIA

LOGGED BY: G. WADE PROOFREAD BY: A. KAHN
TABER CONSULTANTS
3911 West Capitol Avenue
West Sacramento, CA 95691-2116
(916) 371-1690

JOB No. 2009-272-2 LOCATION: 36122-H1:186N;006W

TRC Companies, Inc.
10680 White Rock Road
Rancho Cordova, CA 95670
(916) 366-0632

NOTES:

1. Field classification of soils was in accordance with ASTM D 2488-09a "Description and Identification of Soils (Visual-Manual Procedure)".

2. For 2013 and 2015 borings Standard Penetration tests (SPTs) were performed in accordance with ASTM D 1586-11 using hammer operated with an automated drop system. Drill rods were 1 5/8-inch diameter "A"-rods; sampler was driven with brass liners. SPT hammer energy ratio (ETR) measurements indicate an ETR=87% as of 4/09/2012 (2013 borings); ETR= 104% (2015 borings).

3. The length of each sampled interval is shown graphically on the boring log. Whole number blow counts ("N") represent the "standard penetration resistance" interval in accordance with ASTM D1586-11. Where less than 1 foot of penetration is achieved, the blow count shown is for that fraction of the "standard penetration resistance" interval actually penetrated. Where indicated by an asterisk (*) the number of blows shown is for only that fraction of the initial 0.5 ft "seating drive" interval penetration. Material characteristics shown in ( ) where estimated.

4. Rock classification according to Bureau of Reclamation, U.S. Department of the Interior (USBR), "Engineering Geology Field Manual", and "Manual of Field Geology", (Compton, Robert R.). USBR field descriptor sheet is attached. Rock Quality Designation (RQD), Weathering, Rock Hardness/Strength, Bedding, and Fracture Density, as shown on this sheet, were used to describe all rock core from borings B-8, B-9, B-10, B-11, B-13 and B-15, drilled in 2013. Descriptors were determined in the field. REC = Core Recovered (percent). RQD = Rock Quality Designation (percent).

5. Groundwater surface elevations in the borings indicated on the "Log of Test Borings" sheets reflect the fluid level in the borings on the specified date. Groundwater surface elevations are subject to seasonal fluctuations and may occur at higher or lower elevations depending on the conditions at any particular time.

6. All CPTs were advanced per ASTM D 5778 procedures. Cones used for CPTs were Vertek 1.4 in diameter (10 cm2) pushed from a 20-ton rig or from a CME 55 Track Mounted rig (using auger anchors to provide a 20-ton reaction), respectively.

7. Probes were conducted in the channel by manually pushing a ¼-inch steel probe through the alluvium until essential "refusal" was realized.

8. Approximate boring elevations were surveyed by Taber Consultants in the field at the time of subsurface exploration and correlated to topographic survey provided by TRC. Boring B-8 thru 16 elevation was estimated based on topography provided by TRC.

9. Electronic media for plan view provided by TRC.

10. Ground line profile is estimated from topography provided by TRC.

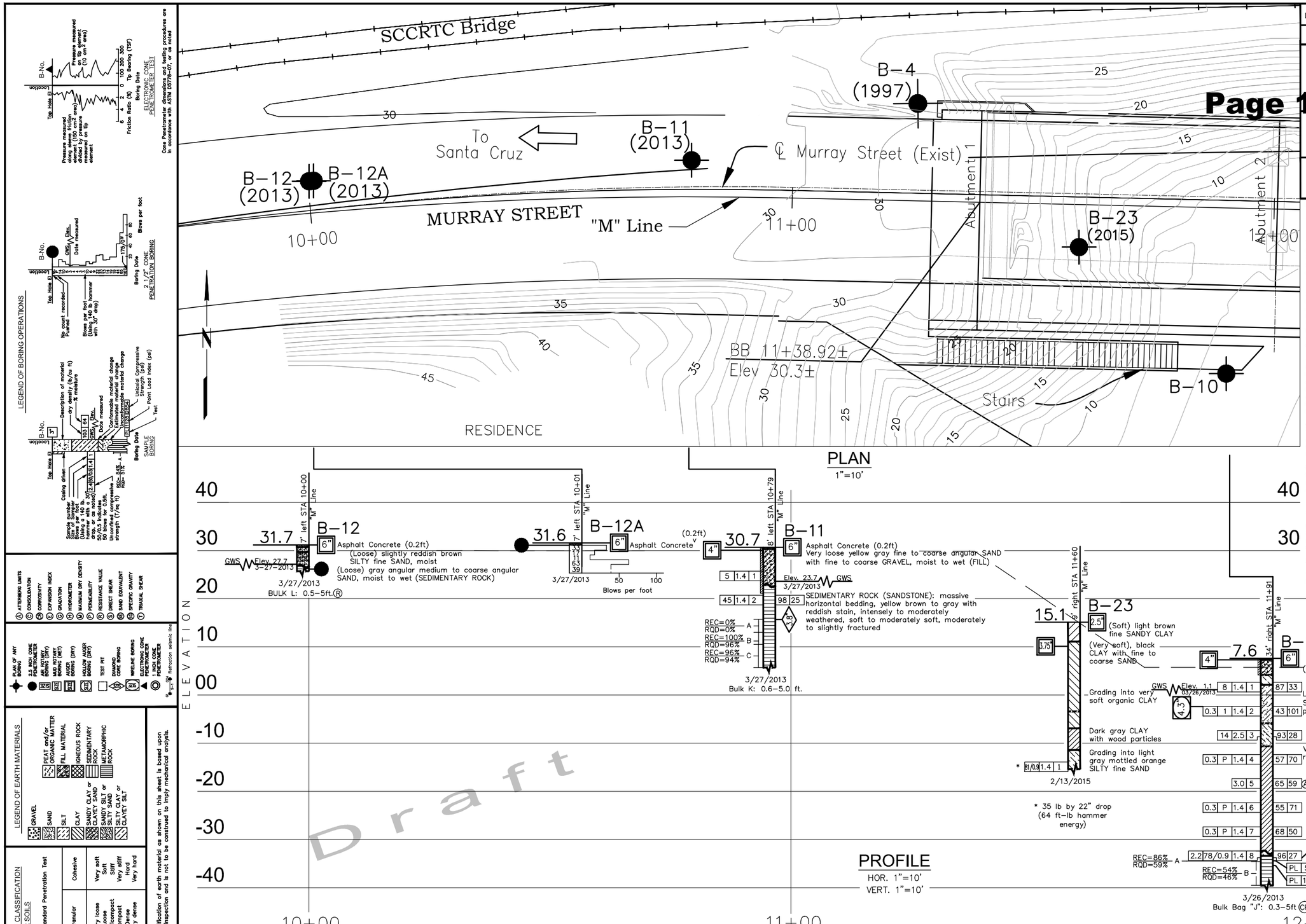

LEGEND OF BORING OPERATIONS

LEGEND OF EARTH MATERIALS: GRAVEL, SAND, SILT, CLAY, SANDY CLAY or CLAYEY SAND, SANDY SILT or SILTY SAND, SILTY CLAY or CLAYEY SILT, PEAT and/or ORGANIC MATTER, FILL MATERIAL, IGNEOUS ROCK, SEDIMENTARY ROCK, METAMORPHIC ROCK

CONSISTENCY CLASSIFICATION FOR SOILS

According to the Standard Penetration Test	Cohesive	Granular
Standard Penetration "N"-Value	Very soft / Soft / Stiff / Very stiff / Hard / Very hard	Very loose / Loose / Semicompact / Compact / Dense / Very dense
0-5	Very soft	Very loose
6-10	Soft	Loose
11-20	Stiff	Semicompact
21-35	Very stiff	Compact
36-70	Hard	Dense
>70	Very hard	Very dense

NOTE: Classification of earth material as shown on this sheet is based upon field inspection and is not to be construed to imply mechanical analysis.

DESIGN OVERSIGHT	DRAWN BY	X. Vang	G. Wade, P.G., A. Kahn FIELD INVESTIGATOR	PREPARED FOR CITY OF SANTA CRUZ DEPARTMENT OF PUBLIC WORKS	PROJECT ENGINEER	EXIS. BRIDGE NO. 36C-0108	Murray Street Bridge at Woods Lagoon
SIGN OFF DATE	CHECKED BY	A. Kahn	DATE Mar. 2013, Feb. 2015			POST MILE	**LOG OF TEST BORINGS No. 1 of 7**

DIST.	COUNTY	ROUTE	POST MILES TOTAL PROJECT	SHEET NO.	TOTAL SHEETS
05	SCR			?	?

Exhibit 3
3-22-0165
Page 164 of 176

REGISTERED GEOLOGIST
WILLIAM E. NICHOLS
No. 2229
CERTIFIED ENGINEERING GEOLOGIST
STATE OF CALIFORNIA

TABER CONSULTANTS
3911 West Capitol Avenue
West Sacramento, CA 95691-2116
(916) 371-1690
JOB No. 2009-272-2 LOCATION: 36122-H1:186N;006W

TRC Companies, Inc.
10680 White Rock Road
Rancho Cordova, CA 95670
(916) 366-0632

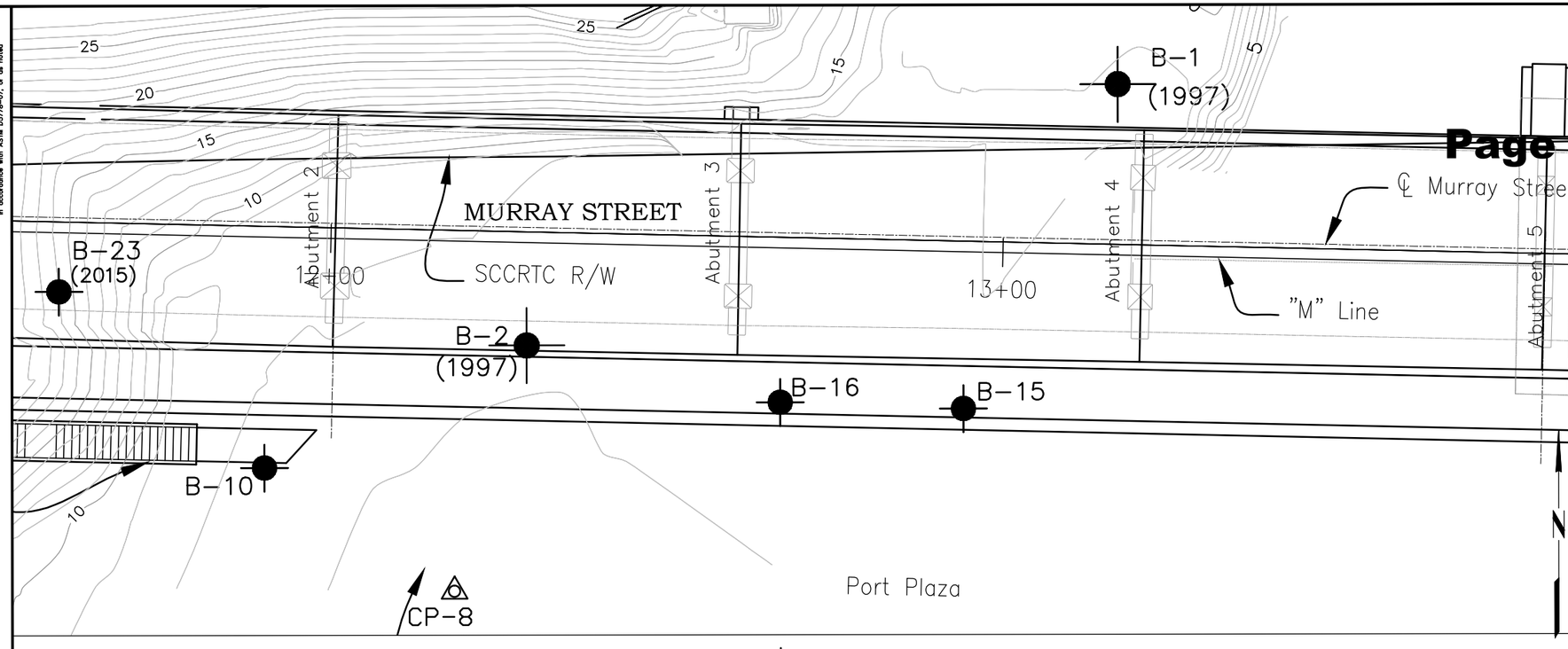

PLAN
1"=10'

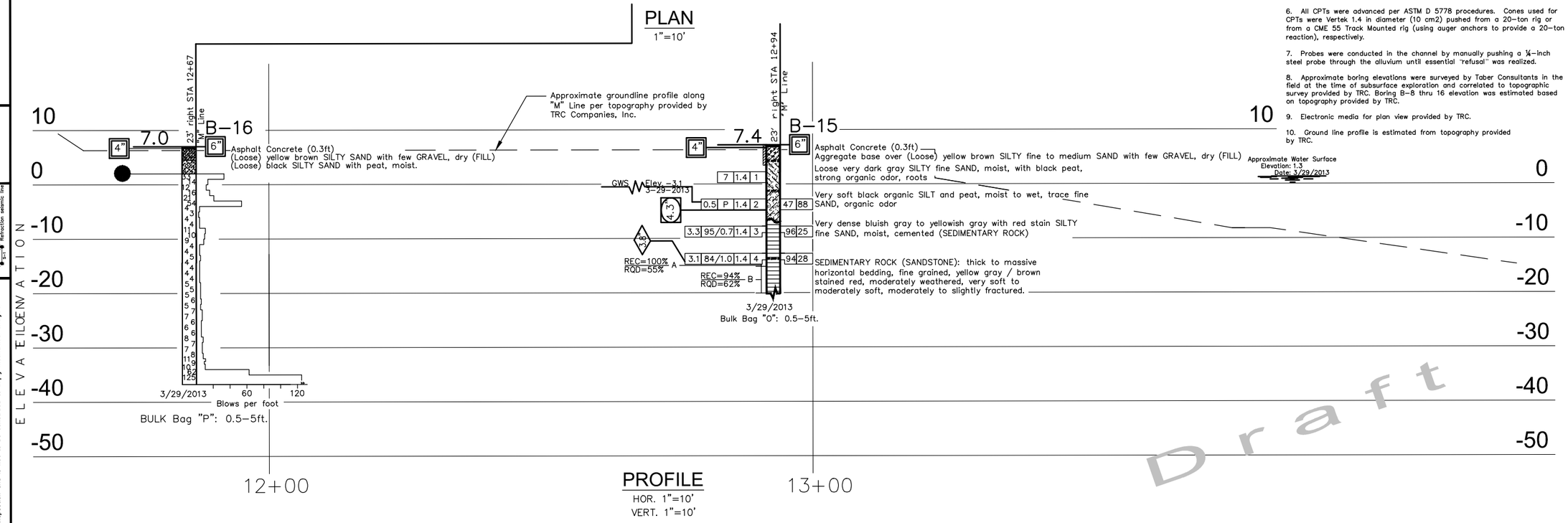

PROFILE
HOR. 1"=10'
VERT. 1"=10'

NOTES:

1. Field classification of soils was in accordance with ASTM D 2488-09a "Description and Identification of Soils (Visual-Manual Procedure)".

2. For 2013 and 2015 borings Standard Penetration tests (SPTs) were performed in accordance with ASTM D 1586-11 using hammer operated with an automated drop system. Drill rods were 1 5/8-inch diameter "A"-rods; sampler was driven with brass liners. SPT hammer energy ratio (ETR) measurements indicate an ETR=87% as of 4/09/2012 (2013 borings); ETR= 104% (2015 borings).

3. The length of each sampled interval is shown graphically on the boring log. Whole number blow counts ("N") represent the "standard penetration resistance" interval in accordance with ASTM D1586-11. Where less than 1 foot of penetration is achieved, the blow count shown is for that fraction of the "standard penetration resistance" interval actually penetrated. Where indicated by an asterisk (*) the number of blows shown is for only that fraction of the initial 0.5 ft "seating drive" interval penetration. Material characteristics shown in ( ) where estimated.

4. Rock classification according to Bureau of Reclamation, U.S. Department of the Interior (USBR), "Engineering Geology Field Manual", and "Manual of Field Geology", (Compton, Robert R.). USBR field descriptor sheet is attached. Rock Quality Designation (RQD), Weathering, Rock Hardness/Strength, Bedding, and Fracture Density, as shown on this sheet, were used to describe all rock core from borings B-8, B-9, B-10, B-11, B-13 and B-15, drilled in 2013. Descriptors were determined in the field. REC = Core Recovered (percent). RQD = Rock Quality Designation (percent).

5. Groundwater surface elevations in the borings indicated on the "Log of Test Borings" sheets reflect the fluid level in the borings on the specified date. Groundwater surface elevations are subject to seasonal fluctuations and may occur at higher or lower elevations depending on the conditions at any particular time.

6. All CPTs were advanced per ASTM D 5778 procedures. Cones used for CPTs were Vertek 1.4 in diameter (10 cm2) pushed from a 20-ton rig or from a CME 55 Track Mounted rig (using auger anchors to provide a 20-ton reaction), respectively.

7. Probes were conducted in the channel by manually pushing a ¼-inch steel probe through the alluvium until essential "refusal" was realized.

8. Approximate boring elevations were surveyed by Taber Consultants in the field at the time of subsurface exploration and correlated to topographic survey provided by TRC. Boring B-8 thru 16 elevation was estimated based on topography provided by TRC.

9. Electronic media for plan view provided by TRC.

10. Ground line profile is estimated from topography provided by TRC.

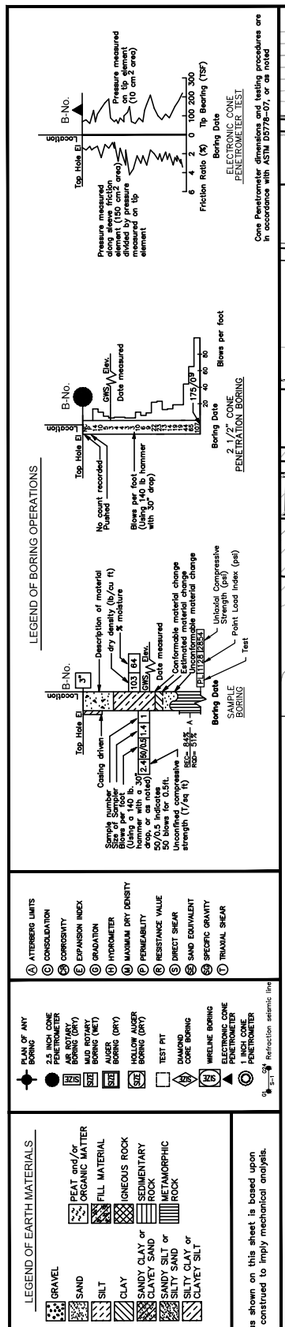

CONSISTENCY CLASSIFICATION FOR SOILS

According to the Standard Penetration Test

Standard Penetration "N"-Value	Granular	Cohesive
0-5	Very loose	Very soft
6-10	Loose	Soft
11-20	Semicompact	Stiff
21-35	Compact	Very stiff
36-70	Dense	Hard
>70	Very dense	Very hard

NOTE: Classification of earth material as shown on this sheet is based upon field inspection and is not to be construed to imply mechanical analysis.

DESIGN OVERSIGHT	DRAWN BY X. Vang	G. Wade, P.G. FIELD INVESTIGATOR	PREPARED FOR CITY OF SANTA CRUZ DEPARTMENT OF PUBLIC WORKS
SIGN OFF DATE	CHECKED BY A. Kahn	DATE Mar. 2013	PROJECT ENGINEER

EXIS. BRIDGE NO. 36C-0108
POST MILE

Murray Street Bridge at Woods Lagoon

LOG OF TEST BORINGS No. 2 of 7

9/28/2015 2009-0272-2 LOTB Bridge.dwg

ORIGINAL SCALE IN INCHES FOR REDUCED PLANS 0 1 2 3

CU
EA

DISREGARD PRINTS BEARING EARLIER REVISION DATES

REVISION DATES (PRELIMINARY STAGE ONLY) SHEET ? OF ?

Draft

DIST.	COUNTY	ROUTE	POST MILES TOTAL PROJECT	SHEET NO.	TOTAL SHEETS
05	SCR	1	0.0/1.1	?	?

Exhibit 3

3-22-0165

Page 165 of 176

REGISTERED GEOLOGIST WILLIAM E. NICHOLS No. 2229 CERTIFIED ENGINEERING GEOLOGIST STATE OF CALIFORNIA

TABER CONSULTANTS
3911 West Capitol Avenue
West Sacramento, CA 95691-2116
(916) 371-1690
JOB No. 2009-272-2 LOCATION: 36122-H1:186N;006W

TRC Companies, Inc.
10680 White Rock Road
Rancho Cordova, CA 95670
(916) 366-0632

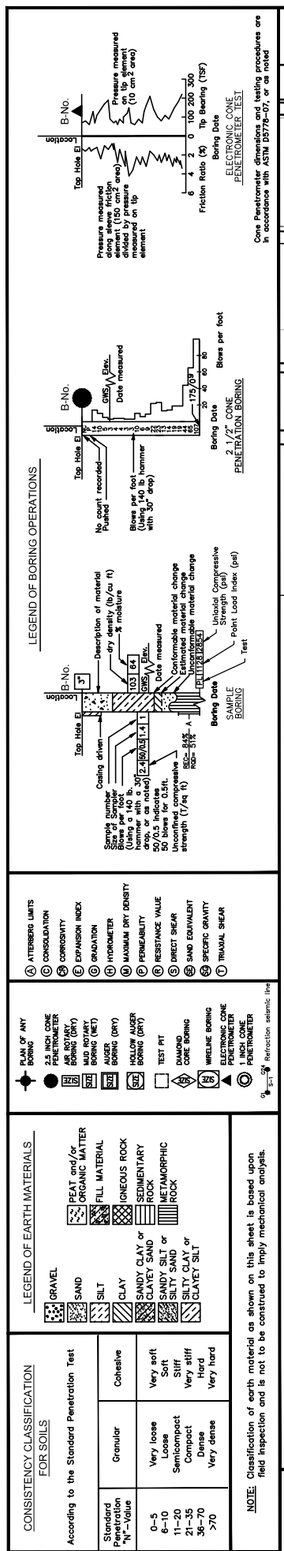

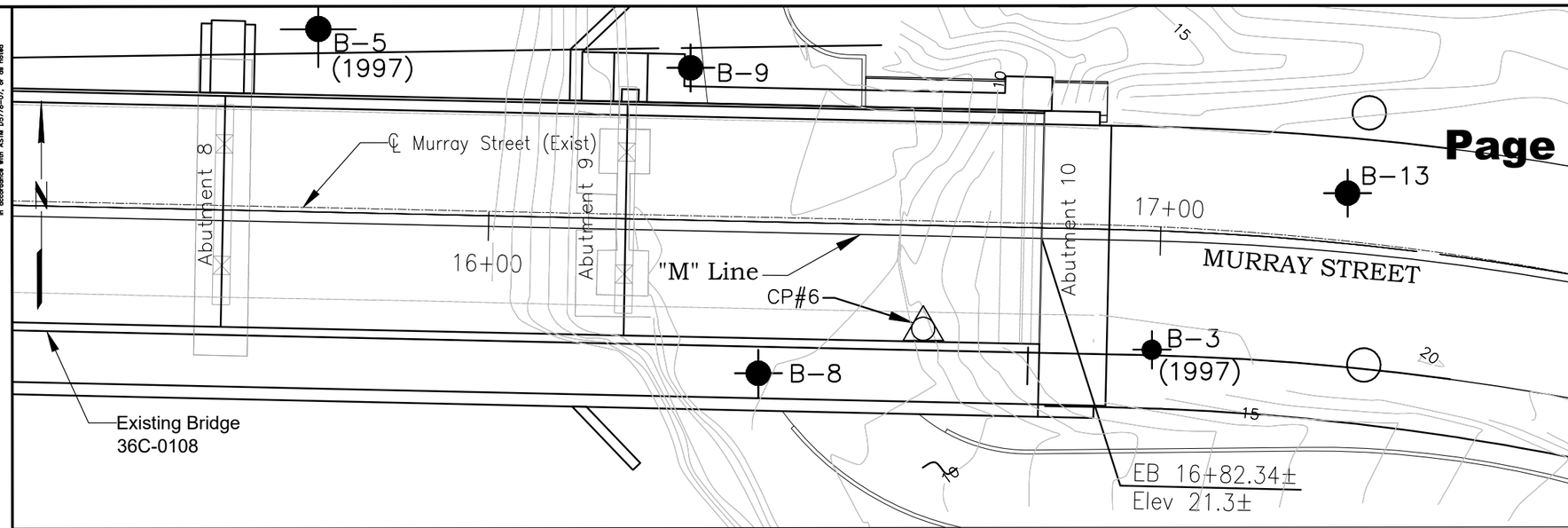

PLAN

1"=10'

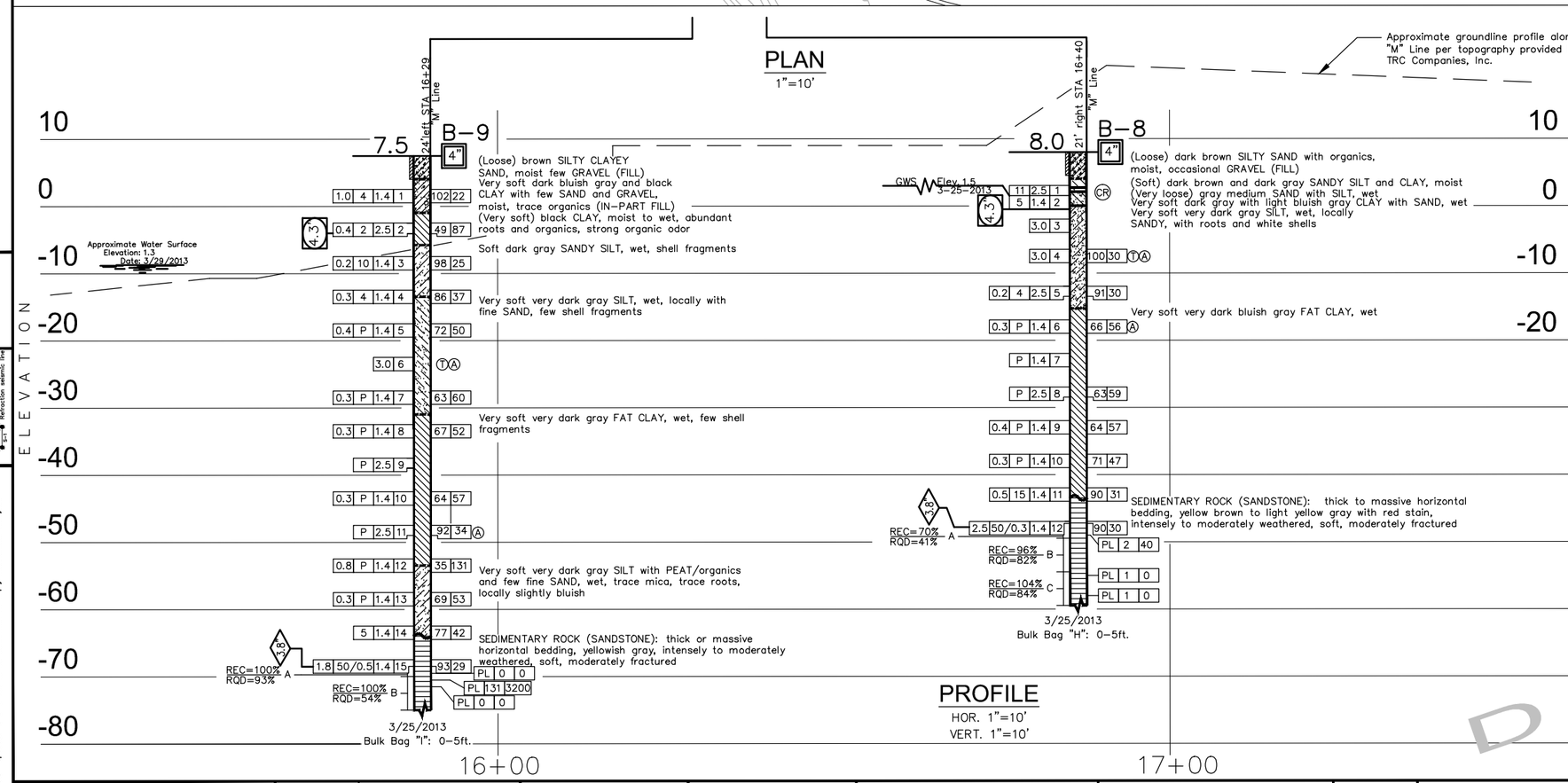

PROFILE

HOR. 1"=10'
VERT. 1"=10'

NOTES:

1. Field classification of soils was in accordance with ASTM D 2488-09a "Description and Identification of Soils (Visual-Manual Procedure)".

2. For 2013 and 2015 borings Standard Penetration tests (SPTs) were performed in accordance with ASTM D 1586-11 using hammer operated with an automated drop system. Drill rods were 1 5/8-inch diameter "A"-rods; sampler was driven with brass liners. SPT hammer energy ratio (ETR) measurements indicate an ETR=87% as of 4/09/2012 (2013 borings); ETR= 104% (2015 borings).

3. The length of each sampled interval is shown graphically on the boring log. Whole number blow counts ("N") represent the "standard penetration resistance" interval in accordance with ASTM D1586-11. Where less than 1 foot of penetration is achieved, the blow count shown is for that fraction of the "standard penetration resistance" interval actually penetrated. Where indicated by an asterisk (*) the number of blows shown is for only that fraction of the initial 0.5 ft "seating drive" interval penetration. Material characteristics shown in ( ) where estimated.

4. Rock classification according to Bureau of Reclamation, U.S. Department of the Interior (USBR), "Engineering Geology Field Manual", and "Manual of Field Geology", (Compton, Robert R.). USBR field descriptor sheet is attached. Rock Quality Designation (RQD), Weathering, Rock Hardness/Strength, Bedding, and Fracture Density, as shown on this sheet, were used to describe all rock core from borings B-8, B-9, B-10, B-11, B-13 and B-15, drilled in 2013. Descriptors were determined in the field. REC = Core Recovered (percent). RQD = Rock Quality Designation (percent).

5. Groundwater surface elevations in the borings indicated on the "Log of Test Borings" sheets reflect the fluid level in the borings on the specified date. Groundwater surface elevations are subject to seasonal fluctuations and may occur at higher or lower elevations depending on the conditions at any particular time.

6. All CPTs were advanced per ASTM D 5778 procedures. Cones used for CPTs were Vertek 1.4 in diameter (10 cm2) pushed from a 20-ton rig or from a CME 55 Track Mounted rig (using auger anchors to provide a 20-ton reaction), respectively.

7. Probes were conducted in the channel by manually pushing a ¼-inch steel probe through the alluvium until essential "refusal" was realized.

8. Approximate boring elevations were surveyed by Taber Consultants in the field at the time of subsurface exploration and correlated to topographic survey provided by TRC. Boring B-8 thru 16 elevation was estimated based on topography provided by TRC.

9. Electronic media for plan view provided by TRC.

10. Ground line profile is estimated from topography provided by TRC.

Draft

DESIGN OVERSIGHT	DRAWN BY X. Vang	G. Wade, P.G. FIELD INVESTIGATOR	PREPARED FOR CITY OF SANTA CRUZ DEPARTMENT OF PUBLIC WORKS	PROJECT ENGINEER
SIGN OFF DATE	CHECKED BY A. Kahn	DATE Mar. 2013		

EXIS. BRIDGE NO. 36C-0108
POST MILE

Murray Street Bridge at Woods Lagoon

LOG OF TEST BORINGS No. 3 of 7

9/29/2015 2009-0272-2 LOTB Bridge.dwg

ORIGINAL SCALE IN INCHES FOR REDUCED PLANS 0 1 2 3

CU
EA

DISREGARD PRINTS BEARING EARLIER REVISION DATES

REVISION DATES (PRELIMINARY STAGE ONLY) SHEET ? OF ?

DIST.	COUNTY	ROUTE	POST MILES TOTAL PROJECT	SHEET NO.	TOTAL SHEETS
05				?	?

Exhibit 3

3-22-0165

Page 166 of 176

REGISTERED GEOLOGIST WILLIAM E. NICHOLS No. 2229 CERTIFIED ENGINEERING GEOLOGIST STATE OF CALIFORNIA

TABER CONSULTANTS
3911 West Capitol Avenue
West Sacramento, CA 95691-2116
(916) 371-1690

JOB No. 2009-272-2 LOCATION: 36122-H1:186N;006W

TRC Companies, Inc.
10680 White Rock Road
Rancho Cordova, CA 95670
(916) 366-0632

NOTES:

1. Field classification of soils was in accordance with ASTM D 2488-09a "Description and Identification of Soils (Visual-Manual Procedure)".

2. For 2013 and 2015 borings Standard Penetration tests (SPTs) were performed in accordance with ASTM D 1586-11 using hammer operated with an automated drop system. Drill rods were 1 5/8-inch diameter "A"-rods; sampler was driven with brass liners. SPT hammer energy ratio (ETR) measurements indicate an ETR=87% as of 4/09/2012 (2013 borings); ETR= 104% (2015 borings).

3. The length of each sampled interval is shown graphically on the boring log. Whole number blow counts ("N") represent the "standard penetration resistance" interval in accordance with ASTM D1586-11. Where less than 1 foot of penetration is achieved, the blow count shown is for that fraction of the "standard penetration resistance" interval actually penetrated. Where indicated by an asterisk (*) the number of blows shown is for only that fraction of the initial 0.5 ft "seating drive" interval penetration. Material characteristics shown in ( ) where estimated.

4. Rock classification according to Bureau of Reclamation, U.S. Department of the Interior (USBR), "Engineering Geology Field Manual", and "Manual of Field Geology", (Compton, Robert R.). USBR field descriptor sheet is attached. Rock Quality Designation (RQD), Weathering, Rock Hardness/Strength, Bedding, and Fracture Density, as shown on this sheet, were used to describe all rock core from borings B-8, B-9, B-10, B-11, B-13 and B-15, drilled in 2013. Descriptors were determined in the field. REC = Core Recovered (percent). RQD = Rock Quality Designation (percent).

5. Groundwater surface elevations in the borings indicated on the "Log of Test Borings" sheets reflect the fluid level in the borings on the specified date. Groundwater surface elevations are subject to seasonal fluctuations and may occur at higher or lower elevations depending on the conditions at any particular time.

6. All CPTs were advanced per ASTM D 5778 procedures. Cones used for CPTs were Vertek 1.4 in diameter (10 cm2) pushed from a 20-ton rig or from a CME 55 Track Mounted rig (using auger anchors to provide a 20-ton reaction), respectively.

7. Probes were conducted in the channel by manually pushing a ¼-inch steel probe through the alluvium until essential "refusal" was realized.

8. Approximate boring elevations were surveyed by Taber Consultants in the field at the time of subsurface exploration and correlated to topographic survey provided by TRC. Boring B-8 thru 16 elevation was estimated based on topography provided by TRC.

9. Electronic media for plan view provided by TRC.

10. Ground line profile is estimated from topography provided by TRC.

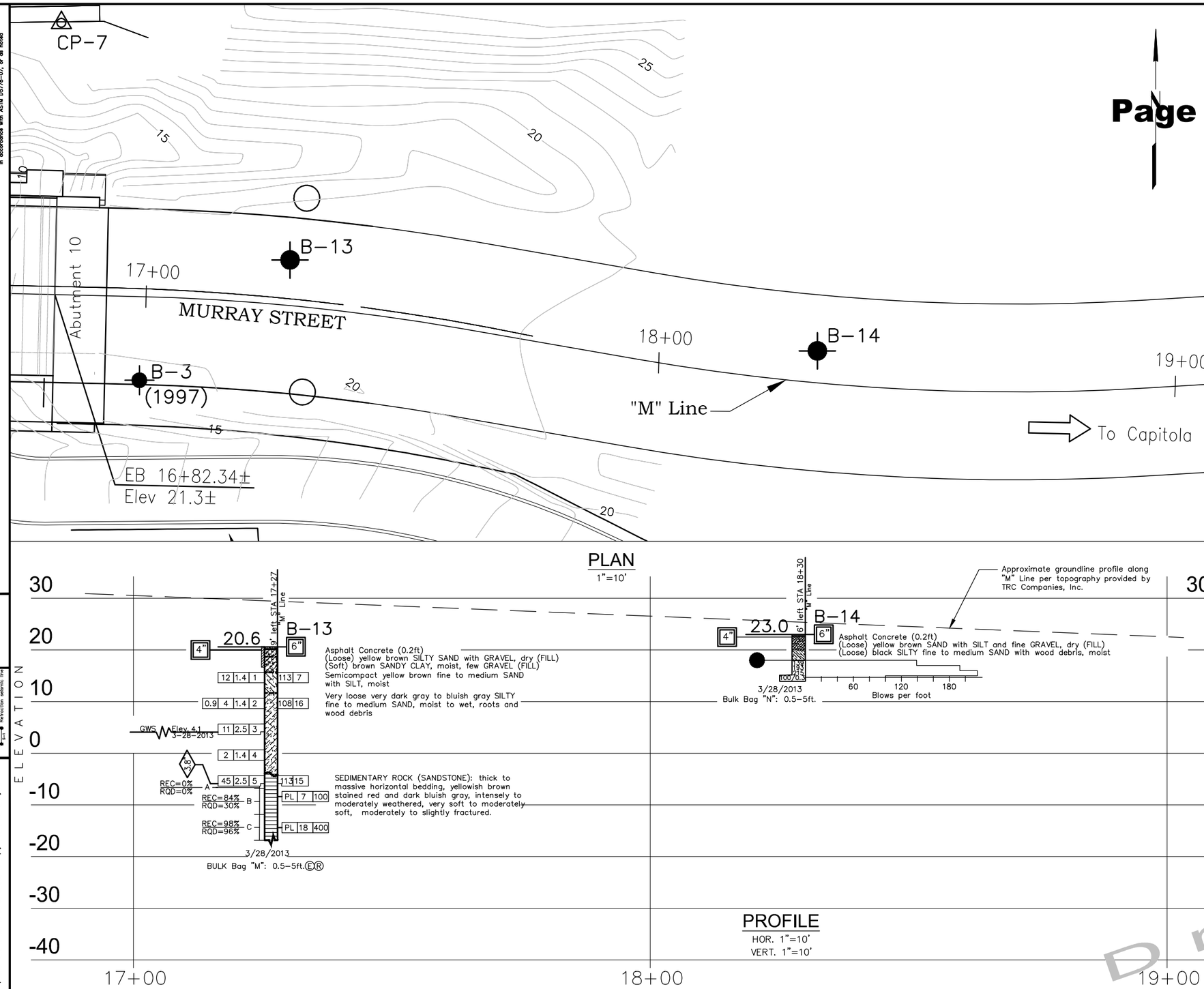

LEGEND OF BORING OPERATIONS

LEGEND OF EARTH MATERIALS

CONSISTENCY CLASSIFICATION FOR SOILS

According to the Standard Penetration Test

Standard Penetration "N"-Value	Granular	Cohesive
0-5	Very loose	Very soft
6-10	Loose	Soft
11-20	Semicompact	Stiff
21-35	Compact	Very stiff
36-70	Dense	Hard
>70	Very dense	Very hard

NOTE: Classification of earth material as shown on this sheet is based upon field inspection and is not to be construed to imply mechanical analysis.

DESIGN OVERSIGHT	DRAWN BY X. Vang	G. Wade, P.G. FIELD INVESTIGATOR	PREPARED FOR CITY OF SANTA CRUZ DEPARTMENT OF PUBLIC WORKS
SIGN OFF DATE	CHECKED BY A. Kahn	DATE April 2013	PROJECT ENGINEER

EXIS. BRIDGE NO. 36C-0108

POST MILE

Murray Street Bridge at Woods Lagoon

LOG OF TEST BORINGS No. 4 of 7

9/281/2015 2009-0272-2 LOTB Bridge.dwg

ORIGINAL SCALE IN INCHES FOR REDUCED PLANS 0 1 2 3

CU EA

DISREGARD PRINTS BEARING EARLIER REVISION DATES

REVISION DATES (PRELIMINARY STAGE ONLY) SHEET ? OF ?

Exhibit 3
3-22-0165
Page 167 of 176

DIST.	COUNTY	ROUTE	MILES TOTAL PROJECT	SHEET NO.	TOTAL SHEETS
05	SCR	C.R.			

REGISTERED GEOTECHNICAL ENGINEER

PLANS APPROVAL DATE

REGISTERED PROFESSIONAL ENGINEER FRANKLIN P. TABER No. 816 EXP. 3-31-10 GEOTECHNICAL STATE OF CALIFORNIA

TABER CONSULTANTS
3911 West Capitol Avenue
West Sacramento, CA 95691

JOB No. 1R2/396/66-9 LOCATION: 36122-H1:186N:006W

C+D Consulting Engineers
170 Columbus Avenue #240
San Francisco, CA 94133

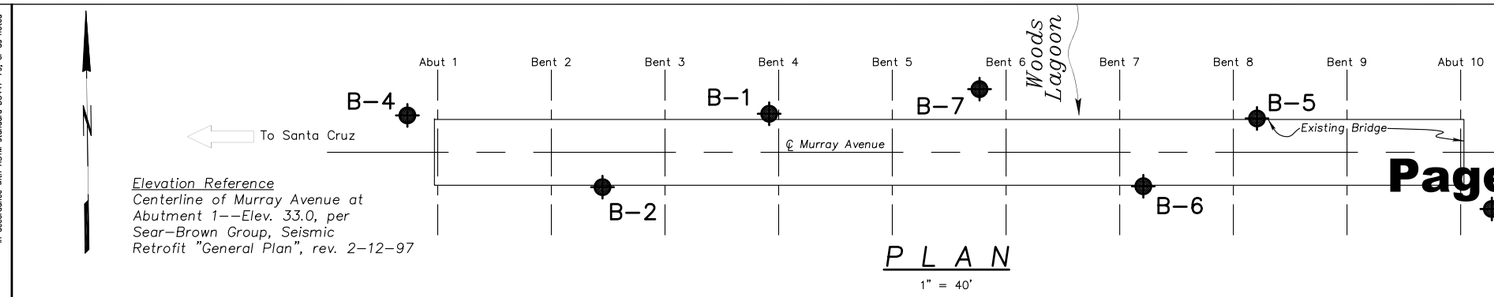

PLAN

1" = 40'

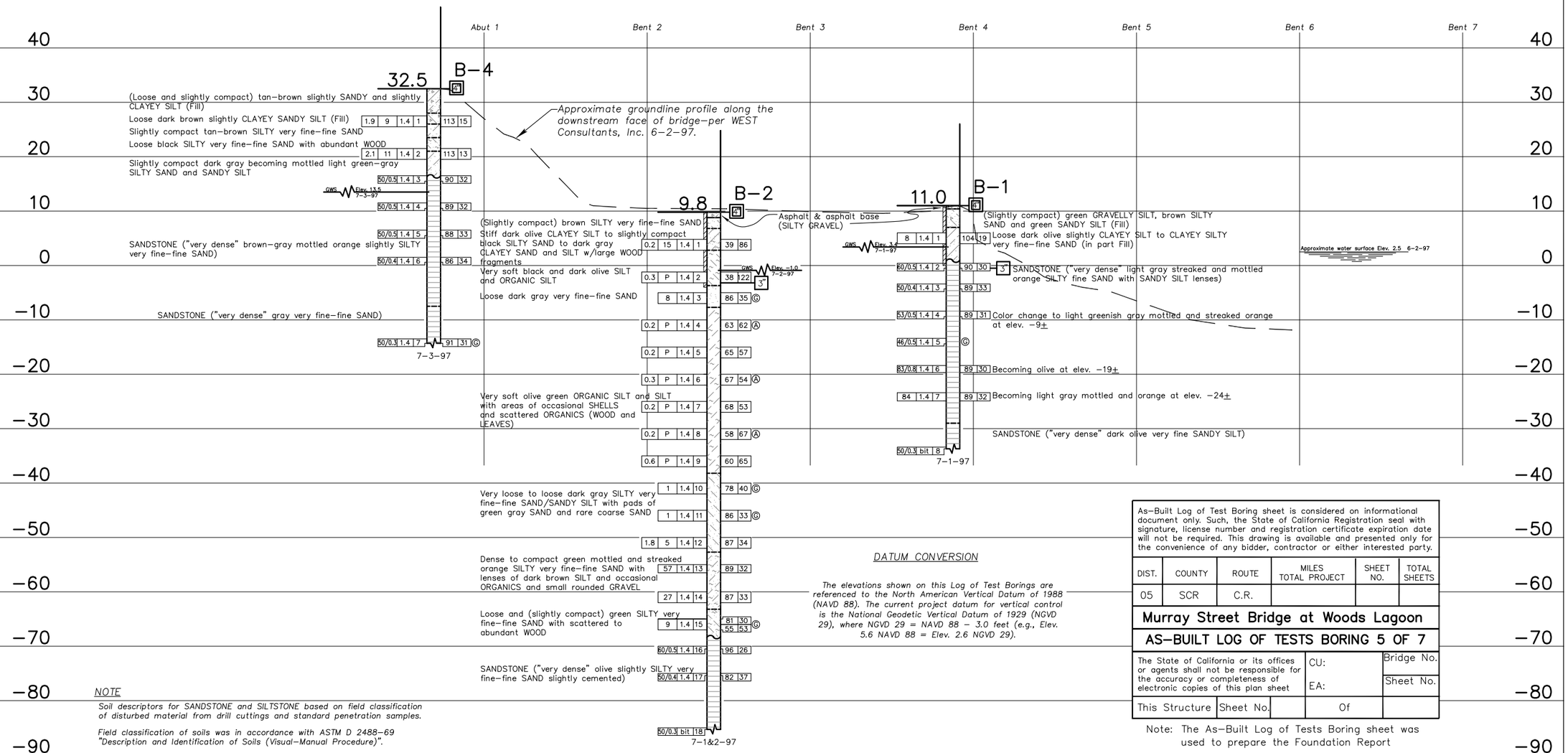

PROFILE

1" = 10' Vertical
1" = 20' Horizontal

DATUM CONVERSION

The elevations shown on this Log of Test Borings are referenced to the North American Vertical Datum of 1988 (NAVD 88). The current project datum for vertical control is the National Geodetic Vertical Datum of 1929 (NGVD 29), where NGVD 29 = NAVD 88 − 3.0 feet (e.g., Elev. 5.6 NAVD 88 = Elev. 2.6 NGVD 29).

NOTE

Soil descriptors for SANDSTONE and SILTSTONE based on field classification of disturbed material from drill cuttings and standard penetration samples.

Field classification of soils was in accordance with ASTM D 2488-69 "Description and Identification of Soils (Visual-Manual Procedure)".

Standard Penetration tests were performed in accordance with ASTM D 1586-84 using a safety hammer operated with cat-head, rope and pully. Drill rods were 1-5/8" diameter "A"-rods; sampler was driven with brass liners.

As-Built Log of Test Boring sheet is considered on informational document only. Such, the State of California Registration seal with signature, license number and registration certificate expiration date will not be required. This drawing is available and presented only for the convenience of any bidder, contractor or either interested party.

DIST.	COUNTY	ROUTE	MILES TOTAL PROJECT	SHEET NO.	TOTAL SHEETS
05	SCR	C.R.			

Murray Street Bridge at Woods Lagoon

AS-BUILT LOG OF TESTS BORING 5 OF 7

The State of California or its offices or agents shall not be responsible for the accuracy or completeness of electronic copies of this plan sheet

CU:	Bridge No.
EA:	Sheet No.

This Structure Sheet No. Of

Note: The As-Built Log of Tests Boring sheet was used to prepare the Foundation Report

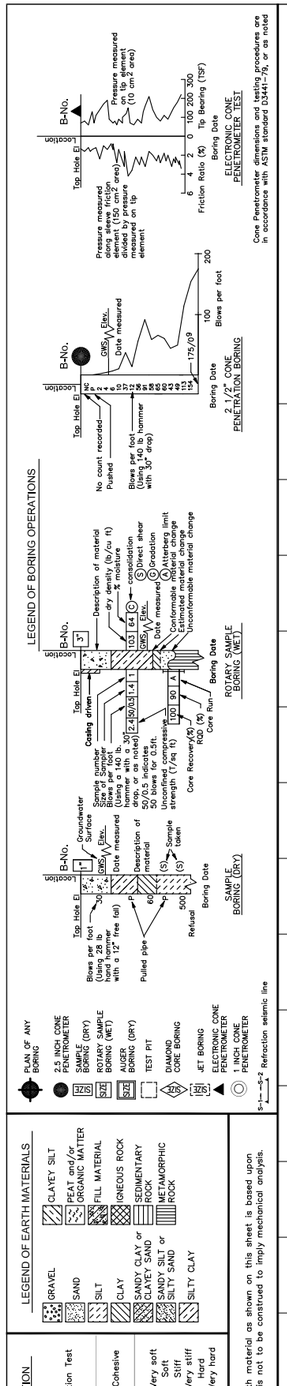

James J. Accinelli, DESIGN OVERSIGHT	DRAWN BY	M. D. Robertson	E. A. Hilmer, FIELD INVESTIGATOR
SIGN OFF DATE	CHECKED BY	H. C. Valencia	DATE July 1997

PREPARED FOR THE
CITY OF SANTA CRUZ
PUBLIC WORKS DEPARTMENT

Mark Salmon, PROJECT ENGINEER

CONTRACT: 59Y019

BRIDGE NO. 36C-0108
POST MILES

EARTHQUAKE RETROFIT
WOODS LAGOON BRIDGE
LOG OF TEST BORINGS No. 1 of 3

Exhibit 3
3-22-0165
Page 168 of 176

DIST.	COUNTY	ROUTE	MILES TOTAL PROJECT	SHEET NO.	TOTAL SHEETS
05	SCR	C.R.			

PROJECT GEOTECHNICAL ENGINEER

REGISTERED PROFESSIONAL ENGINEER FRANKLIN P. TABER No. 816 EXP. 3-31-10 GEOTECHNICAL STATE OF CALIFORNIA

TABER CONSULTANTS
3911 West Capitol Avenue
West Sacramento, CA 95691

JOB No. 1R2/396/66-9 LOCATION: 36122-H1:186N:006W

C+D Consulting Engineers
170 Columbus Avenue #240
San Francisco, CA 94133

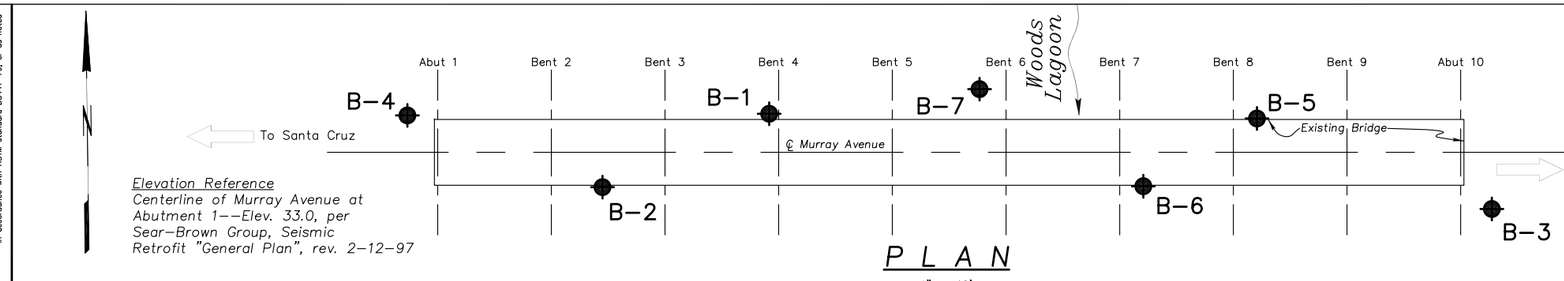

Elevation Reference
Centerline of Murray Avenue at Abutment 1—Elev. 33.0, per Sear-Brown Group, Seismic Retrofit "General Plan", rev. 2-12-97

PLAN

1" = 40'

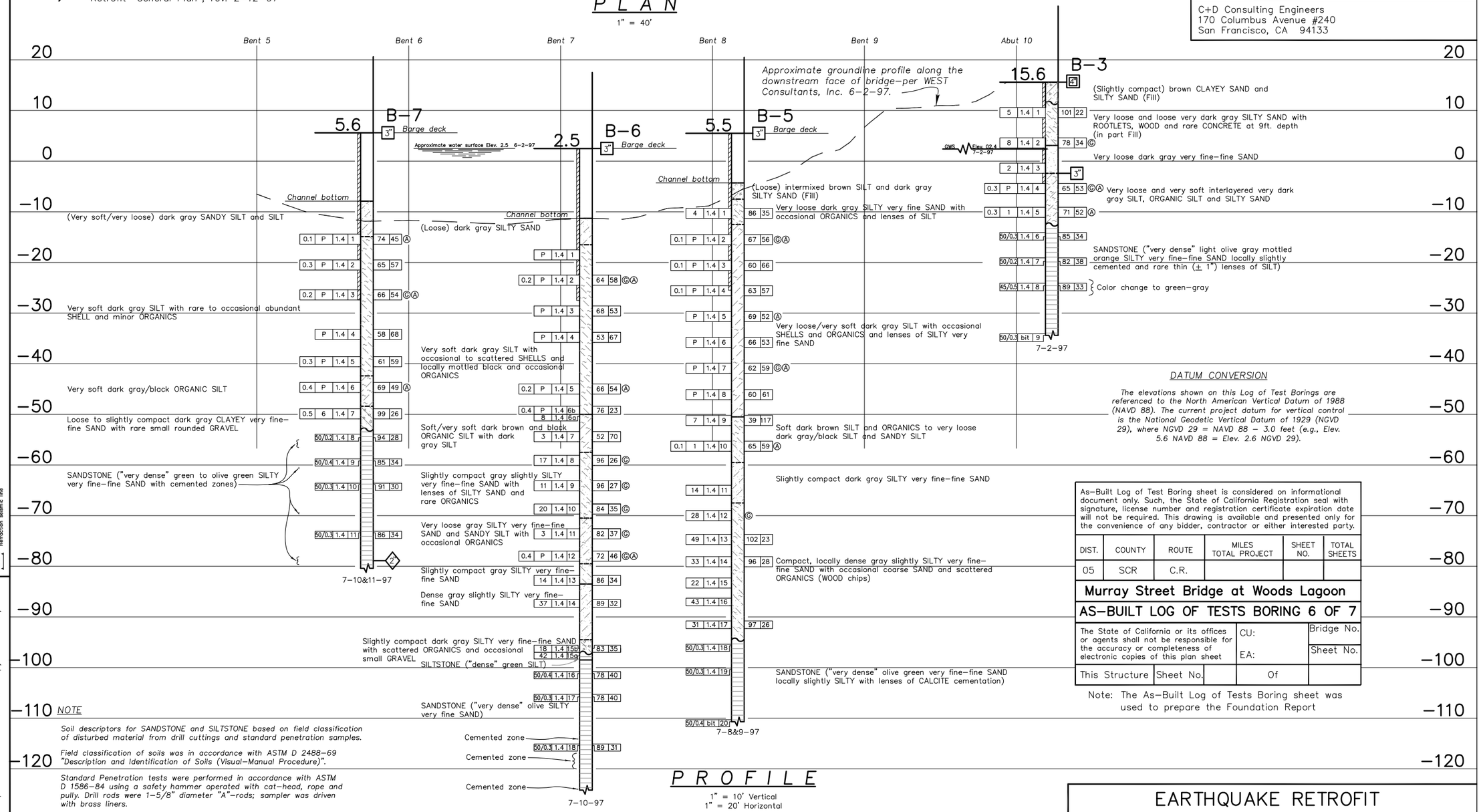

PROFILE

1" = 10' Vertical
1" = 20' Horizontal

DATUM CONVERSION

The elevations shown on this Log of Test Borings are referenced to the North American Vertical Datum of 1988 (NAVD 88). The current project datum for vertical control is the National Geodetic Vertical Datum of 1929 (NGVD 29), where NGVD 29 = NAVD 88 − 3.0 feet (e.g., Elev. 5.6 NAVD 88 = Elev. 2.6 NGVD 29).

NOTE

Soil descriptors for SANDSTONE and SILTSTONE based on field classification of disturbed material from drill cuttings and standard penetration samples.

Field classification of soils was in accordance with ASTM D 2488-69 "Description and Identification of Soils (Visual-Manual Procedure)".

Standard Penetration tests were performed in accordance with ASTM D 1586-84 using a safety hammer operated with cat-head, rope and pully. Drill rods were 1-5/8" diameter "A"-rods; sampler was driven with brass liners.

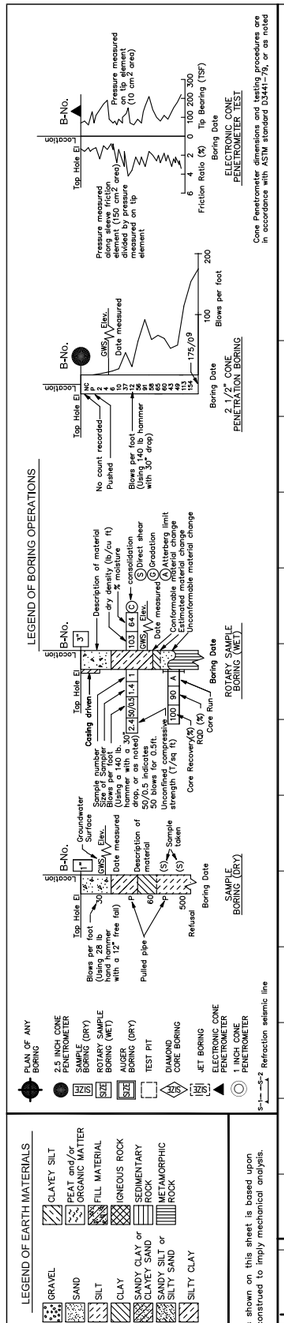

CONSISTENCY CLASSIFICATION FOR SOILS

According to the Standard Penetration Test

Standard Penetration "N"-Value	Granular	Cohesive
0–4	Very loose	Very soft
5–9	Loose	Soft
10–19	Slightly compact	Stiff
20–34	Compact	Very stiff
35–69	Dense	Hard
>70	Very dense	Very hard

NOTE: Classification of earth material as shown on this sheet is based upon field inspection and is not to be construed to imply mechanical analysis.

As-Built Log of Test Boring sheet is considered on informational document only. Such, the State of California Registration seal with signature, license number and registration certificate expiration date will not be required. This drawing is available and presented only for the convenience of any bidder, contractor or either interested party.

DIST.	COUNTY	ROUTE	MILES TOTAL PROJECT	SHEET NO.	TOTAL SHEETS
05	SCR	C.R.			

Murray Street Bridge at Woods Lagoon

AS-BUILT LOG OF TESTS BORING 6 OF 7

The State of California or its offices or agents shall not be responsible for the accuracy or completeness of electronic copies of this plan sheet

CU: EA: Bridge No. Sheet No.

This Structure Sheet No. Of

Note: The As-Built Log of Tests Boring sheet was used to prepare the Foundation Report

James J. Accinelli, DESIGN OVERSIGHT	DRAWN BY	M. D. Robertson	E. A. Hilmer, FIELD INVESTIGATOR
SIGN OFF DATE	CHECKED BY	H. C. Valencia	DATE July 1997

PREPARED FOR THE
CITY OF SANTA CRUZ
PUBLIC WORKS DEPARTMENT

Mark Salmon
PROJECT ENGINEER

CONTRACT: 59Y019

BRIDGE NO. 36C-0108
POST MILES

EARTHQUAKE RETROFIT
WOODS LAGOON BRIDGE
LOG OF TEST BORINGS No. 2 of 3

8/98 1R239666-9b.dwg

ORIGINAL SCALE IN INCHES FOR REDUCED PLANS 0 1 2 3

CU 05-152
EA L01904

DISREGARD PRINTS BEARING EARLIER REVISION DATES 8/14/98 04/21/99

REVISION DATES (PRELIMINARY STAGE ONLY) SHEET OF

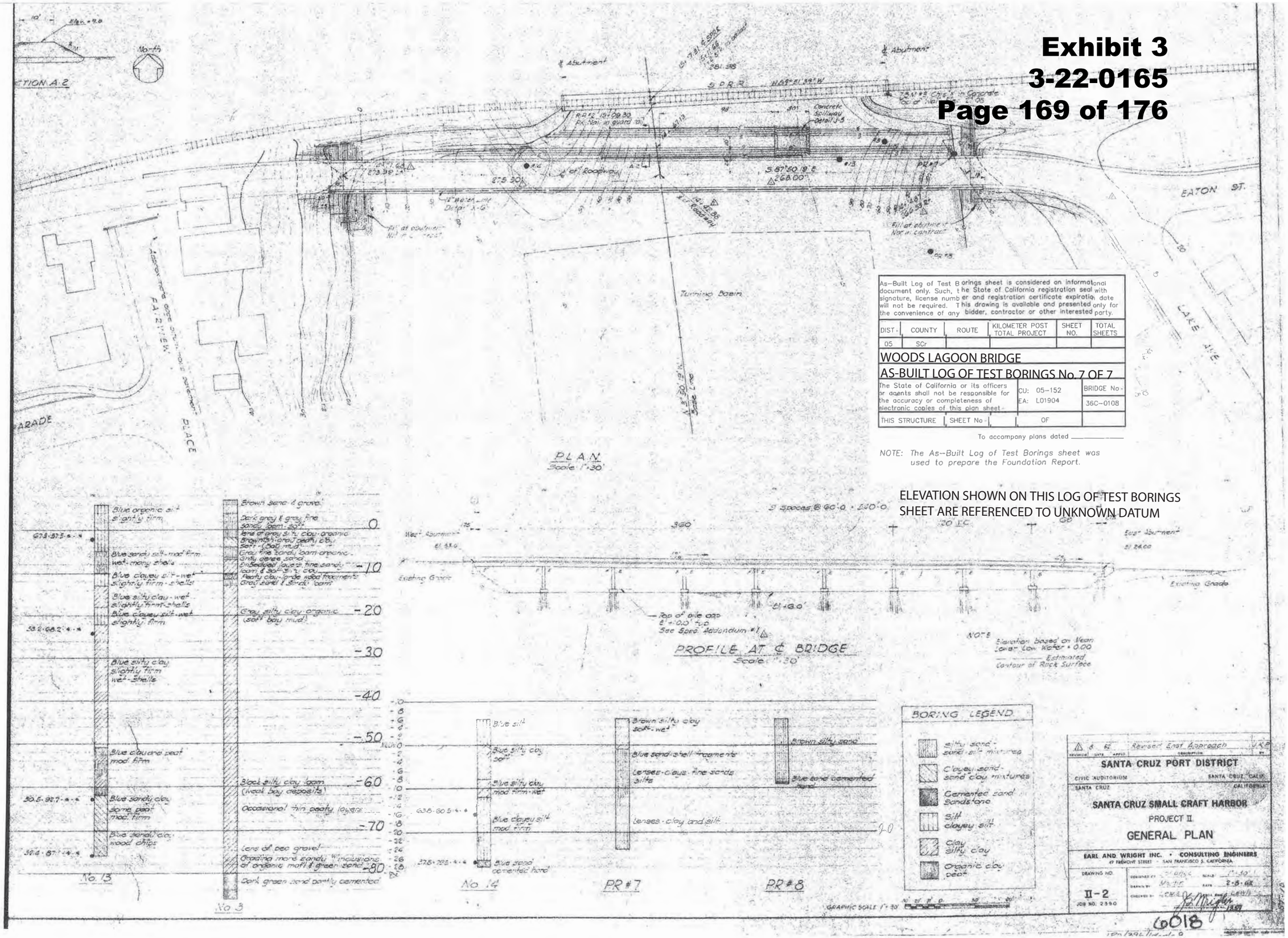

As-Built Log of Test Borings sheet is considered an informational document only. Such, the State of California registration seal with signature, license number and registration certificate expiration date will not be required. This drawing is available and presented only for the convenience of any bidder, contractor or other interested party.

DIST.	COUNTY	ROUTE	KILOMETER POST TOTAL PROJECT	SHEET NO.	TOTAL SHEETS
05	SCr				

WOODS LAGOON BRIDGE

AS-BUILT LOG OF TEST BORINGS No. 7 OF 7

The State of California or its officers or agents shall not be responsible for the accuracy or completeness of electronic copies of this plan sheet.	CU: 05-152 EA: L01904	BRIDGE No. 36C-0108
THIS STRUCTURE	SHEET No.	OF

To accompany plans dated _____

NOTE: The As-Built Log of Test Borings sheet was used to prepare the Foundation Report.

ELEVATION SHOWN ON THIS LOG OF TEST BORINGS SHEET ARE REFERENCED TO UNKNOWN DATUM

DIST.	COUNTY	ROUTE	POST MILES TOTAL PROJECT	SHEET NO.	TOTAL SHEETS
05				?	?

PREPARED BY
TABER CONSULTANTS
3911 West Capitol Avenue
West Sacramento, CA 95691-2116
(916) 371-1690
JOB No. 2009-272-2 LOCATION: 36122-H1:186N;006W

REGISTERED GEOLOGIST WILLIAM E. NICHOLS No. 2229 CERTIFIED ENGINEERING GEOLOGIST STATE OF CALIFORNIA

TRC Companies, Inc.
10680 White Rock Road
Rancho Cordova, CA 95670
(916) 366-0632

NOTES:

1. Field classification of soils was in accordance with ASTM D 2488-09a "Description and Identification of Soils (Visual-Manual Procedure)".

2. Standard Penetration tests (SPTs) were performed in accordance with ASTM D 1586-11 using hammer operated with an automated drop system. Drill rods were 1 5/8-inch diameter "A"-rods; sampler was driven with brass liners. SPT hammer energy ratio (ETR) measurements indicate an ETR=87% as of 4/09/2012 (2013 borings); ETR = 104% (2015 borings)

3. The length of each sampled interval is shown graphically on the boring log. Whole number blow counts ("N") represent the "standard penetration resistance" interval in accordance with ASTM D1586-11. Where less than 1 foot of penetration is achieved, the blow count shown is for that fraction of the "standard penetration resistance" interval actually penetrated. Where indicated by an asterisk (*) the number of blows shown is for only that fraction of the initial 0.5 ft "seating drive" interval penetration. Material characteristics shown in ( ) where estimated.

4. Rock classification according to Bureau of Reclamation, U.S. Department of the Interior (USBR), "Engineering Geology Field Manual", and "Manual of Field Geology", (Compton, Robert R.). USBR field descriptor sheet is attached. Rock Quality Designation (RQD), Weathering, Rock Hardness/Strength, Bedding, and Fracture Density, as shown on this sheet, were used to describe all rock core from borings B-8, B-9, B-10, B-11, B-13 and B-15, drilled in 2013. Descriptors were determined in the field. REC = Core Recovered (percent). RQD = Rock Quality Designation (percent).

5. Groundwater surface elevations in the borings indicated on the "Log of Test Borings" sheets reflect the fluid level in the borings on the specified date. Groundwater surface elevations are subject to seasonal fluctuations and may occur at higher or lower elevations depending on the conditions at any particular time.

6. All CPTs were advanced per ASTM D 5778 procedures. Cones used for CPTs were Vertek 1.4 in diameter (10 cm2) pushed from a 20-ton rig or from a CME 55 Track Mounted rig (using auger anchors to provide a 20-ton reaction), respectively.

7. Probes were conducted in the channel by manually pushing a ¼-inch steel probe through the alluvium until essential "refusal" was realized.

8. Approximate boring elevations were surveyed by Taber Consultants in the field at the time of subsurface exploration and correlated to topographic survey provided by TRC. Boring B-8 thru 16 elevation was estimated based on topography provided by TRC.

9. Electronic media for plan view provided by TRC.

10. Ground line profile is estimated from topography provided by TRC.

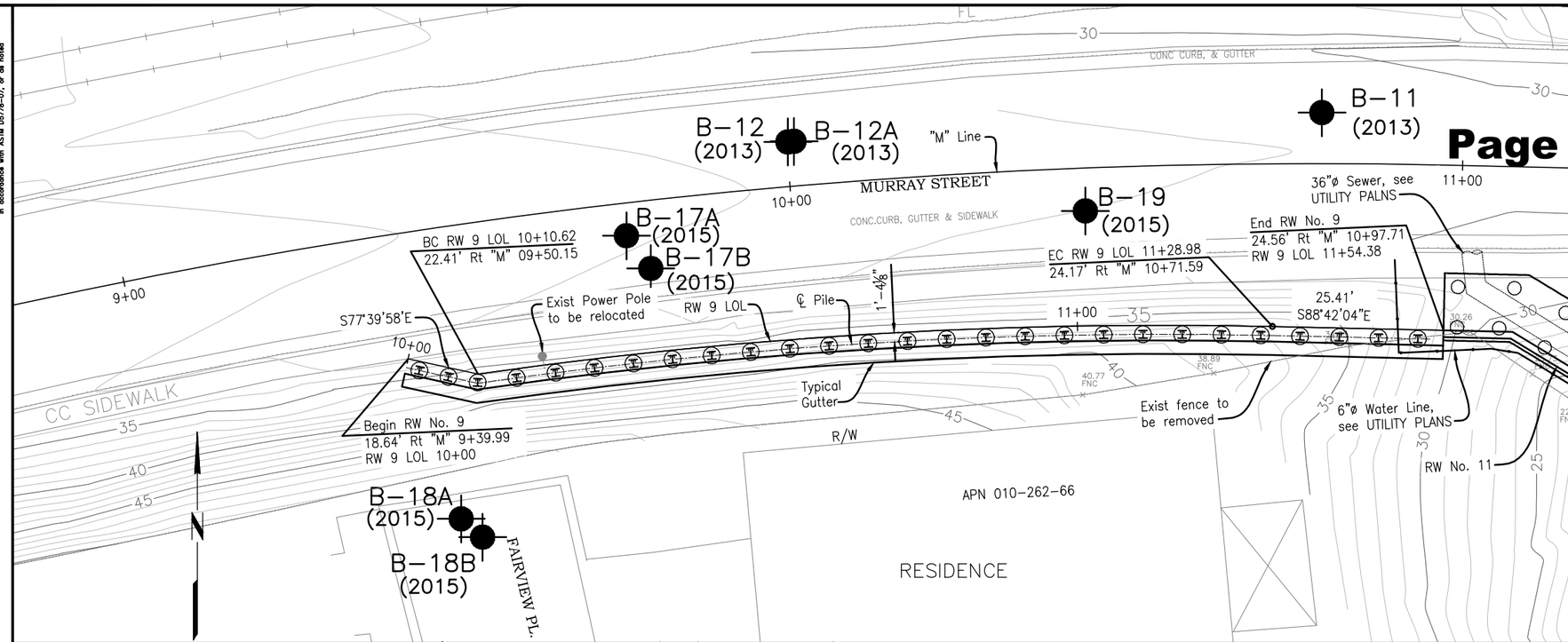

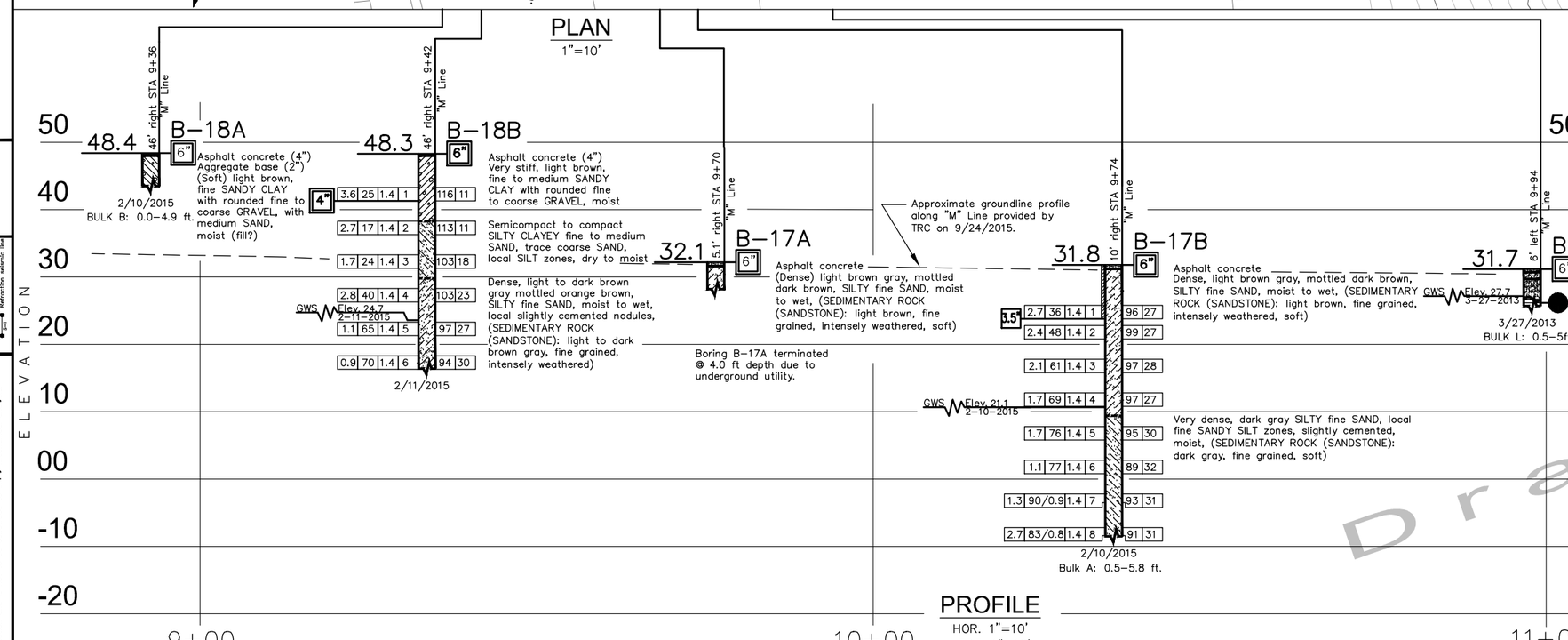

95% SUBMITAL NOT FOR CONSTRUCTION

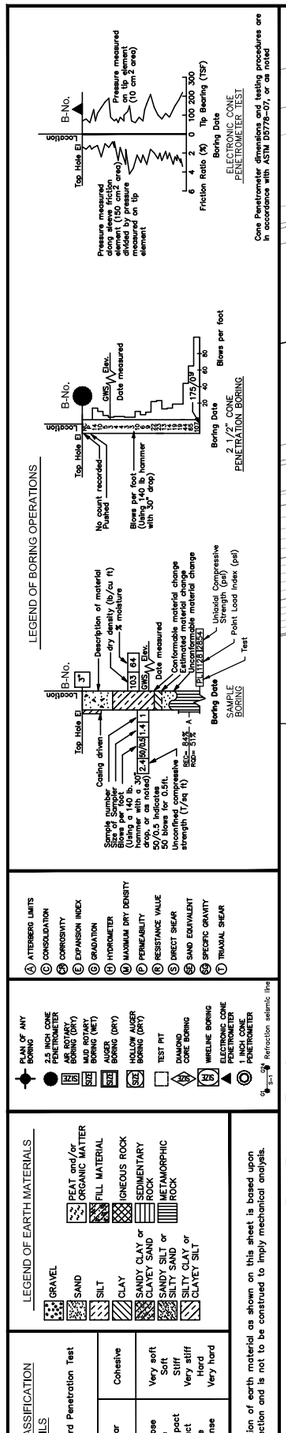

DESIGN OVERSIGHT	DRAWN BY X. Vang	G. Wade, P.G., A. Kahn FIELD INVESTIGATOR	PREPARED FOR CITY OF SANTA CRUZ DEPARTMENT OF PUBLIC WORKS
SIGN OFF DATE	CHECKED BY A. Kahn	DATE Mar. 2013, Feb. 2015	PROJECT ENGINEER

EXIS. BRIDGE NO.	Murray Street Bridge at Woods Lagoon
36C-0108	
POST MILE	LOG OF TEST BORINGS RW No. 9-1

9/25/2015 2009-0272-2 LOTB RW#09.dwg

ORIGINAL SCALE IN INCHES FOR REDUCED PLANS 0 1 2 3

CU
EA

DISREGARD PRINTS BEARING EARLIER REVISION DATES

REVISION DATES (PRELIMINARY STAGE ONLY) SHEET ? OF ?

DIST.	COUNTY	ROUTE	POST MILES TOTAL PROJECT	SHEET NO.	TOTAL SHEETS
05				?	?

Exhibit 3

3-22-0165

Page 171 of 176

REGISTERED GEOLOGIST WILLIAM E. NICHOLS No. 2229 CERTIFIED ENGINEERING GEOLOGIST STATE OF CALIFORNIA

PLANS APPROVAL DATE

TABER CONSULTANTS
3911 West Capitol Avenue
West Sacramento, CA 95691-2116
(916) 371-1690
JOB No. 2009-272-2 LOCATION: 36122-H1:186N;006W

TRC Companies, Inc.
10680 White Rock Road
Rancho Cordova, CA 95670
(916) 366-0632

NOTES:

1. Field classification of soils was in accordance with ASTM D 2488-09a "Description and Identification of Soils (Visual-Manual Procedure)".

2. Standard Penetration tests (SPTs) were performed in accordance with ASTM D 1586-11 using hammer operated with an automated drop system. Drill rods were 1 5/8-inch diameter "A"-rods; sampler was driven with brass liners. SPT hammer energy ratio (ETR) measurements indicate an ETR=87% as of 4/09/2012 (2013 borings); ETR = 104% (2015 borings).

3. The length of each sampled interval is shown graphically on the boring log. Whole number blow counts ("N") represent the "standard penetration resistance" interval in accordance with ASTM D1586-11. Where less than 1 foot of penetration is achieved, the blow count shown is for that fraction of the "standard penetration resistance" interval actually penetrated. Where indicated by an asterisk (*) the number of blows shown is for only that fraction of the initial 0.5 ft "seating drive" interval penetration. Material characteristics shown in ( ) where estimated.

4. Rock classification according to Bureau of Reclamation, U.S. Department of the Interior (USBR), "Engineering Geology Field Manual", and "Manual of Field Geology", (Compton, Robert R.). USBR field descriptor sheet is attached. Rock Quality Designation (RQD), Weathering, Rock Hardness/Strength, Bedding, and Fracture Density, as shown on this sheet, were used to describe all rock core from borings B-8, B-9, B-10, B-11, B-13 and B-15, drilled in 2013. Descriptors were determined in the field. REC = Core Recovered (percent). RQD = Rock Quality Designation (percent).

5. Groundwater surface elevations in the borings indicated on the "Log of Test Borings" sheets reflect the fluid level in the borings on the specified date. Groundwater surface elevations are subject to seasonal fluctuations and may occur at higher or lower elevations depending on the conditions at any particular time.

6. All CPTs were advanced per ASTM D 5778 procedures. Cones used for CPTs were Vertek 1.4 in diameter (10 cm2) pushed from a 20-ton rig or from a CME 55 Track Mounted rig (using auger anchors to provide a 20-ton reaction), respectively.

7. Probes were conducted in the channel by manually pushing a ¼-inch steel probe through the alluvium until essential "refusal" was realized.

8. Approximate boring elevations were surveyed by Taber Consultants in the field at the time of subsurface exploration and correlated to topographic survey provided by TRC. Boring B-8 thru 16 elevation was estimated based on topography provided by TRC.

9. Electronic media for plan view provided by TRC.

10. Ground line profile is estimated from topography provided by TRC.

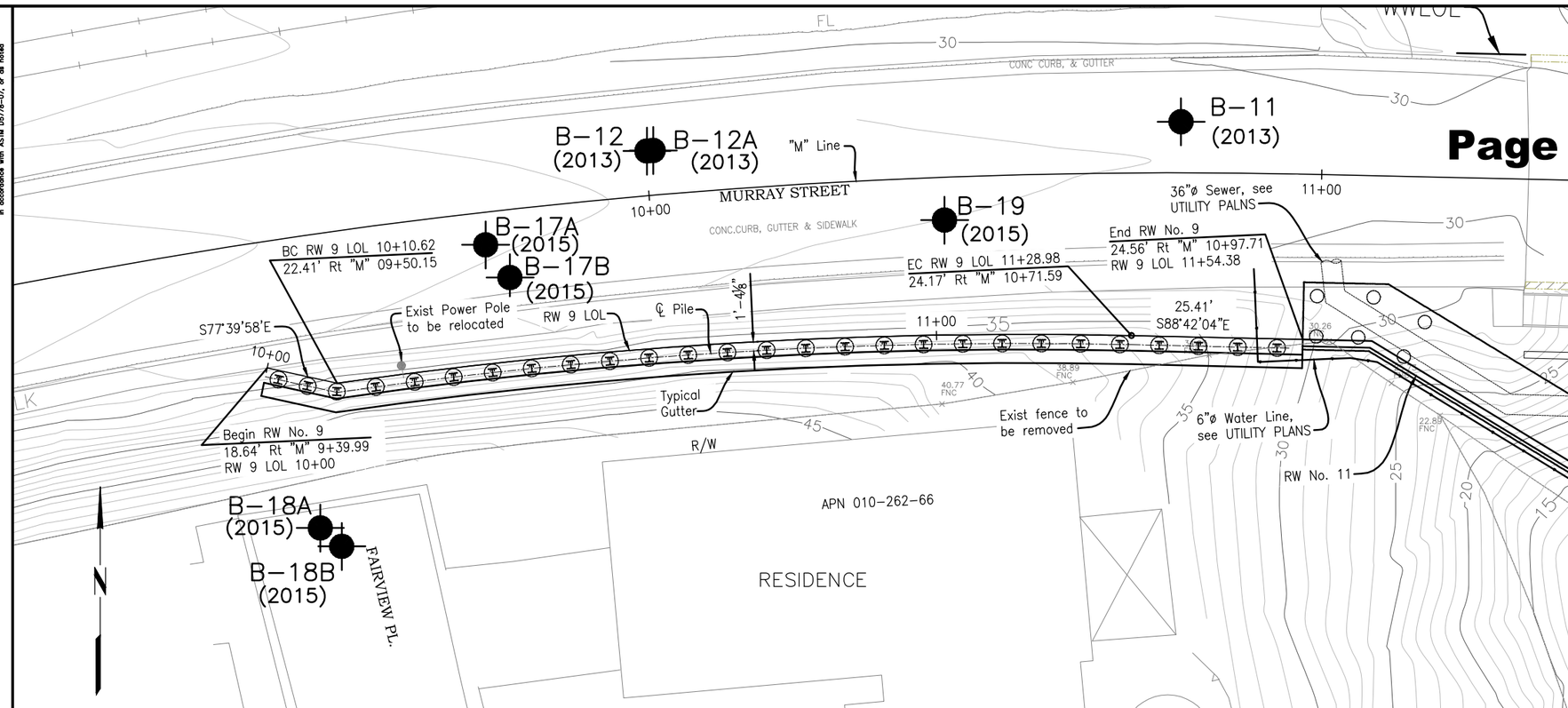

PLAN
1"=10'

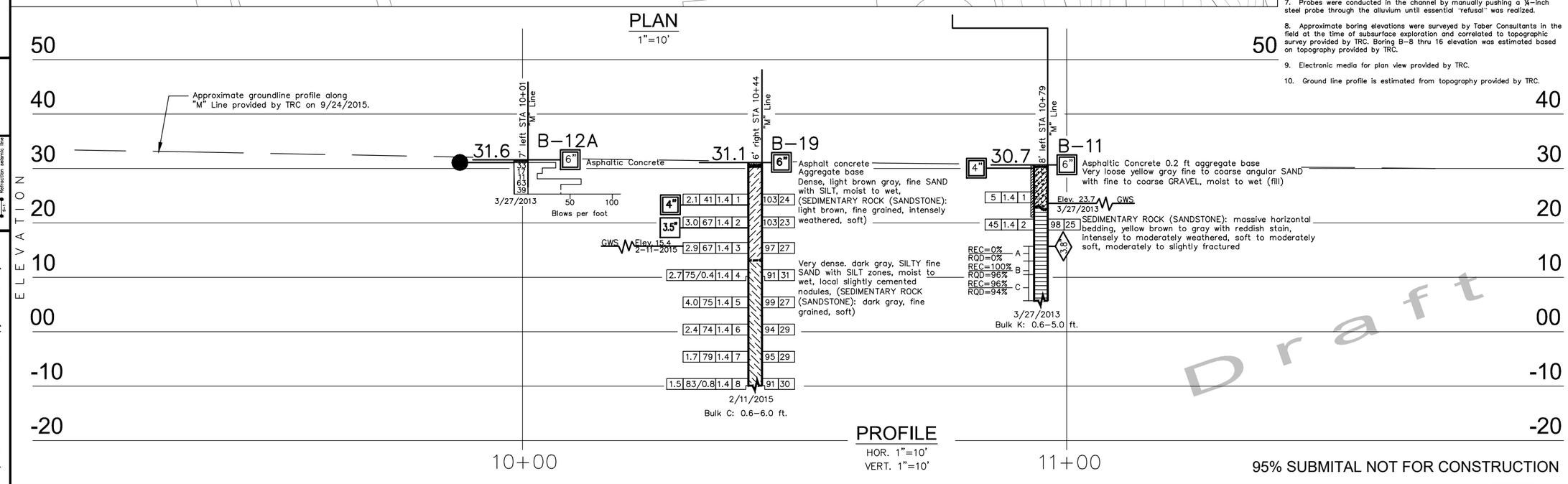

PROFILE
HOR. 1"=10'
VERT. 1"=10'

95% SUBMITAL NOT FOR CONSTRUCTION

Draft

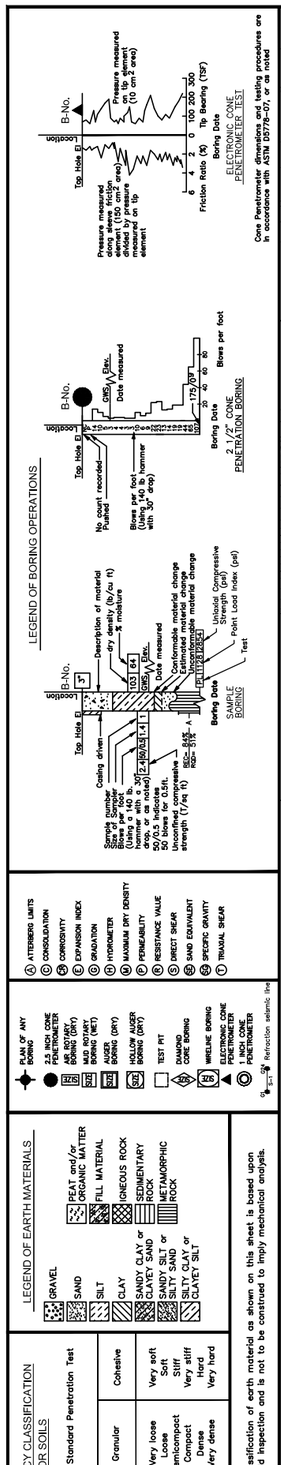

DESIGN OVERSIGHT	DRAWN BY	X. Vang	G. Wade, P.G., A. Kahn FIELD INVESTIGATOR
SIGN OFF DATE	CHECKED BY	A. Kahn	DATE Mar. 2013, Feb. 2015

PREPARED FOR
CITY OF SANTA CRUZ
DEPARTMENT OF PUBLIC WORKS

PROJECT ENGINEER

CU
EA

EXIS. BRIDGE NO. 36C-0108
POST MILE

Murray Street Bridge at Woods Lagoon

LOG OF TEST BORINGS RW No. 9-2

9/25/2015 2009-0272-2 LOTB RW#09.dwg

ORIGINAL SCALE IN INCHES FOR REDUCED PLANS 0 1 2 3

DISREGARD PRINTS BEARING EARLIER REVISION DATES

REVISION DATES (PRELIMINARY STAGE ONLY) SHEET ? OF ?

DIST.	COUNTY	ROUTE	POST MILES TOTAL PROJECT	SHEET NO.	TOTAL SHEETS
05	SC	1		?	?

Exhibit 3
3-22-0165
Page 172 of 176

CERTIFIED ENGINEERING GEOLOGIST

PLANS APPROVAL DATE

REGISTERED GEOLOGIST WILLIAM E. NICHOLS No. 2229 CERTIFIED ENGINEERING GEOLOGIST STATE OF CALIFORNIA

TABER CONSULTANTS
3911 West Capitol Avenue
West Sacramento, CA 95691-2116
(916) 371-1690
JOB No. 2009-272-2 LOCATION: 36122-H1:186N;006W

TRC Companies, Inc.
10680 White Rock Road
Rancho Cordova, CA 95670
(916) 366-0632

NOTES:

1. Field classification of soils was in accordance with ASTM D 2488-09a "Description and Identification of Soils (Visual-Manual Procedure)".

2. Standard Penetration tests (SPTs) were performed in accordance with ASTM D 1586-11 using hammer operated with an automated drop system. Drill rods were 1 5/8-inch diameter "A"-rods; sampler was driven with brass liners. SPT hammer energy ratio (ETR) measurements indicate an ETR=87% as of 4/09/2013. For 1997 borings, Standard Penetration tests were performed in accordance with ASTM D 1586-84 using a safety hammer operated with cat-head, rope and pulley. Drill rods were 1-5/8" diameter "A"-rods; sampler was driven with brass liners.

3. The length of each sampled interval is shown graphically on the boring log. Whole number blow counts ("N") represent the "standard penetration resistance" interval in accordance with ASTM D1586-11. Where less than 1 foot of penetration is achieved, the blow count shown is for that fraction of the "standard penetration resistance" interval actually penetrated. Where indicated by an asterisk (*) the number of blows shown is for only that fraction of the initial 0.5 ft "seating drive" interval penetration. Material characteristics shown in ( ) where estimated.

4. Rock classification according to Bureau of Reclamation, U.S. Department of the Interior (USBR), "Engineering Geology Field Manual"; and "Manual of Field Geology", (Compton, Robert R.). USBR field descriptor sheet is attached. Rock Quality Designation (RQD), Weathering, Rock Hardness/Strength, Bedding, and Fracture Density, as shown on this sheet, were used to describe all rock core from borings B-8, B-9, B-10, B-11, B-13 and B-15, drilled in 2013. Descriptors were determined in the field. REC = Core Recovered (percent). RQD = Rock Quality Designation (percent).

5. Groundwater surface elevations in the borings indicated on the "Log of Test Borings" sheets reflect the fluid level in the borings on the specified date. Groundwater surface elevations are subject to seasonal fluctuations and may occur at higher or lower elevations depending on the conditions at any particular time.

6. All CPTs were advanced per ASTM D 5778 procedures. Cones used for CPTs were Vertek 1.4 in diameter (10 cm2) pushed from a 20-ton rig or from a CME 55 Track Mounted rig (using auger anchors to provide a 20-ton reaction), respectively.

7. Probes were conducted in the channel by manually pushing a ¼-inch steel probe through the alluvium until essential "refusal" was realized.

8. Approximate boring elevations were surveyed by Taber Consultants in the field at the time of subsurface exploration and correlated to topographic survey provided by TRC. Boring B-8 thru 16 elevation was estimated based on topography provided by TRC.

9. Electronic media for plan view provided by TRC on 9/24/2015.

10. Ground line profile is estimated from topography provided by TRC on 9/24/2015.

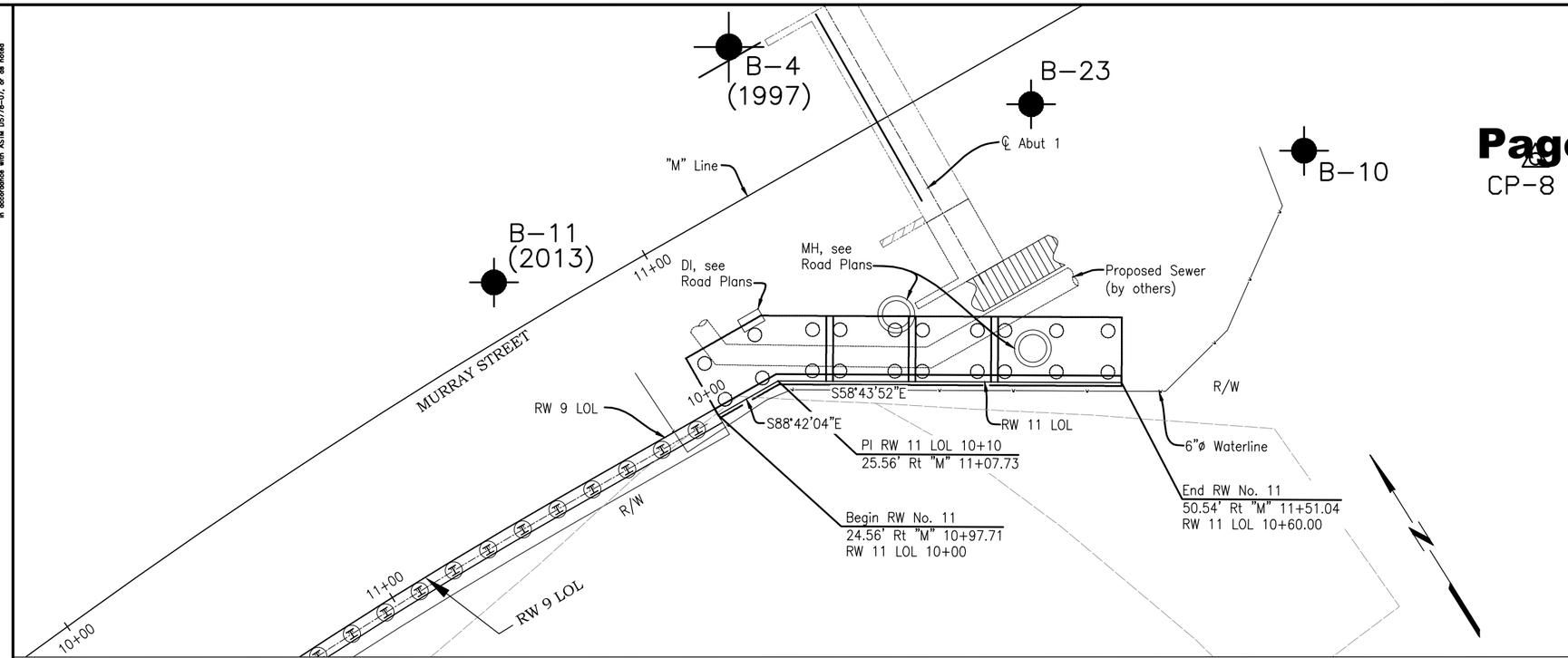

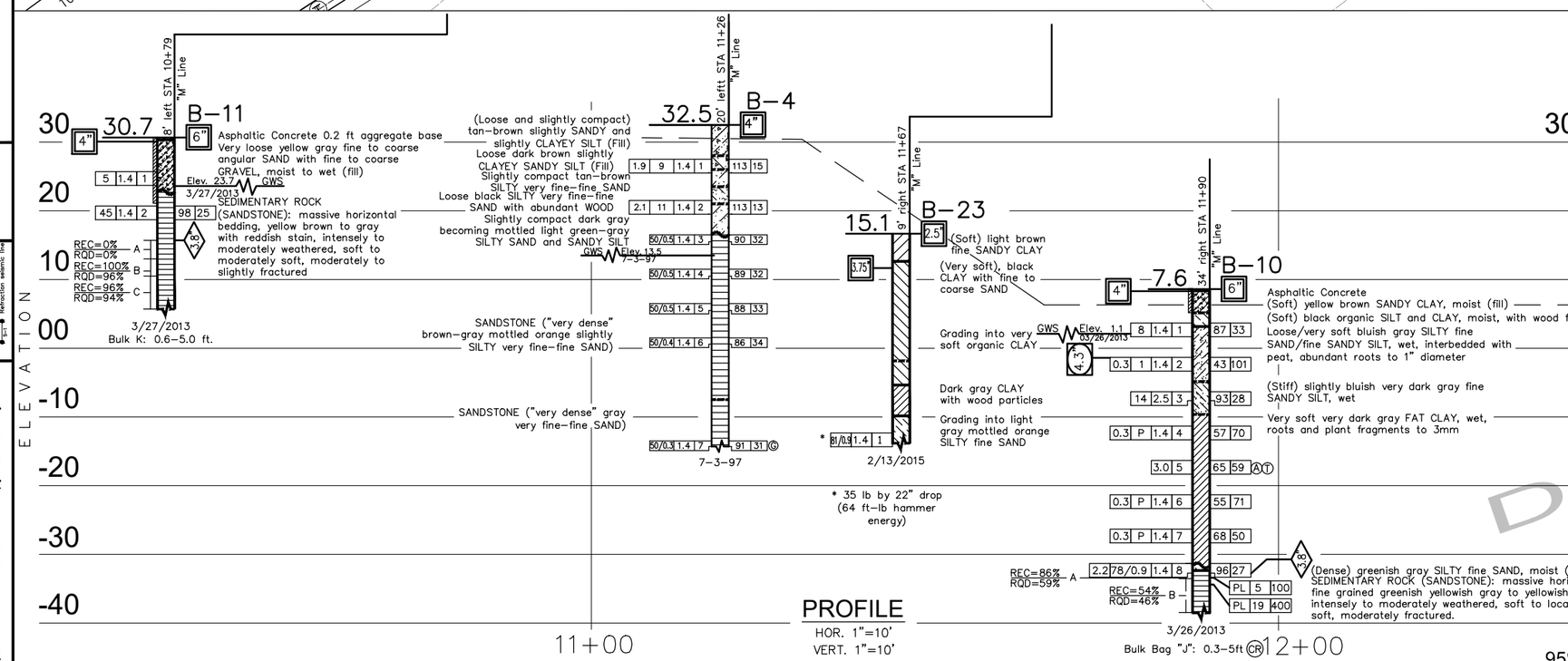

95% SUBMITAL NOT FOR CONSTRUCTION

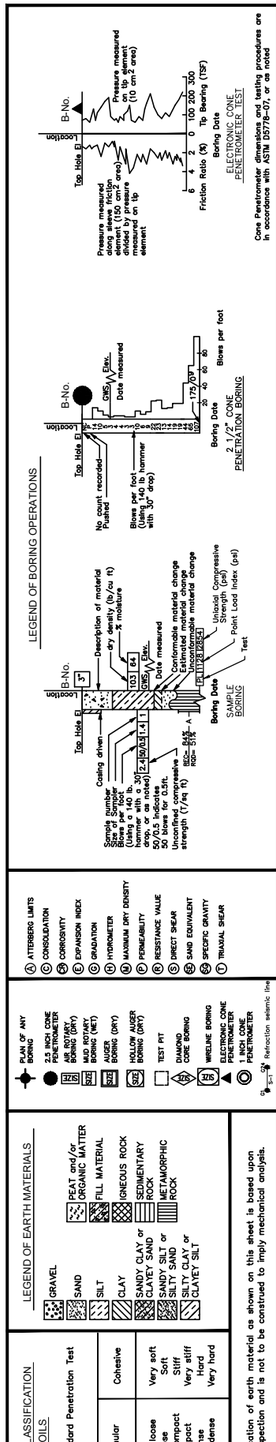

DESIGN OVERSIGHT	DRAWN BY X. Vang	G. Wade, P.G., A. Kahn FIELD INVESTIGATOR	PREPARED FOR CITY OF SANTA CRUZ DEPARTMENT OF PUBLIC WORKS
SIGN OFF DATE	CHECKED BY A. Kahn	DATE Mar. 2013, Feb. 2015	PROJECT ENGINEER

EXIS. BRIDGE NO. 36C-0108
POST MILE

Murray Street Bridge at Woods Lagoon

LOG OF TEST BORINGS RW No. 11

9/25/2015 2009-0272-2 LOTB RW#11.dwg

ORIGINAL SCALE IN INCHES FOR REDUCED PLANS 0 1 2 3

CU
EA

DISREGARD PRINTS BEARING EARLIER REVISION DATES

REVISION DATES (PRELIMINARY STAGE ONLY) SHEET ? OF ?

DIST.	COUNTY	ROUTE	POST MILES TOTAL PROJECT	SHEET NO.	TOTAL SHEETS
05	SCR			?	?

CERTIFIED ENGINEERING GEOLOGIST

REGISTERED GEOLOGIST No. 2229 CERTIFIED ENGINEERING GEOLOGIST STATE OF CALIFORNIA

TABER CONSULTANTS
3911 West Capitol Avenue
West Sacramento, CA 95691-2116
(916) 371-1690
JOB No. 2009-272-2 LOCATION: 36122-H1:186N;006W

TRC Companies, Inc.
10680 White Rock Road
Rancho Cordova, CA 95670
(916) 366-0632

NOTES:

1. Field classification of soils was in accordance with ASTM D 2488-09a "Description and Identification of Soils (Visual-Manual Procedure)".

2. Standard Penetration tests (SPTs) were performed in accordance with ASTM D 1586-11 using hammer operated with an automated drop system. Drill rods were 1 5/8-inch diameter "A"-rods; sampler was driven with brass liners. SPT hammer energy ratio (ETR) measurements indicate an ETR=104% as of 11/18/2014. For 1997 borings, Standard Penetration tests were performed in accordance with ASTM D 1586-84 using a safety hammer operated with cat-head, rope and pulley. Drill rods were 1-5/8" diameter "A"-rods; sampler was driven with brass liners.

3. The length of each sampled interval is shown graphically on the boring log. Whole number blow counts ("N") represent the "standard penetration resistance" interval in accordance with ASTM D1586-11. Where less than 1 foot of penetration is achieved, the blow count shown is for that fraction of the "standard penetration resistance" interval actually penetrated. Where indicated by an asterisk (*) the number of blows shown is for only that fraction of the initial 0.5 ft "seating drive" interval penetration. Material characteristics shown in ( ) where estimated.

4. Rock classification according to Bureau of Reclamation, U.S. Department of the Interior (USBR), "Engineering Geology Field Manual", and "Manual of Field Geology", (Compton, Robert R.). USBR field descriptor sheet is attached. Weathering, Rock Hardness/Strength, Bedding, and Fracture Density, as shown on this sheet, were used to describe all rock core from borings B-17B, B-18B, B-19, B-21, B-22, B-23, and B-25, drilled in 2015. Descriptors were determined in the field. REC = Core Recovered (percent). RQD = Rock Quality Designation (percent).

5. Groundwater surface elevations in the borings indicated on the "Log of Test Borings" sheets reflect the fluid level in the borings on the specified date. Groundwater surface elevations are subject to seasonal fluctuations and may occur at higher or lower elevations depending on the conditions at any particular time.

6. All CPTs were advanced per ASTM D 5778 procedures. Cones used for CPTs were Vertek 1.4 in diameter (10 cm2) pushed from a 20-ton rig or from a CME 55 Track Mounted rig (using auger anchors to provide a 20-ton reaction), respectively.

7. Probes were conducted in the channel by manually pushing a ¼-inch steel probe through the alluvium until essential "refusal" was realized.

8. Approximate boring elevations were surveyed by Taber Consultants in the field at the time of subsurface exploration and correlated to topographic survey provided by TRC.

9. Electronic media for plan view provided by TRC on 9/24/2015.

10. Ground line profile is estimated from topography provided by TRC on 9/24/2015.

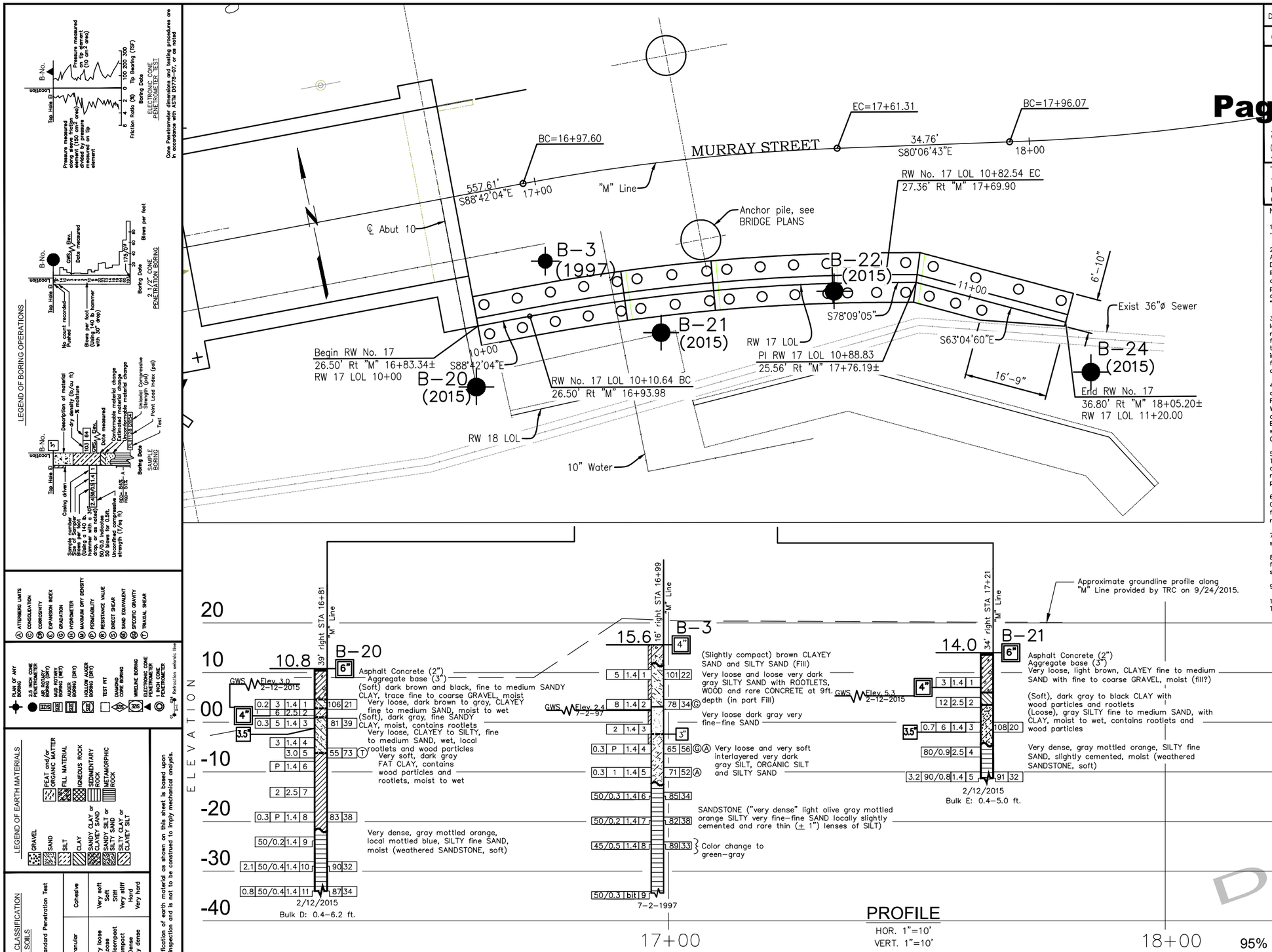

PROFILE
HOR. 1"=10'
VERT. 1"=10'

95% SUBMITAL NOT FOR CONSTRUCTION

LEGEND OF BORING OPERATIONS

LEGEND OF EARTH MATERIALS: GRAVEL, SAND, SILT, CLAY, SANDY CLAY or CLAYEY SAND, SANDY SILT or SILTY SAND, SILTY CLAY or CLAYEY SILT, PEAT and/or ORGANIC MATTER, FILL MATERIAL, IGNEOUS ROCK, SEDIMENTARY ROCK, METAMORPHIC ROCK

CONSISTENCY CLASSIFICATION FOR SOILS

According to the Standard Penetration Test			
Standard Penetration "N"-Value	Granular	Cohesive	
0-5	Very loose	Very soft	
6-10	Loose	Soft	
11-20	Semicompact	Stiff	
21-35	Compact	Very stiff	
36-70	Dense	Hard	
>70	Very dense	Very hard	

NOTE: Classification of earth material as shown on this sheet is based upon field inspection and is not to be construed to imply mechanical analysis.

DESIGN OVERSIGHT	DRAWN BY	X. Vang	Amanda Kahn FIELD INVESTIGATOR	PREPARED FOR CITY OF SANTA CRUZ DEPARTMENT OF PUBLIC WORKS	PROJECT ENGINEER	EXIS. BRIDGE NO. 36C-0108	Murray Street Bridge at Woods Lagoon
SIGN OFF DATE	CHECKED BY	A. Kahn	DATE July 1997, Fe. 2015			POST MILE	LOG OF TEST BORINGS RW No. 17-1

9/25/2015 2009-0272-2 LOTB RW#17.dwg

ORIGINAL SCALE IN INCHES FOR REDUCED PLANS 0 1 2 3

CU
EA

DISREGARD PRINTS BEARING EARLIER REVISION DATES

REVISION DATES (PRELIMINARY STAGE ONLY) SHEET ? OF ?

DIST.	COUNTY	ROUTE	POST MILES TOTAL PROJECT	SHEET NO.	TOTAL SHEETS
05	SCR			?	?

CERTIFIED ENGINEERING GEOLOGIST
PLANS APPROVAL DATE
TABER CONSULTANTS
3911 West Capitol Avenue
West Sacramento, CA 95691-2116
(916) 371-1690
JOB No. 2009-272-2 LOCATION: 36122-H1:186N:006W

CERTIFIED ENGINEERING GEOLOGIST No. 2229 STATE OF CALIFORNIA

TRC Companies, Inc.
10680 White Rock Road
Rancho Cordova, CA 95670
(916) 366-0632

NOTES:

1. Field classification of soils was in accordance with ASTM D 2488-09a "Description and Identification of Soils (Visual-Manual Procedure)".

2. Standard Penetration tests (SPTs) were performed in accordance with ASTM D 1586-11 using hammer operated with an automated drop system. Drill rods were 1 5/8-inch diameter "A"-rods; sampler was driven with brass liners. SPT hammer energy ratio (ETR) measurements indicate an ETR=104% as of 11/18/2014. For 1997 borings, Standard Penetration tests were performed in accordance with ASTM D 1586-84 using a safety hammer operated with cat-head, rope and pulley. Drill rods were 1-5/8" diameter "A"-rods; sampler was driven with brass liners.

3. The length of each sampled interval is shown graphically on the boring log. Whole number blow counts ("N") represent the "standard penetration resistance" interval in accordance with ASTM D1586-11. Where less than 1 foot of penetration is achieved, the blow count shown is for that fraction of the "standard penetration resistance" interval actually penetrated. Where indicated by an asterisk (*) the number of blows shown is for only that fraction of the initial 0.5 ft "seating drive" interval penetration. Material characteristics shown in ( ) where estimated.

4. Rock classification according to Bureau of Reclamation, U.S. Department of the Interior (USBR), "Engineering Geology Field Manual", and "Manual of Field Geology", (Compton, Robert R.). USBR field descriptor sheet is attached. Weathering, Rock Hardness/Strength, Bedding, and Fracture Density, as shown on this sheet, were used to describe all rock core from borings B-17B, B-18B, B-19, B-21, B-22, B-23, and B-25, drilled in 2015. Descriptors were determined in the field. REC = Core Recovered (percent). RQD = Rock Quality Designation (percent).

5. Groundwater surface elevations in the borings indicated on the "Log of Test Borings" sheets reflect the fluid level in the borings on the specified date. Groundwater surface elevations are subject to seasonal fluctuations and may occur at higher or lower elevations depending on the conditions at any particular time.

6. All CPTs were advanced per ASTM D 5778 procedures. Cones used for CPTs were Vertek 1.4 in diameter (10 cm2) pushed from a 20-ton rig or from a CME 55 Track Mounted rig (using auger anchors to provide a 20-ton reaction), respectively.

7. Probes were conducted in the channel by manually pushing a ¼-inch steel probe through the alluvium until essential "refusal" was realized.

8. Approximate boring elevations were surveyed by Taber Consultants in the field at the time of subsurface exploration and correlated to topographic survey provided by TRC.

9. Electronic media for plan view provided by TRC on 9/24/2015.

10. Ground line profile is estimated from topography provided by TRC on 9/24/2015.

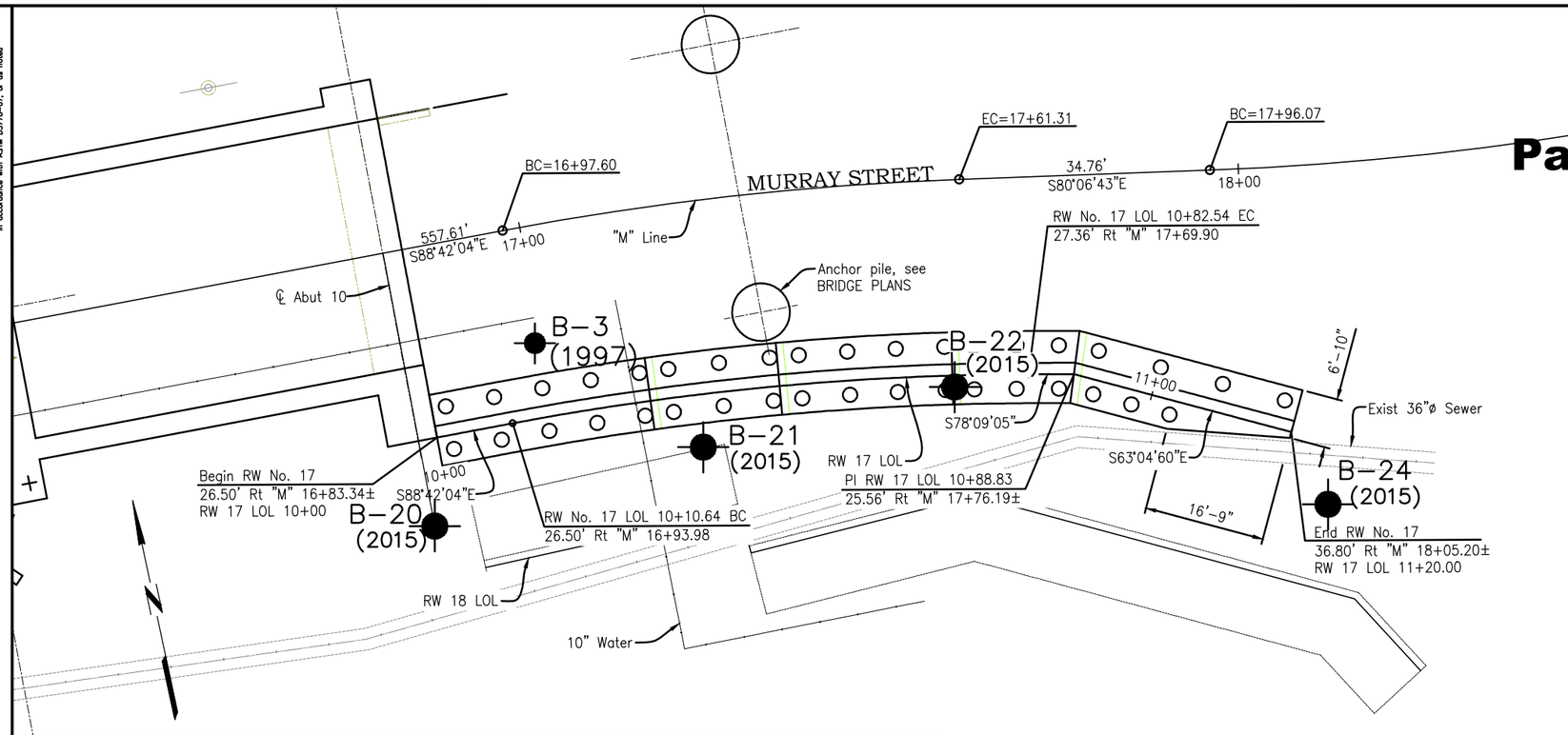

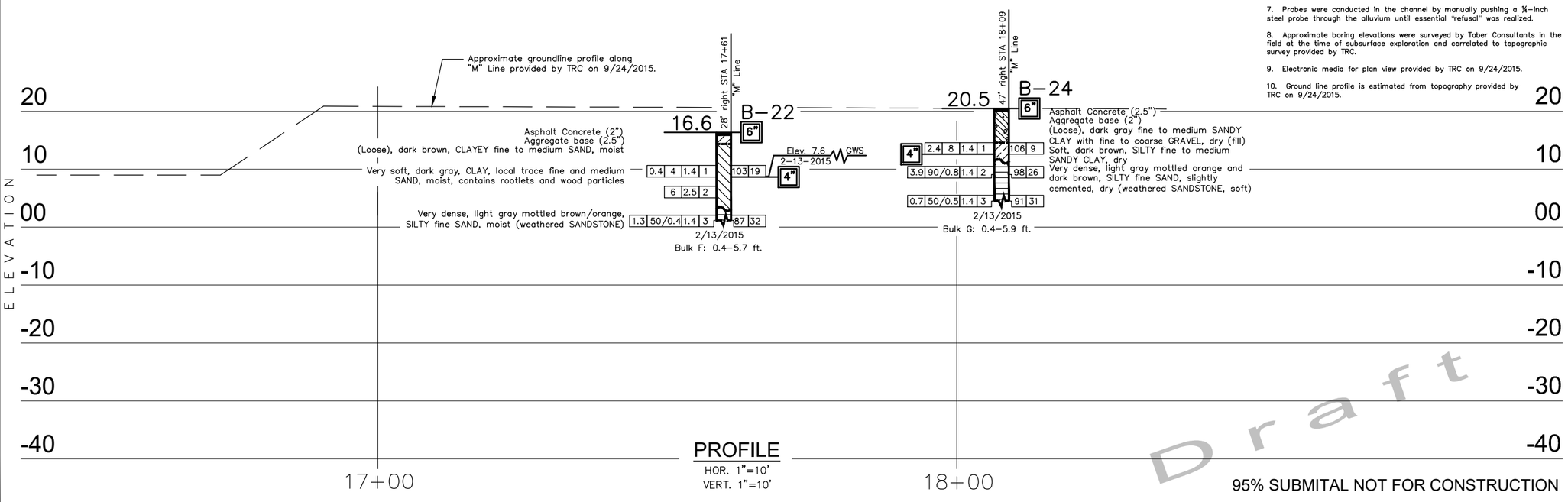

PROFILE
HOR. 1"=10'
VERT. 1"=10'

Draft

95% SUBMITAL NOT FOR CONSTRUCTION

LEGEND OF BORING OPERATIONS

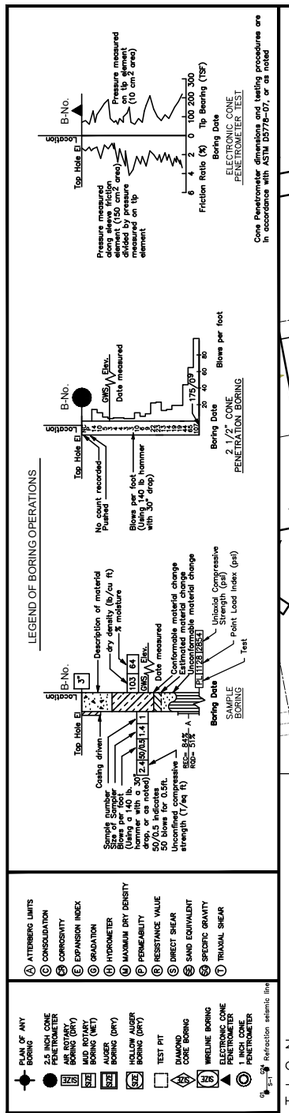

LEGEND OF EARTH MATERIALS

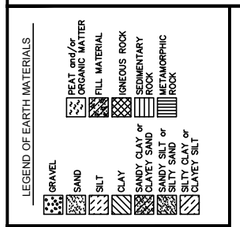

CONSISTENCY CLASSIFICATION FOR SOILS

According to the Standard Penetration Test

Standard Penetration "N"-Value	Granular	Cohesive
0-5	Very loose	Very soft
6-10	Loose	Soft
11-20	Semicompact	Stiff
21-35	Compact	Very stiff
36-70	Dense	Hard
>70	Very dense	Very hard

NOTE: Classification of earth material as shown on this sheet is based upon field inspection and is not to be construed to imply mechanical analysis.

DESIGN OVERSIGHT	DRAWN BY	X. Vang	Amanda Kahn FIELD INVESTIGATOR
SIGN OFF DATE	CHECKED BY	A. Kahn	DATE February 2015

PREPARED FOR
CITY OF SANTA CRUZ
DEPARTMENT OF PUBLIC WORKS

PROJECT ENGINEER

EXIS. BRIDGE NO. 36C-0108
POST MILE

Murray Street Bridge at Woods Lagoon

LOG OF TEST BORINGS RW No. 17-2

9/25/2015 2009-0272-2 LOTB RW#17.dwg

ORIGINAL SCALE IN INCHES FOR REDUCED PLANS 0 1 2 3

CU
EA

DISREGARD PRINTS BEARING EARLIER REVISION DATES

REVISION DATES (PRELIMINARY STAGE ONLY) SHEET ? OF ?

Exhibit 3
3-22-0165
Page 175 of 176

DIST.	COUNTY	ROUTE	POST MILES TOTAL PROJECT	SHEET NO.	TOTAL SHEETS
05	SC	[illegible]		?	?

CERTIFIED ENGINEERING GEOLOGIST

PLANS APPROVAL DATE

REGISTERED GEOLOGIST WILLIAM E. NICHOLS No. 2229 CERTIFIED ENGINEERING GEOLOGIST STATE OF CALIFORNIA

TABER CONSULTANTS
3911 West Capitol Avenue
West Sacramento, CA 95691-2116
(916) 371-1690
JOB No. 2009-272-2 LOCATION: 36122-H1:186N;006W

TRC Companies, Inc.
10680 White Rock Road
Rancho Cordova, CA 95670
(916) 366-0632

NOTES:

1. Field classification of soils was in accordance with ASTM D 2488-09a "Description and Identification of Soils (Visual-Manual Procedure)".

2. Standard Penetration tests (SPTs) were performed in accordance with ASTM D 1586-11 using hammer operated with an automated drop system. Drill rods were 1 5/8-inch diameter "A"-rods; sampler was driven with brass liners. SPT hammer energy ratio (ETR) measurements indicate an ETR=87% as of 4/09/2013. For 1997 borings, Standard Penetration tests were performed in accordance with ASTM D 1586-84 using a safety hammer operated with cat-head, rope and pulley. Drill rods were 1-5/8" diameter "A"-rods; sampler was driven with brass liners.

3. The length of each sampled interval is shown graphically on the boring log. Whole number blow counts ("N") represent the "standard penetration resistance" interval in accordance with ASTM D1586-11. Where less than 1 foot of penetration is achieved, the blow count shown is for that fraction of the "standard penetration resistance" interval actually penetrated. Where indicated by an asterisk (*) the number of blows shown is for only that fraction of the initial 0.5 ft "seating drive" interval penetration. Material characteristics shown in ( ) where estimated.

4. Rock classification according to Bureau of Reclamation, U.S. Department of the Interior (USBR), "Engineering Geology Field Manual", and "Manual of Field Geology", (Compton, Robert R.). USBR field descriptor sheet is attached. Rock Quality Designation (RQD), Weathering, Rock Hardness/Strength, Bedding, and Fracture Density, as shown on this sheet, were used to describe all rock core from borings B-17B, B-18B, B-19, B-21, B-22, B-23, and B-25, drilled in 2015. Descriptors were determined in the field. REC = Core Recovered (percent). RQD = Rock Quality Designation (percent).

5. Groundwater surface elevations in the borings indicated on the "Log of Test Borings" sheets reflect the fluid level in the borings on the specified date. Groundwater surface elevations are subject to seasonal fluctuations and may occur at higher or lower elevations depending on the conditions at any particular time.

6. All CPTs were advanced per ASTM D 5778 procedures. Cones used for CPTs were Vertek 1.4 in diameter (10 cm2) pushed from a 20-ton rig or from a CME 55 Track Mounted rig (using auger anchors to provide a 20-ton reaction), respectively.

7. Probes were conducted in the channel by manually pushing a ¼-inch steel probe through the alluvium until essential "refusal" was realized.

8. Approximate boring elevations were surveyed by Taber Consultants in the field at the time of subsurface exploration and correlated to topographic survey provided by TRC. Boring B-17B thru 24 elevation was estimated based on topography provided by TRC.

9. Electronic media for plan view provided by TRC on September 24, 2015..

10. Ground line profile is estimated from topography provided by TRC on 9/24/2015.

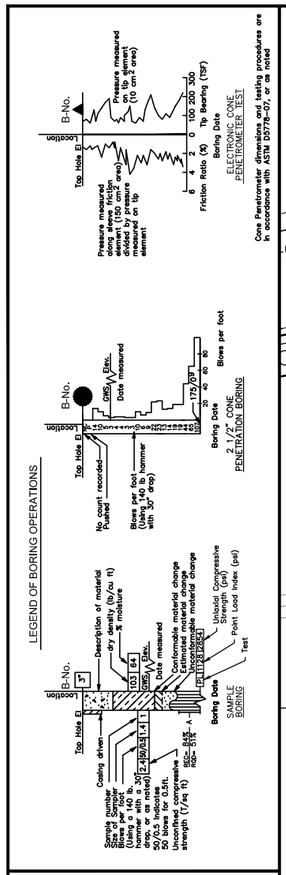

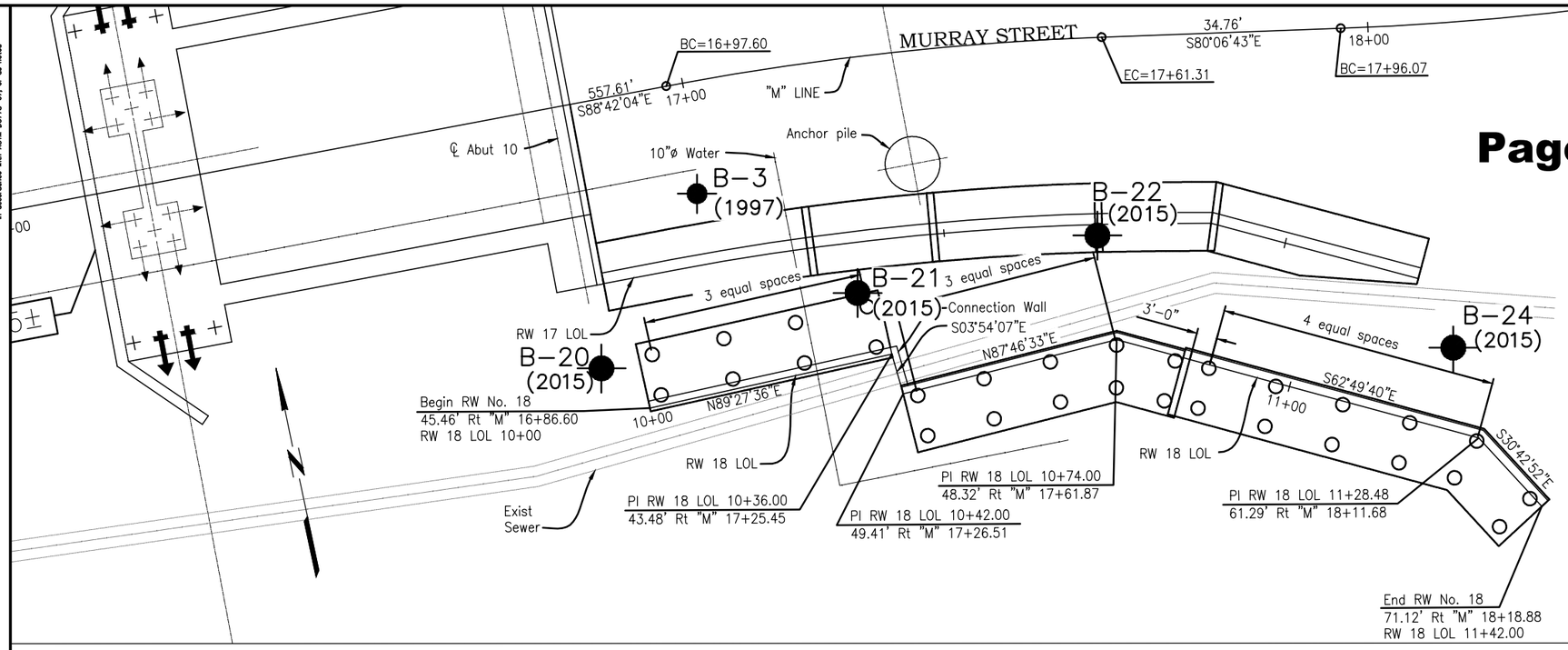

PLAN
1"=10'

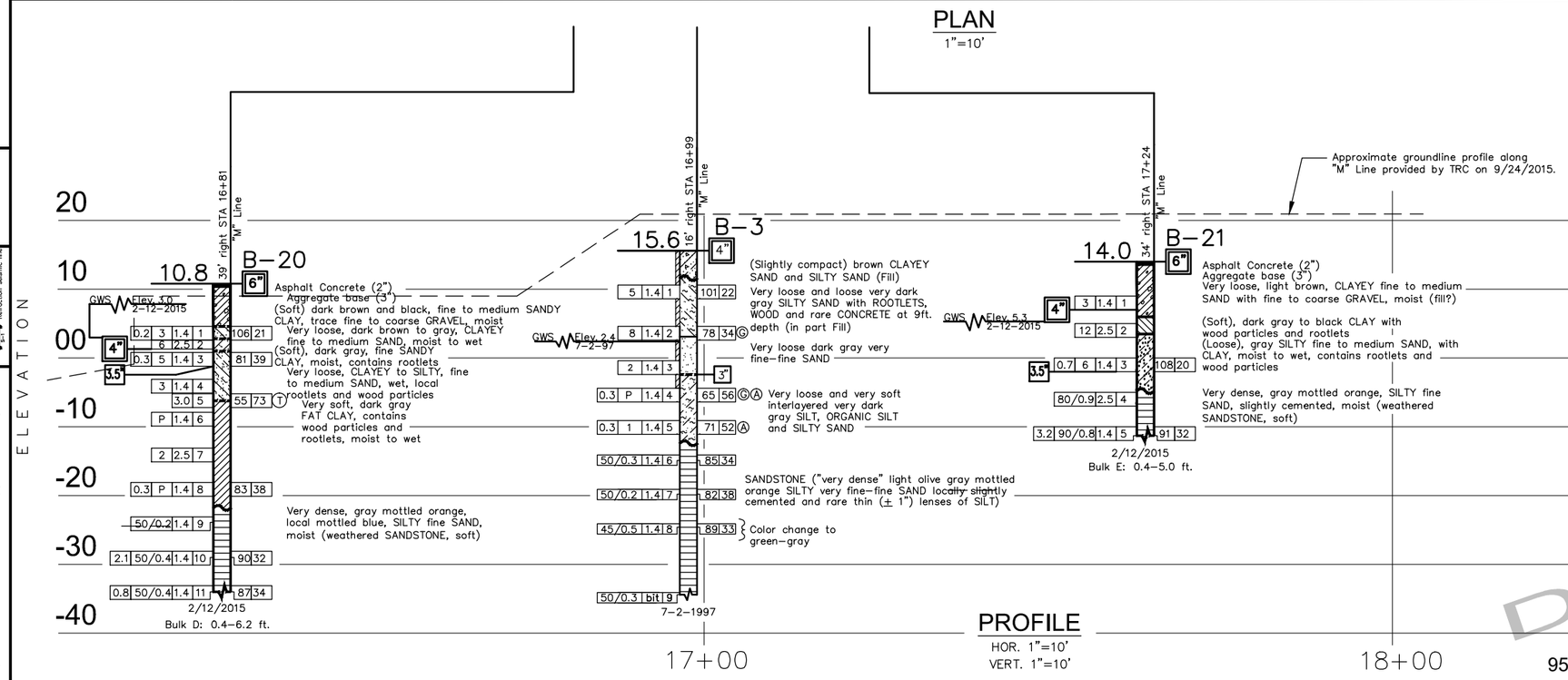

PROFILE
HOR. 1"=10'
VERT. 1"=10'

Draft

95% SUBMITAL NOT FOR CONSTRUCTION

DESIGN OVERSIGHT	DRAWN BY X. Vang	Amanda Kahn FIELD INVESTIGATOR	PREPARED FOR CITY OF SANTA CRUZ DEPARTMENT OF PUBLIC WORKS
SIGN OFF DATE	CHECKED BY A. Kahn	DATE February 2015	PROJECT ENGINEER

EXIS. BRIDGE NO. 36C-0108
POST MILE

Murray Street Bridge at Woods Lagoon

LOG OF TEST BORINGS RW No. 18-1

9/24/2015 2009-0272-2 LOTB RW#18.dwg

ORIGINAL SCALE IN INCHES FOR REDUCED PLANS 0 1 2 3

CU
EA

DISREGARD PRINTS BEARING EARLIER REVISION DATES

REVISION DATES (PRELIMINARY STAGE ONLY) SHEET ? OF ?

DIST.	COUNTY	ROUTE	POST MILES TOTAL PROJECT	SHEET NO.	TOTAL SHEETS
05	S			?	?

CERTIFIED ENGINEERING GEOLOGIST

PLANS APPROVAL DATE

WILLIAM E. NICHOLS No. 2229 CERTIFIED ENGINEERING GEOLOGIST STATE OF CALIFORNIA

TABER CONSULTANTS
3911 West Capitol Avenue
West Sacramento, CA 95691-2116
(916) 371-1690
JOB No. 2009-272-2 LOCATION: 36122-H1:186N;006W

TRC Companies, Inc.
10680 White Rock Road
Rancho Cordova, CA 95670
(916) 366-0632

NOTES:

1. Field classification of soils was in accordance with ASTM D 2488-09a "Description and Identification of Soils (Visual-Manual Procedure)".

2. Standard Penetration tests (SPTs) were performed in accordance with ASTM D 1586-11 using hammer operated with an automated drop system. Drill rods were 1 5/8-inch diameter "A"-rods; sampler was driven with brass liners. SPT hammer energy ratio (ETR) measurements indicate an ETR=104% as of 11/18/2014. For 1997 borings, Standard Penetration tests were performed in accordance with ASTM D 1586-84 using a safety hammer operated with cat-head, rope and pulley. Drill rods were 1-5/8" diameter "A"-rods; sampler was driven with brass liners.

3. The length of each sampled interval is shown graphically on the boring log. Whole number blow counts ("N") represent the "standard penetration resistance" interval in accordance with ASTM D1586-11. Where less than 1 foot of penetration is achieved, the blow count shown is for that fraction of the "standard penetration resistance" interval actually penetrated. Where indicated by an asterisk (*) the number of blows shown is for only that fraction of the initial 0.5 ft "seating drive" interval penetration. Material characteristics shown in ( ) where estimated.

4. Rock classification according to Bureau of Reclamation, U.S. Department of the Interior (USBR), "Engineering Geology Field Manual", and "Manual of Field Geology", (Compton, Robert R.). USBR field descriptor sheet is attached. Weathering, Rock Hardness/Strength, Bedding, and Fracture Density, as shown on this sheet, were used to describe all rock core from borings B-17B, B-18B, B-19, B-21, B-22, B-23, and B-25, drilled in 2015. Descriptors were determined in the field. REC = Core Recovered (percent). RQD = Rock Quality Designation (percent).

5. Groundwater surface elevations in the borings indicated on the "Log of Test Borings" sheets reflect the fluid level in the borings on the specified date. Groundwater surface elevations are subject to seasonal fluctuations and may occur at higher or lower elevations depending on the conditions at any particular time.

6. All CPTs were advanced per ASTM D 5778 procedures. Cones used for CPTs were Vertek 1.4 in diameter (10 cm2) pushed from a 20-ton rig or from a CME 55 Track Mounted rig (using auger anchors to provide a 20-ton reaction), respectively.

7. Probes were conducted in the channel by manually pushing a ¼-inch steel probe through the alluvium until essential "refusal" was realized.

8. Approximate boring elevations were surveyed by Taber Consultants in the field at the time of subsurface exploration and correlated to topographic survey provided by TRC.

9. Electronic media for plan view provided by TRC on 9/24/2015.

10. Ground line profile is estimated from topography provided by TRC on 9/24/2015.

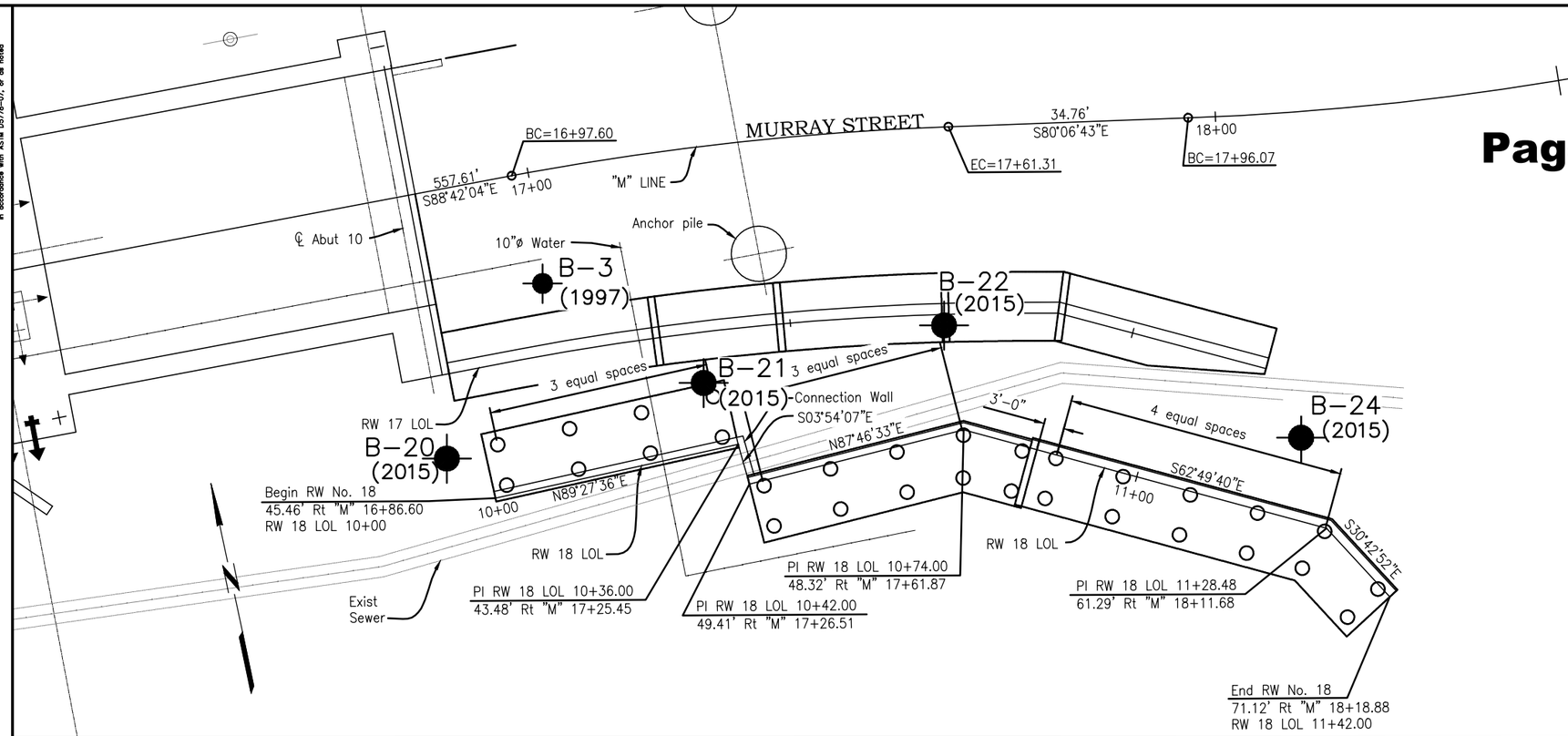

PLAN
1"=10'

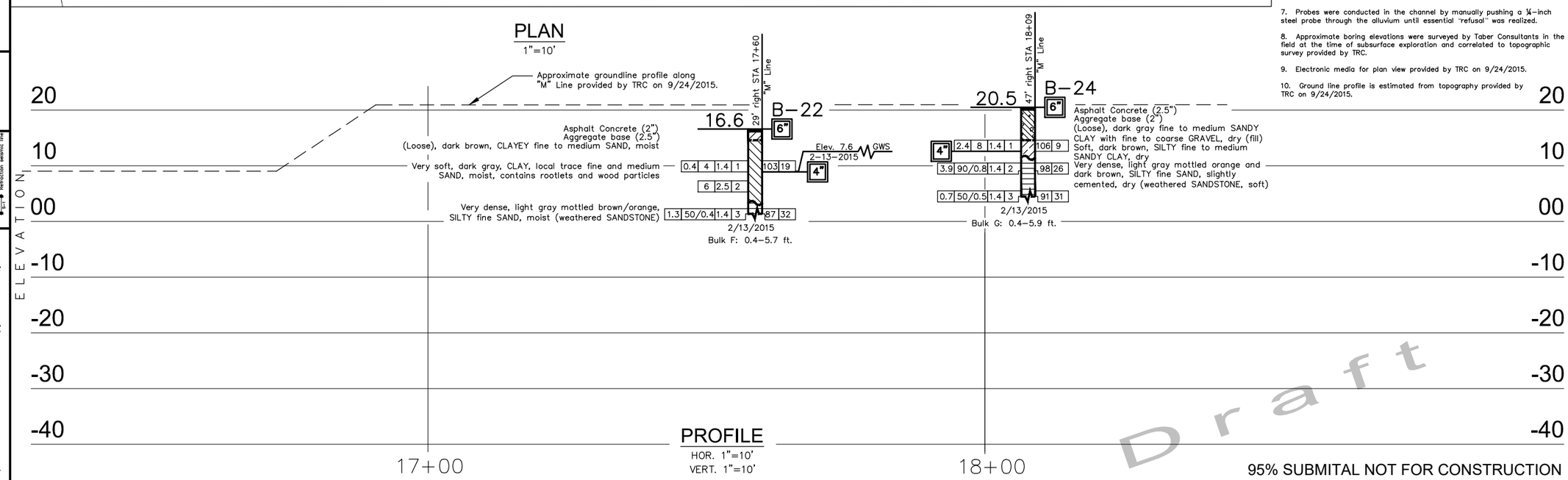

PROFILE
HOR. 1"=10'
VERT. 1"=10'

Draft

95% SUBMITAL NOT FOR CONSTRUCTION

LEGEND OF BORING OPERATIONS

LEGEND OF EARTH MATERIALS: GRAVEL, SAND, SILT, CLAY, SANDY CLAY or CLAYEY SAND, SANDY SILT or SILTY SAND, SILTY CLAY or CLAYEY SILT, PEAT and/or ORGANIC MATTER, FILL MATERIAL, IGNEOUS ROCK, SEDIMENTARY ROCK, METAMORPHIC ROCK

CONSISTENCY CLASSIFICATION FOR SOILS

According to the Standard Penetration Test	Granular	Cohesive
Standard Penetration "N" Value		
0-5	Very loose	Very soft
6-10	Loose	Soft
11-20	Semicompact	Stiff
21-35	Compact	Very stiff
36-70	Dense	Hard
>70	Very dense	Very hard

NOTE: Classification of earth material as shown on this sheet is based upon field inspection and is not to be construed to imply mechanical analysis.

DESIGN OVERSIGHT	DRAWN BY X. Vang	Amanda Kahn FIELD INVESTIGATOR	PREPARED FOR CITY OF SANTA CRUZ DEPARTMENT OF PUBLIC WORKS
SIGN OFF DATE	CHECKED BY A. Kahn	DATE February 2015	PROJECT ENGINEER

EXIS. BRIDGE NO. 36C-0108
POST MILE

Murray Street Bridge at Woods Lagoon

LOG OF TEST BORINGS RW No. 18-2

9/24/2015 2009-0272-2 LOTB RW#18.dwg

ORIGINAL SCALE IN INCHES FOR REDUCED PLANS 0 1 2 3

CU
EA

DISREGARD PRINTS BEARING EARLIER REVISION DATES

REVISION DATES (PRELIMINARY STAGE ONLY)

SHEET ? OF ?

MURRAY STREET BRIDGE SEISMIC RETROFIT PROJECT

Summary of Mitigation and Avoidance/Minimization Measures
and
Recommended Conditions of Approval and Construction Specifications

Introduction

All mitigation and avoidance/minimization measures that are included in the CEQA and NEPA documents are compiled in this summary and are numbered consecutively for ease of reference on the following pages. Where measures are included in several documents, they are only numbered once to avoid redundancy, but all measures are listed for completeness.

This Summary includes the following sections:

- Summary of Required Mitigation/Avoidance Measures by Timing of Implementation
- List of all Measures included in the CEQA and NEPA Documents
- The Initial Study Mitigation Monitoring Program

Summary of Required Measures/Implementation

I. CONDUCT PRE-CONSTRUCTION SURVEYS

- Roosting Bat Surveys: #2 (IS) as expanded with #28 (NES)
- Marine Mammal Surveys: #3 (IS) as expanded by #29 (MMMP-2)
- Nesting Bird Surveys: #6 (IS)
- Heron Rookery Nesting Surveys: #24 (NES) – starts about a month earlier than #6

II. INCLUDE MEASURES ON BRIDGE PLANS

- Bridge Lighting: #11 (IS)

III. INCLUDE MEASURES IN CONSTRUCTION SPECIFICATIONS

- Pile Driving Timing/Controls: #1 (IS) and expanded by #21 (NES)
- Pile Driving Limits to Protect Marine Mammals: #5 (IS) as expanded by #31 (MMMP-6)
- Pile Driving Specs & Bubble Curtain Use: #22 (NES)
- Marine Mammal Construction Buffers: #32 & 34 (MMMP-7&10)
- Marine Mammal Protection Measures During Construction: #33 (MMMP-8, 9)
- Erosion/Water Quality Control BMPs: #9 & 12 (IS)
- Measures If Archaeological Resources Encountered: #14 (IS)
- Noise Controls: #15 (IS)
- Noise Controls to Protect Birds: #25 (NES)
- Traffic Control Plan Preparation & Implementation: #16 (IS)
- Street Closure Restrictions: #17 (IS)
- Soil Testing: #8 (IS)
- Heritage Tree Protection Measures: #13 (IS)
- Water Traffic Controls: #19 (IS)

IV. COMPLETE PRIOR TO INITIATION OF CONSTRUCTION ACTIVITIES

- Remove Marine Mammal Resting Sites: #3 (IS)
- Remove Swallow Nests Prior to Nesting Season: #7 (IS)
- Remove Bat Roosting Crevices: #27 (NES)
- Notify Residents of Pile Driving Schedule: #10 (IS)
- Notify Emergency Providers of Street Closures: #18 (IS)
- Set up City-County "Oversight" Group regarding Traffic: #20 (IS)
- Worker Training For Marine Mammal Protection: #4 (IS)

V. BIOLOGICAL MONITORING DURING CONSTRUCTION

- Marine Mammal Daily Monitoring: #4-5 (IS) as expanded by #30 (MMMP-5) & #31 (MMMP-6)
- Marine Mammal Observations & Notifications: #35 (MMMP-11, 12, 13)
- Post-construction Marine Mammal Monitoring: #36 (MMMP-14)
- Daily Pelican Check: #23 (NES)
- Heron Rookery Monitor: #26 (NES)

Mitigation & Avoidance/Minimization Measures

INITIAL STUDY – January 2008

1. **MITIGATION MEASURE 1:** Conduct pile driving activities in Harbor waters from July 1 to mid-November, unless otherwise permitted by the National Marine Fisheries Service (NFS).

2. **MITIGATION MEASURE 2 (REV):** Conduct focused pre-construction surveys of the Murray Street bridge by a qualified biologist to determine if bats are roosting in the bridge's expansion joint crevices if bridge construction activities are scheduled during the breeding season of native bat species (April 1 through August 31), including the Hoary bat (*Lasiurus cinereus*). Bat roosting habitat in crevices will be sealed prior to the onset of bat reproductive season (April 1). If roosting habitat is not sealed prior to bat reproductive season, bat exclusion devices will be installed. If these actions do not result in exclusion, a qualified biologist in possession of an applicable Department of Fish and Game Memorandum of Understanding should remove and relocate the roosting bats to an appropriate alternate habitat (a roost with comparable spatial and thermal characteristics). Bat species may also roost and nest in abandoned swallow nests; therefore, the qualified biologist shall also conduct focused pre-construction inspections of all swallow nests to be removed. If occupied by bats, swallow nest removal should occur after young are capable of flying and prior to seasonal torpor (September 1 to October 31). Removal of nests previously occupied by bats should occur at night when bats have left to forage.

3. **MITIGATION MEASURE 3:** Remove known or potential marine mammal resting sites prior to construction based on the outcome of preconstruction survey to assess if and how marine mammals utilize the construction area of potential impact. This preconstruction monitoring will take place at least five days prior to the start of in-water construction. All ***known and*** potential resting***/haul-out*** sites that occur in the construction work area shall be removed beyond area of activity, ***preferably to a near-by location outside of the work area prior to construction***, either under the bridge or above. These sites could include floating docks (i.e. Dock FF) ***rubber docks*** or boats, such as those used by UCSC. (***Bold italicized text included in MMMP-3,***)

4. **MITIGATION MEASURE 4:** Require a qualified biological monitor be present during in water construction activities to search for target marine mammal species and halt project activities that could result in injury or mortality to these species. Prior to in-water construction, the approved monitor will conduct a workers training to instruct construction crews regarding ***the status and sensitivity of the target species in the area and the*** actions to be taken to avoid or minimize impacts in the event of a target species entering the in-water work area. (***Bold italicized text added in MMMP-4,***)

5. **MITIGATION MEASURE 5:** Prohibit pile driving activities within a 500-foot radius if marine mammals are present. This radius will be visibly flagged on the banks of the harbor during these activities. Each day prior to the commencement of pile-driving, the approved monitor will survey the buffer zone for marine mammals. If a marine mammal is detected, delay pile driving until the marine mammal(s) has moved beyond the buffer zone, verified by visual confirmation or lack of visual sighting within the next 15 minutes of the last sighting. If the animal should move back into the buffer zone after the commencement of pile-driving, no further work stoppage will be necessary. The buffer radius may be reduced based on a measurement of the distance the 160 db pressure travels in the underwater harbor waters. This would be determined using an approved acoustic monitoring device. The City of Santa Cruz would notify NMFS in writing of the proposed change in buffer zone area.

6. **MITIGATION MEASURE 6 (REV):** Require that a pre-construction survey for special-status nesting avian species (and other species protected under the Migratory Bird Treaty Act [MBTA]) be conducted within 72 hours of ~~at least 30 days prior to~~ the beginning of construction activities that occur during the nesting/breeding season (typically February through August ~~July~~) to assure that this area is not actively being used. If active nesting is not occurring, project construction activities may begin. If a nesting special-status bird is found during the survey, construction within 300 ~~100~~ feet of the special-status passerine and other MBTA-protected species nest sites shall be halted and should be postponed until after the bird has fledged or consultation with the California Department of Fish and Game be conducted to determine alternative measures or appropriate buffers with a minimum buffer of 250 feet for raptors and 100 feet for passerines. In the event that encroaching within these buffers is necessary (and is approved via consultation with CDFW), the following must be met for all species protected under the MBTA and California Fish and Game Code:

a) Ensure that noise levels at sensitive receptor sites (i.e., nests) are kept below 60 dB at all times, even when buffer adjustments are allowed under consultation with CDFW (i.e., encroachment within the 250- and 100-foot buffer may be allowed under consultation, if the 60 dB noise is demonstrated to be maintained).

b) Ensure that there is sufficient visual screening (via screens or sound barriers) to avoid disturbing nests

c) Have a trained biologist observer present at all times during authorized activities that require encroachment; the biologist should ensure that animals are not showing signs of distress, and if they do, the observer has the authority to halt work until it can safely continue.

d) Inform California Coastal Commission of buffer adjustments recommended by CDFW.

7. **MITIGATION MEASURE 7:** If project activities are to be initiated outside of the breeding season, remove existing nests and/or install exclusion netting under the bridge to prevent nesting for the season. Swallow nests should be removed from the bridge structure before the breeding season including the courtship period, usually January through July. Exclusion netting should be subsequently installed to prevent reestablishment of nest structures on the bridge infrastructure during construction.

8. **MITIGATION MEASURE 8:** In conformance with the recommendations of the Phase 1 Environmental Assessment, fill soils excavated from the west end of the bridge shall be tested for motor oil (with silica gel clean-up). Fill soils excavated from the east end of the bridge shall be tested for diesel, arsenic, motor oil (with silica gel clean-up), and lead (used in old paints). If motor oil is detected, soils shall be further tested for polychlorinated biphenyls (PCBs), due to the presence of a nearby transformer. Any contaminants found shall be treated and/or disposed of in conformance with all applicable regulations.

9. **MITIGATION MEASURE 9** Incorporate BMPS into construction specifications, including, but not limited to:

- Require all excavated soils, fill and construction materials be stored and contained in a designated area away from Harbor waters, and cover stockpiled soils to prevent release of sediments.
- Prohibit fueling, cleaning, or maintenance of equipment except in designated areas located as far from Harbor waters as possible. As a precaution, require contractor to maintain adequate materials onsite for containment and clean-up of any spills.
- Install temporary erosion and sedimentation control devices.

- Locate equipment and spoils in designated staging areas.
- Control of dewatering process to limit turbidity.
- Prepare and implement a Stormwater Pollution Prevention Plan that further details measures for erosion, sediment and water quality control.
- All fill material would be clean material that would meet applicable water quality standards.

10. **MITIGATION MEASURE 10:** Require that property owners and residents located within 150 feet of the pile installation locations be notified at least one week prior to construction.

11. **RECOMMENDED CONDITION OF APPROVAL:** Require all bridge lighting to be hooded and directed downward.

12. **RECOMMENDED CONSTRUCTION SPECIFICATION:** Require that all stockpiles of debris, soil and other materials which can become windblown be covered.

13. **RECOMMENDED CONDITION OF APPROVAL:** Implement measures to protect existing retained heritage trees in order to minimize damage to protected trees and their root zones during construction, including, but not limited to the following:

- Install construction fencing around the heritage trees to be retained to establish a zone sufficient for protection during construction to prevent inadvertent grading or disturbance/compaction by construction equipment; and
- Prohibit storage of materials, dumping of debris or construction equipment within tree protection zones.

14. **RECOMMENDED CONDITION OF APPROVAL:** If archaeological resources or human remains are discovered during construction, the City of Santa Planning and Community Development Department and Caltrans District 5 Environmental Planning Branch shall immediately be notified, work shall be halted within 50 meters (150 feet) of the find, and a qualified archaeologist shall assess its significance. If the find is determined to be significant, appropriate mitigation measures shall be formulated and implemented.

15. **RECOMMENDED CONDITION OF APPROVAL:**

- Require all stockpiling and vehicle staging areas and stationary noise-generating construction equipment to be located as far as possible from nearby residential areas as practicable.
- As part of construction specifications, require all equipment to be kept in good repair and fitted with superior quality mufflers. All equipment shall be properly maintained to assure that no additional noise, due to worn or improperly maintained parts, would be generated.
- Require the contractor to assure that mobile noise-generating equipment and machinery are shut off when not in use.

16. **RECOMMENDED CONSTRUCTION SPECIFICATION:** Prepare and implement a traffic control plan that includes: installation of signals on each side of the Murray Street bridge to allow controlled access for each direction; changing existing signal phasing as recommended in the traffic analysis; and implementation detours and advance warning signs to address delays.

17. **RECOMMENDED CONSTRUCTION SPECIFICATION:** To the extent possible, restrict any temporary lane closures on Murray Street to times outside peak traffic periods, which are generally 7-9 AM and 4-6 PM, and require implementation of traffic controls during times of lane closures consistent with provisions of a traffic control plan that includes a signal to control eastbound and westbound traffic during times of lane closures.

18. **RECOMMENDED CONSTRUCTION SPECIFICATION:** Provide advance notice to emergency providers of the construction schedule, lane/road closures on Murray Street, and potential traffic disruption.

19. **RECOMMENDED CONDITION OF APPROVAL:** Require water traffic controls, i.e. patrol/flagger, during periods when the boat channel must be reduced to one-way traffic, consistent with USCG bridge permit requirements.

20. **RECOMMENDATION:** [ADDED AS PART OF RESPONSE TO COMMENTS ON INITIAL STUDY] Establish a City-County oversight group to monitor and adjust, if necessary, the project's traffic control measures and to advise on the public information program in order to address temporary construction impacts.

NATURAL ENVIRONMENT STUDY – August 2010

➤ Steelhead Avoidance & Minimization Measures

21. Conduct pile driving activities in Harbor waters from July 1 to mid-November, outside the fish migration period, unless otherwise permitted by the National Marine Fisheries Service (NMFS). This applies to all pile driving activity, including installation of permanent bridge piles, harbor berth replacement piles, and temporary piles to support a construction trestle, if one is utilized, as well as removal of existing berth piles and removal of temporary trestle piles, if a construction trestle is erected. Criteria for extension of pile driving would include consideration of weather conditions. For example a low rainfall period in November and December could warrant extension to the beginning of January.

22. Pile Driving Specifications:

- Based on the geotechnical site characteristics, the permanent bridge piles will be partially or entirely vibrated into the Harbor substrate rather than driving them by means of "hammering". Vibratory pile driving does not generate peak sound pressure levels that cause direct impacts to fish species; ***a vibratory driver will be used for the dock piles and temporary trestle piles, if a construction trestle is erected.*** Vibratory pile driving does not generate peak sound pressure levels that cause direct impacts to fish species. (***Bold italicized text added from EFH,***)
- Pile driving activities that rely on impact hammers rather than vibratory techniques shall be designed to assure compliance with the interim criteria for Sound Exposure Levels (SEL) less or equal to 187 decibels (dB) in any single strike, and peak sound pressure less or equal to 208 dB in any single strike, measured at a distance of 32.8 feet from the source. In addition, to reduce sound pressure levels to the greatest extent feasible, a cushioning block between hammer and pile shall always be used.
- Bubble curtains shall be used at all piles driven by impact hammers.

-- THE FOLLOWING IS THE SAME AS Initial Study #9 and is not assigned a new number.

- Incorporate BMPs into construction specifications, including, but not limited to:
  - To protect water quality, require all excavated soils, fill and construction materials be stored and contained in a designated area away from Harbor waters, and cover stockpiled soils to prevent release of sediments.
  - Prohibit fueling, cleaning, or maintenance of equipment except in designated areas located as far from Harbor waters as possible. As a precaution, require contractor to maintain adequate materials onsite for containment and clean-up of any spills.
  - Install temporary erosion and sedimentation control devices.
  - Locate equipment and spoils in designated staging areas.
  - Control of dewatering process to limit turbidity.
  - Prepare and implement a Stormwater Pollution Prevention Plan that further details measures for erosion, sediment and water quality control.
  - All fill material would be clean material that would meet applicable water quality standards.

➤ Pelican Avoidance & Minimization Measures

23. If pelicans roost in the project area before construction activities have commenced for the day, construction activities will not begin until the bird/s have flushed. Workers will not engage in harassment of the bird/s or any activity to encourage flushing. If a pelican or group of pelicans enters the project area once construction activities have begun for the day, no further avoidance efforts are required.

➤ Great Blue Heron & Egret Avoidance & Minimization Measures

24. (REV) Require that a pre-construction survey be conducted at least 30 days prior to the beginning of construction activities that occur during the heron breeding season (typically late December through mid-June) to determine if active nesting is occurring at the heron rookery. If active nesting is not occurring, project construction activities may begin. If active nests are observed, construction activities will not occur until young have fledged or an appropriate buffer zone is established by a qualified biologist in consultation with resource agencies as needed <u>with a minimum buffer of 250 feet for raptors and 100 feet for passerines. In the event that encroaching within these buffers is necessary (and is approved via consultation with CDFW), the following must be met for all species protected under the MBTA and California Fish and Game Code:</u>

a) <u>Ensure that noise levels at sensitive receptor sites (i.e., nests) are kept below 60 dB at all times, even when buffer adjustments are allowed under consultation with CDFW (i.e., encroachment within the 250 and 100 foot buffer may be allowed under consultation, if the 60 dB noise is demonstrated to be maintained).</u>

b) <u>Ensure that there is sufficient visual screening (via screens or sound barriers) to avoid disturbing nests</u>

c) <u>Have a trained biologist observer present at all times during authorized activities that require encroachment; the biologist should ensure that animals are not showing signs of distress, and if they do, the observer has the authority to halt work until it can safely continue.</u>

d) <u>Inform California Coastal Commission of buffer adjustments recommended by CDFW.</u>

25. Noise controls will be implemented at the source:

- Operations will be conducted to avoid noisiest construction activities (pile driving) during breeding season.
- Modern and quieter alternate equipment will be used.
- Equipment will be operated at lowest possible power levels.

26. A biological monitor will be on-site during nesting season to observe the rookery. If it appears that project activities may cause nest abandonment or disruption of breeding, even with noise reducing controls implemented, project activities must cease until the young are able to fly well or Caltrans and the USFWS has been consulted and additional measures taken to protect the heron rookeries.

➤ Western Gull & Swallows Avoidance & Minimization Measures

-- THE FOLLOWING IS THE SAME AS Initial Study #6 and is not assigned a new number.

- Require that a pre-construction survey for nesting avian species (and other species protected under the Migratory Bird Act) be conducted at least 30 days prior to the beginning of construction activities that occur during the nesting/breeding season (typically February through July) to assure that this area is not actively being used. If active nesting is not occurring, project construction activities may begin. If a nesting special-status bird is found during the survey, construction within 100 feet of the nest site should be postponed until after the bird has fledged or consultation with the California Department of Fish and Game be conducted to determine alternative measures or appropriate buffers.

-- THE FOLLOWING IS THE SAME AS Initial Study #7 and is not assigned a new number.

- If project activities are to be initiated outside of the breeding season, existing nests under the bridge will be removed and exclusion netting installed under the bridge to prevent nesting for the season. Nests will be removed from the bridge structure before the breeding season including the courtship period, usually January through July. Exclusion netting will be subsequently installed to prevent re-establishment of nest structures on the bridge infrastructure during construction.

➤ Bats Avoidance & Minimization Measures

27. (REV) Bat roosting habitat in crevices will be sealed or bat exclusion devices installed prior to the onset of bat reproductive season (April 1). <u>Swallow nests, which could be occupied by the same species roosting in crevices, should only be removed after a thorough nest inspection. If occupied, nest removal should occur after young are capable of flying and prior to seasonal torpor (September 1 to October 31). Removal of nests previously occupied by bats should occur at night when bats have left to forage.</u>

28. (REV) For construction activities scheduled during bat reproductive season (April 1 – August31) or winter roost season (October 15 – February 15), a qualified biologist will conduct focused pre-construction surveys of the Murray Street Bridge, no more than 30 days prior to the initiation of project activities to determine if bats are roosting in the bridge's expansion joint crevices. If no bats are found, no further mitigation would be necessary. If roosting bats are found, delay project activities until roosting bats have vacated the crevices, ~~or~~ juvenile bats have fledged, ~~or~~ install bat exclusion devices (by a qualified biologist) between February 15 and April 15 or between September 15 and October 15, outside of bat reproductive and winter roost seasons, <u>or maintain adequate</u>

buffers recommended by Caltrans as shown below[1]. A qualified monitor will document the effectiveness of the exclusion devices to ensure that all roosting bats have vacated the roost prior to initiation of construction.

Table 7-1. Recommended Disturbance Buffer Zones for Day and Night Roosts

Bat Species	Distance (in feet) between Activity/Equipment and Roosts					
	Construction Trucks and Heavy Equipment*	Small Vehicles	Drilling, Trenching, and Small Equipment	Light Source without Shielding	Pedestrian Traffic	Stationary Diesel/ Gasoline Exhaust Sources >2 minutes
Pallid bat, Townsend's big-eared bat	120	90	150	400	65	250
Other species of bats in California	100	65	150	300	65	250
Yuma myotis, Mexican free-tailed bat	90	65	150	250	65	250

*See Caltrans (2016) for detailed discussions of noise impacts to bats at transportation projects and specific dB levels of low frequency values for construction trucks and heavy equipment.

Biological Assessment – July 2010

➤ Steelhead Avoidance & Minimization Measures

-- THE FOLLOWING IS THE SAME AS NES #21 and is not assigned a new number.

- Conduct pile driving activities in Harbor waters from July 1 to mid-November, unless otherwise permitted by the National Marine Fisheries Service (NMFS). This applies to all pile driving activity, including installation of permanent bridge piles, harbor berth replacement piles, and temporary piles for a construction trestle, if one is utilized, as well as removal of existing berth piles and removal of temporary trestle piles, if a construction trestle is erected. Criteria for extension of pile driving would include consideration of weather conditions. For example a low rainfall period in November and December could warrant extension to the beginning of January.

-- THE FOLLOWING IS THE SAME AS NES #22 and is not assigned a new number.

- Based on the geotechnical site characteristics, permanent bridge piles will be partially or entirely vibrated into the Harbor substrate rather than driving them by means of "hammering". Vibratory pile driving does not generate peak sound pressure levels that cause direct impacts to fish species.

[1] HT Harvey and Associates in collaboration with HDR, Inc. July 2019. Final. Caltrans Bat Mitigation: A Guide to Developing Feasible and Effective Solutions. Prepared for California Department of Transportation, Division of Environmental Analysis, Office of Biological Studies.

- Pile driving activities that rely on impact hammers rather than vibratory techniques shall be designed to assure compliance with the interim criteria for Sound Exposure Levels (SEL) less or equal to 187 decibels (dB) in any single strike, and peak sound pressure less or equal to 208 dB in any single strike, measured at a distance of 32.8 feet from the source. In addition, to reduce sound pressure levels to the greatest extent feasible, a cushioning block between hammer and pile shall always be used.

- Bubble curtains shall be used at all piles driven by impact hammers.

-- THE FOLLOWING IS THE SAME AS Initial Study #9 and is not assigned a new number.

- Incorporate BMPS into construction specifications, including, but not limited to:
  - To protect water quality, require all excavated soils, fill and construction materials be stored and contained in a designated area away from Harbor waters, and cover stockpiled soils to prevent release of sediments.
  - Prohibit fueling, cleaning, or maintenance of equipment except in designated areas located as far from Harbor waters as possible. As a precaution, require contractor to maintain adequate materials onsite for containment and clean-up of any spills.
  - Install temporary erosion and sedimentation control devices.
  - Locate equipment and spoils in designated staging areas.
  - Control of dewatering process to limit turbidity.
  - Prepare and implement a Stormwater Pollution Prevention Plan that further details measures for erosion, sediment and water quality control.
  - All fill material would be clean material that would meet applicable water quality standards.

Essential Fish Habitat Assessment – July 2010

-- THE FOLLOWING IS THE SAME AS NES # 22and is not assigned a new number.

- Based on the geotechnical site characteristics, the permanent bridge piles will be partially or entirely vibrated into the Harbor substrate rather than driving them by means of "hammering"; ***a vibratory driver will be used for the dock piles and temporary trestle piles, if a construction trestle is erected.*** Vibratory pile driving does not generate peak sound pressure levels that cause direct impacts to fish species.

-- THE FOLLOWING IS THE SAME AS NES #22 and is not assigned a new number.

- Pile driving activities that rely on impact hammers rather than vibratory techniques shall be designed to assure compliance with the interim criteria for Sound Exposure Levels (SEL) less or equal to 187 decibels (dB) in any single strike, and peak sound pressure less or equal to 208 dB in any single strike, measured at a distance of 32.8 feet from the source. In addition, to reduce sound pressure levels to the greatest extent feasible, a cushioning block between hammer and pile shall always be used.
- Bubble curtains shall be used at all piles driven by impact hammers.

-- THE FOLLOWING IS THE SAME AS Initial Study #9 and is not assigned a new number.

- Incorporate Best Management Practices (BMPs) into construction specifications, including, but not limited to:
  - To protect water quality, require all excavated soils, fill and construction materials be stored and contained in a designated area away from Harbor waters, and cover stockpiled soils to prevent release of sediments.

- Prohibit fueling, cleaning, or maintenance of equipment except in designated areas located as far from Harbor waters as possible. As a precaution, require contractor to maintain adequate materials onsite for containment and clean-up of any spills.
- Install temporary erosion and sedimentation control devices.
- Locate equipment and spoils in designated staging areas.
- Control of dewatering process to limit turbidity.
- Prepare and implement a Stormwater Pollution Prevention Plan (SWPPP) that further details measures for erosion, sediment and water quality control.
- All fill material would be clean material that would meet applicable water quality standards.

Marine Mammal Mitigation Plan (MMMP) – July 2010

The following mitigation measures will be implemented to avoid or minimize potential project-related effects to southern sea otters, eastern Pacific harbor seals, and California sea lions. The term "target species" will be used below when referring to all these species collectively. Caltrans will initiate consultation with USFWS regarding potential harassment of southern sea otters during in-water construction activities to determine the need for additional project conditions. Caltrans will submit an application for an Incidental Harassment Authorization to NMFS for potential harassment of southern sea otters, eastern Pacific harbor seals and California sea lions during in-water construction activities.

THE FOLLOWING MEASURES RETAIN THE NUMBERING SYSTEM IN THE MMMP; NEW MEASURES ARE ASSIGNED NEW CONSECUTIVE NUMBERS.

-- THE FOLLOWING IS THE SAME AS IS#1 and is not assigned a new number.

1. Timing of Pile Driving. In-water pile-driving activities in Harbor waters will be limited to the period of July 1 to mid-November, unless otherwise permitted by the National Marine Fisheries Service (NMFS).

29. 2. Pre-Construction Monitoring. Prior to initiation of in-water construction, a qualified biological monitor, approved by the National Marine Fisheries Service, will conduct monitoring of marine mammals to update existing information on the animals' occurrence in and near the project area, their movement patterns, and their use of any haul-out sites. This preconstruction monitoring will take place at least five days prior to the start of in-water construction and will cover a period of at least one week (with at least 5 days of actual observation over a period of 4 hours each day), 2 hours in the morning at the time that construction activities would begin and 2 hours at midday, when construction activities would resume after a lunch break.

-- THE FOLLOWING IS THE SAME AS IS#3 and is not assigned a new number; bold italicized text added to IS #3.

3. Pre-Construction Removal of Haul-out Sites. All known and potential haul-out sites that occur in the construction work area shall be removed, preferably to a near-by location outside of the work area prior to construction. These sites could include floating docks (i.e. Dock FF), ***rubber docks*** or boats, such as those used by UCSC.

-- THE FOLLOWING IS THE SAME AS IS#3 and is not assigned a new number; bold italicized text added to IS #4.

4. Pre-Construction Workers Training. Prior to in-water construction, the approved monitor will conduct a workers training to instruct construction crews ***regarding the status and sensitivity***

of the target species in the area and the actions to be taken to avoid or minimize impacts in the event of a target species entering the in-water work area.

30. 5. In-Water Construction Biological Monitoring. The qualified biological monitor will be present during in-water construction activities to search for target marine mammal species and halt project activities that could result in injury or mortality to these species [an estimated 8 hour/day (or for the duration of in-water construction activities each day) during the estimated 10 months of in-water activities plus an additional 16 days of on-land pile driving]. Each day, before pile driving (or other loud in-water construction activity) begins, the monitor will survey the buffer zone for marine mammals. The monitor will also scan for target species throughout the project vicinity, i.e., the areas adjacent to the project site and buffer zone.

31. 6. Establish Buffer Area. The commencement of pile driving activities will be delayed if marine mammals are present within a 500-foot radius of the work area. This 500-foot radius is based on pile-driving activities for similar projects (Sandholt Bridge) and on the feasibility of monitoring the area for animals entering the Harbor from the open waters of the Monterey Bay. The buffer radius may be reduced or increased based on a measurement of the distance the 160 db pressure travels in the underwater harbor waters and/or through the air. This radius will be visibly flagged on the banks of the harbor during these activities. Each day prior to the start of pile-driving, the approved monitor will survey the buffer zone for marine mammals. If a marine mammal is detected, pile driving will be delayed until the marine mammal(s) has moved beyond the buffer zone, verified by visual confirmation or lack of visual sighting within the next 15 minutes of the last sighting, to assume that the animal has moved beyond the buffer zone. If the animal should move back into the buffer zone after the commencement of pile-driving, no further work stoppage will be necessary, unless the animal comes within an unsafe distance of the work area that may result in injury to the animal. At this point, work will cease to avoid physical injury to the animal. This distance will be determined by USFWS and/or NMFS. The monitor will record the species, numbers and behaviors of any animal(s) entering the buffer zone after commencement of work and notify Caltrans, NMFS (regarding harbor seals or California sea lions) or USFWS (regarding sea otters) via telephone and in writing within 48 hours. The monitor will also submit a written description of the event to Caltrans (and in turn NMFS or USFWS, as applicable) within 7 days.

32. 7. Buffer Changes – Acoustical Monitoring. The buffer radius may be reduced or increased based on a measurement of the distance the 160 db pressure travels in the underwater harbor waters and/or through the air. This would be determined using approved in-water and in-air acoustic monitoring devices. The City of Santa Cruz shall notify Caltrans in writing of the proposed change in buffer zone area, who in turn will notify NMFS. An approved biological monitor will operate the monitoring devices during pile driving and any other loud construction activities, such as bridge demolition or use of hydraulic tools. The devices, placed at the determined buffer, will produce acoustic data for the duration of noise-producing activities. An alarm would alert the monitor to sound levels approaching 160 db.

33. 8. ~~No disturbance or noise will be used to encourage the movement of the target species from the work area. The City will contact USFWS and NMFS to determine the best approach for exclusion of the target species from the in-water work area.~~ Underwater Acoustical Monitoring-Use of Vibratory Pile Driving Equipment. The contractor will be allowed to use vibratory driving if the contractor can demonstrate, by underwater monitoring conducted during actual pile driving, that the 120 dB vibratory threshold will not be exceeded within 1,000 meters of pile driving. If this cannot be achieved, the contractor will be then required to use impact driving

only and limit measured sound levels to 160 dB or less at 1,000 meters. The distance from the bridge to the breakwater is about 780 meters. This means that the impact distance will extend about 120 meters into Monterey Bay.

34. 9. Disturbance Prohibition. No disturbance or noise will be used to encourage the movement of the target species from the work area. The City of Santa Cruz will contact Caltrans, USFWS, and NOAA Fisheries to determine the best approach for exclusion of the target species from the in-water work area.

35. 10. Disturbance Prohibition. No intentional hazing will be used on eastern Pacific harbor seals, California sea lions, southern sea otters, or other state- or federally-listed threatened or endangered species. The City will contact the Caltrans, USFWS and CDFG if sea otters begin to occur in the vicinity of the bridge work, to determine whether any changes to this mitigation plan may be required.

36. 11. Non-Pile Driving Construction Buffer. Other in-water construction activities, such as the use of heavy equipment to construct bridge abutments (i.e., activities not involving loud, impulsive hammering sounds) will generate noise levels equivalent to that of a diesel truck. For these activities, a 50-foot radius buffer zone will be established. This buffer zone will be clearly marked by highly visible stakes securely placed into the banks. Each day, before construction begins, the monitor will search the 50-foot radius for marine mammals. If a marine mammal is sighted within the buffer zone, the monitor will require the contractor to delay in-water construction activities until the monitor determines that no marine mammals are present within the buffer area.

37. 12. Construction Monitoring Records. The approved biological monitor will keep a record of all observations of the target species. The information on each observation will include: a) species identification and approximate number of animals observed; b) age and sex class of each animal (if possible); c) activity and direction of movement; d) ongoing project activities at the time of observation; e) responses of target species to project activities; f) any unusual behavior or circumstances observed (project- or non-project related); and g) location, date and time of each observation. Summary monitoring reports will be submitted to Caltrans, who will forward reports to NOAA Fisheries and USFWS by December 31 of each year that in-water construction activities take place.

38. 13 Notification of Injury. In the event that the monitor determines that a marine mammal has been injured by project activities, all work shall cease and Caltrans shall be notified. Caltrans will consult with NMFS and/or USFWS to determine if additional measures are necessary. Work may resume upon notification by Caltrans.

39. 14. Post-Construction Replacement of Haul-out Areas. All known and potential haul-out sites that were removed from the work area prior to construction will be returned to their approximate location.

40. 15. Post-Construction Monitoring. Post-construction monitoring will be conducted to determine if harbor seals resume their use of Dock F and FF as primary haul-out sites. NMFS may require additional project conditions, to be applied depending on the outcome of post-construction monitoring.

Initial Study Mitigation Monitoring Program

1. **Pre-Construction Surveys.** The following actions are required for mitigation measures # 2 and 7 as outlined below. It is the responsibility of the City to hire a qualified biologist and complete work in accordance with the specifications contained in the measures.

   - **Specific Actions Needed for Implementation:** Actions are specified in the measure.
   - **Staff or Agency Responsible for Implementation:** The City of Santa Cruz Public Works Department is responsible for hiring a qualified biologist to conduct pre-construction surveys in accordance with provisions outlined in the measure.
   - **Timing of Implementation:** To be completed prior to construction or during construction as outlined in the measure.
   - **Timing of Monitoring or Reporting:** Report upon completion of surveys and prior to construction.

     Mitigation Measure 2: *Conduct focused pre-construction surveys of the Murray Street bridge by a qualified biologist to determine if bats are roosting in the bridge's expansion joint crevices if bridge construction activities are scheduled during the breeding season of native bat species (April 1 through August 31). Bat roosting habitat in crevices will be sealed prior to the onset of bat reproductive season (April 1). If roosting habitat is not sealed prior to bat reproductive season, bat exclusion devices will be installed. If these actions do not result in exclusion, a qualified biologist in possession of an applicable Department of Fish and Game Memorandum of Understanding should remove and relocate the roosting bats to an appropriate alternate habitat (a roost with comparable spatial and thermal characteristics).*

     Mitigation Measure 6: *Require that a pre-construction survey for special-status nesting avian species (and other species protected under the Migratory Bird Act) be conducted at least 30 days prior to the beginning of construction activities that occur during the nesting/breeding season (typically February through July) to assure that this area is not actively being used. If active nesting is not occurring, project construction activities may begin. If a nesting special-status bird is found during the survey, construction within 100 feet of the nest site should be postponed until after the bird has fledged or consultation with the California Department of Fish and Game is conducted to determine alternative measures or appropriate buffers.*

2. **Construction Specifications.** The following actions are required for mitigation measure #1, 3-6, 8-11 as outlined below., which can be incorporated into the Construction Specifications on the project plans. The consulting project engineer shall review plans and construction specifications to insure that these measures have been incorporated into the construction specifications.
   - **Specific Actions Needed for Implementation:** Actions are specified in the measure.
   - **Staff or Agency Responsible for Implementation:** The City of Santa Cruz Public Works Department or designated engineer is responsible for including measure on project plans and/or in construction specifications.
   - **Timing of Implementation:** Measure to be included in project plans and construction specifications with monitoring during construction as outlined in measures 5 and 6.

     Mitigation Measure 1: *Conduct pile driving activities in Harbor waters from July 1 to mid-November, unless otherwise permitted by the National Marine Fisheries (NFS).*

MITIGATION MEASURE 3: *Remove known or potential marine mammal resting sites prior to construction based on the outcome of preconstruction survey to assess if and how marine mammals utilize the construction area of potential impact. This preconstruction monitoring will take place at least five days prior to the start of in-water construction. All potential resting sites that occur in the construction work area shall be removed beyond area of activity, either under the bridge or above. These sites could include floating docks (i.e. Dock FF) or boats, such as those used by UCSC.*

MITIGATION MEASURE 4: *Require a qualified biological monitor be present during in water construction activities to search for target marine mammal species and halt project activities that could result in injury or mortality to these species. Prior to in-water construction, the approved monitor will conduct a workers training to instruct construction crews regarding actions to be taken to avoid or minimize impacts in the event of a target species entering the in-water work area.*

MITIGATION MEASURE 5: *Prohibit pile driving activities within a 500-foot radius if marine mammals are present. This radius will be visibly flagged on the banks of the harbor during these activities. Each day prior to the commencement of pile-driving, the approved monitor will survey the buffer zone for marine mammals. If a marine mammal is detected, delay pile driving until the marine mammal(s) has moved beyond the buffer zone, verified by visual confirmation or lack of visual sighting within the next 15 minutes of the last sighting. If the animal should move back into the buffer zone after the commencement of pile-driving, no further work stoppage will be necessary. The buffer radius may be reduced based on a measurement of the distance the 160 db pressure travels in the underwater harbor waters. This would be determined using an approved acoustic monitoring device. The City of Santa Cruz would notify NMFS in writing of the proposed change in buffer zone area. No disturbance or noise will be used to encourage the movement of the target species from the work area. The City will contact the appropriate authorities to determine the best approach for exclusion of the target species from the in-water work area.*

MITIGATION MEASURE 7: *If project activities are to be initiated outside of the breeding season, remove existing nests and/or install exclusion netting under the bridge to prevent nesting for the season. Swallow nests should be removed from the bridge structure before the breeding season including the courtship period, usually January through July. Exclusion netting should be subsequently installed to prevent reestablishment of nest structures on the bridge infrastructure during construction. 7*

MITIGATION MEASURE 8: *In conformance with the recommendations of the Phase 1 Environmental Assessment, fill soils excavated from the west end of the bridge shall be tested for motor oil (with silica gel clean-up). Fill soils excavated from the east end of the bridge shall be tested for diesel, arsenic, motor oil (with silica gel clean-up), and lead (used in old paints). If motor oil is detected, soils shall be further tested for polychlorinated biphenyls (PCBs), due to the presence of a nearby transformer. Any contaminants found shall be treated and/or disposed of in conformance with all applicable regulations.*

MITIGATION MEASURE 9: *Incorporate BMPS into construction specifications, including, but not limited to:*

- *Require all excavated soils, fill and construction materials be stored and contained in a designated area away from Harbor waters, and cover stockpiled soils to prevent release of sediments.*
- *Prohibit fueling, cleaning, or maintenance of equipment except in designated areas located as far from Harbor waters as possible. As a precaution, require contractor to maintain adequate materials onsite for containment and clean-up of any spills.*
- *Install temporary erosion and sedimentation control devices.*
- *Locate equipment and spoils in designated staging areas.*

- *Control of dewatering process to limit turbidity.*
- *Prepare and implement a Stormwater Pollution Prevention Plan that further details measures for erosion, sediment and water quality control.*
- *All fill material would be clean material that would meet applicable water quality standards.*

MITIGATION MEASURE 10: *Require that property owners and residents located within 150 feet of the pile installation locations be notified at least one week prior to construction.*

3. The following recommendations are included in the Initial Study and should also be incorporated into the Construction Specifications on the project plans.
   - ***RECOMMENDED CONDITION OF APPROVAL:*** *Require all bridge lighting to be hooded and directed downward.*
   - ***RECOMMENDED CONSTRUCTION SPECIFICATION:*** *Require that all stockpiles of debris, soil and other materials which can become windblown be covered.*
   - ***RECOMMENDED CONDITION OF APPROVAL:*** *Implement measures to protect existing retained heritage trees in order to minimize damage to protected trees and their root zones during construction, including, but not limited to the following:*
     - *Install construction fencing around the heritage trees to be retained to establish a zone sufficient for protection during construction to prevent inadvertent grading or disturbance/compaction by construction equipment; and*
     - *Prohibit storage of materials, dumping of debris or construction equipment within tree protection zones.*
   - ***RECOMMENDED CONDITION OF APPROVAL:*** *If archaeological resources or human remains are discovered during construction, the City of Santa Planning and Community Development Department and Caltrans District 5 Environmental Planning Branch shall immediately be notified, work shall be halted within 50 meters (150 feet) of the find, and a qualified archaeologist shall assess its significance. If the find is determined to be significant, appropriate mitigation measures shall be formulated and implemented.*
   - ***RECOMMENDED CONDITION OF APPROVAL:*** *Require all stockpiling and vehicle staging areas and stationary noise-generating construction equipment to be located as far as possible from nearby residential areas as practicable.*
   - ***RECOMMENDED CONDITION OF APPROVAL:*** *As part of construction specifications, require all equipment to be kept in good repair and fitted with superior quality mufflers. All equipment shall be properly maintained to assure that no additional noise, due to worn or improperly maintained parts, would be generated.*
   - ***RECOMMENDED CONDITION OF APPROVAL:*** *Require the contractor to assure that mobile noise-generating equipment and machinery are shut off when not in use.*
   - ***RECOMMENDED CONSTRUCTION SPECIFICATION:*** *Prepare and implement a traffic control plan that includes: installation of signals on each side of the Murray Street bridge to allow controlled access for each direction; changing existing signal phasing as recommended in the traffic analysis; and implementation detours and advance warning signs to address delays.*
   - ***RECOMMENDED CONSTRUCTION SPECIFICATION:*** *To the extent possible, restrict any temporary lane closures on Murray Street to times outside peak traffic periods, which are generally 7-9 AM and 4-6 PM, and require implementation of traffic controls during times of lane closures consistent with provisions of a traffic control plan that includes a signal to control eastbound and westbound traffic during times of lane closures.*
   - ***RECOMMENDED CONSTRUCTION SPECIFICATION:*** *Provide advance notice to emergency providers of the construction schedule, lane/road closures on Murray Street, and potential traffic disruption.*
   - ***RECOMMENDED CONDITION OF APPROVAL:*** *Require water traffic controls, i.e. patrol/flagger, during periods when the boat channel must be reduced to one-way traffic, consistent with U.S. Coast Guard (USCG) bridge permit requirements.*