CALIFORNIA COASTAL COMMISSION
South Coast Area Office
301 East Ocean Blvd., Suite 300
Long Beach, CA 90802
(562) 590-5071

W8b

5-21-0797
(Orange County Public Works)
May 11, 2022

EXHIBITS

Exhibit 1 – Vicinity Map
Exhibit 2 – Project Plans
Exhibit 3 – Bridge Photos
Exhibit 4 - Cofferdam Location
Exhibit 5 – Construction Staging
Exhibit 6 – Vegetation Communities/Land Cover Types Map
Exhibit 7 – Locations of Talbert Regional Park and Talbert Nature Preserve
Exhibit 8 – Photo of Bridge Deck

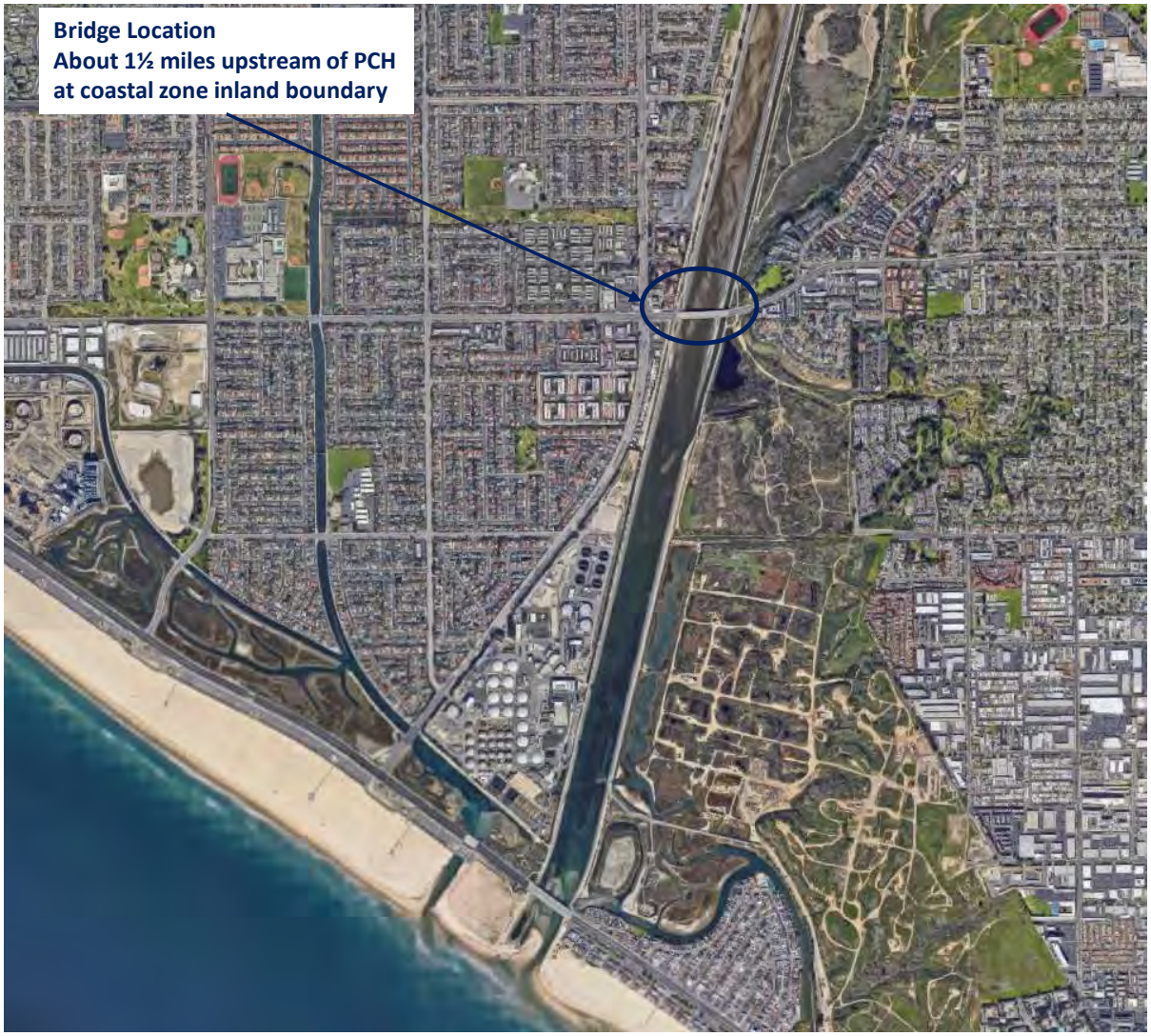

5-21-0797 OCPW
Hamilton Victoria Bridge Repair
Santa Ana River
Exhibit 1

County of Orange

OC PublicWorks

SANTA ANA, CALIFORNIA

JAMES TREADAWAY, DIRECTOR

PLANS FOR CONSTRUCTION OF

HAMILTON AVE / VICTORIA ST OVER SANTA ANA RIVER & GREENVILLE BANNING CHANNEL BRIDGE MAINTENANCE AND REPAIR

BR. No. 55C-0103

W.O. NO. EQ 20588

SEPTEMBER 2021

FUNDED BY: SENATE BILL 1(SB-1)

MAINTAINED BY: COUNTY OF ORANGE AND CITY OF COSTA MESA

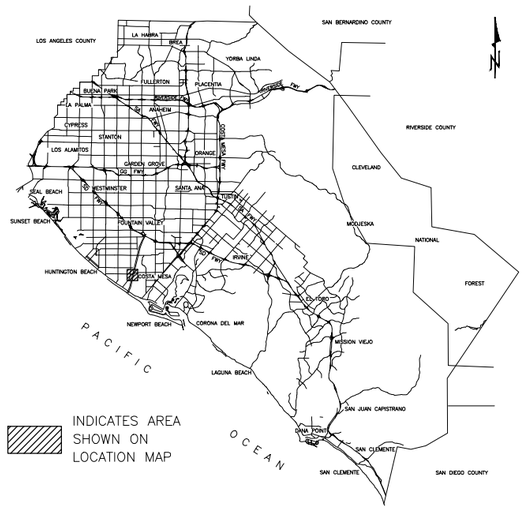

VICINITY MAP
(NOT TO SCALE)

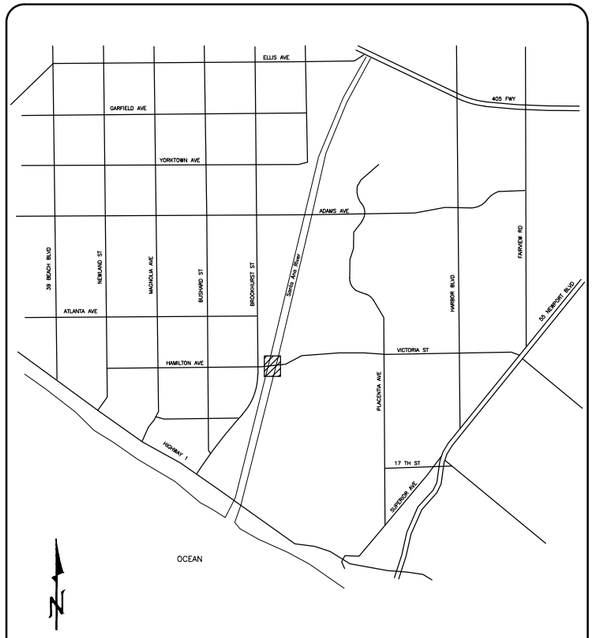

LOCATION MAP
(NOT TO SCALE)

INDEX OF SHEETS

SHEET	REF	DESCRIPTION
1	T1	TITLE SHEET
2	TH1	TRAFFIC HANDLING DETAILS NO. 1
3	TH2	TRAFFIC HANDLING DETAILS NO. 2
4	TH3	TRAFFIC HANDLING DETAILS NO. 3
5	TH4	TRAFFIC HANDLING DETAILS NO. 4
6	TH5	TRAFFIC HANDLING DETAILS NO. 5
7	S1	GENERAL PLAN
8	S2	PIER REPAIR DETAILS NO. 1
9	S3	PIER REPAIR DETAILS NO. 2
10	S4	ABUTMENT REPAIR DETAILS NO. 1
11	S5	ABUTMENT REPAIR DETAILS NO. 2
12	S6	ABUTMENT REPAIR DETAILS NO. 3
13	S7	SIDEWALK JOINT ARMOR

2018 CALTRANS STANDARD PLANS

A3A	ABBREVIATIONS (SHEET 1 OF 3)
A3B	ABBREVIATIONS (SHEET 2 OF 3)
A3C	ABBREVIATIONS (SHEET 3 OF 3)

GENERAL NOTES:

CONTACT DIGALERT AT 1(800)422-4133 BEFORE BEGINNING WORK.

ALL NATIVE BIRDS ARE PROTECTED FROM DISTURBANCE WHILE NESTING. AS FAR AS POSSIBLE, CONSTRUCTION ACTIVITIES SHOULD TAKE PLACE OUTSIDE OF THE BIRD NESTING SEASON (FEBRUARY 1ST THROUGH SEPTEMBER 15TH). HOWEVER, IF OTHER RESTRICTIONS MAKE IT IMPOSSIBLE TO AVOID THE NESTING SEASON, THE REGULATORY PERMITTING TEAM AT OCPW MUST BE CONTACTED AT (714) 647-3933 TO ARRANGE FOR PRE-CONSTRUCTION NESTING BIRD SURVEYS OF THE CONSTRUCTION AREAS AT LEAST 7 DAYS BEFORE THE START OF WORK. DISTURBANCE TO ANY ACTIVE NESTS MUST BE AVOIDED. CONSTRUCTION ACTIVITY WITHIN 300 FEET OF AN ACTIVE NEST [500 FEET FOR RAPTORS] SHOULD BE DELAYED UNTIL THE NEST IS NO LONGER ACTIVE, OR OTHERWISE APPROVED BY THE REGULATORY PERMITTING TEAM OR THEIR REPRESENTATIVE.

ANY CRACKS OR CREVICES, VOIDS OR HOLES IN BRIDGES, TREES, BUILDINGS OR OTHER STRUCTURES HAVE THE POTENTIAL TO SUPPORT ROOSTING BATS. THE REGULATORY PERMITTING TEAM MUST BE CONTACTED AT (714) 647-3933 AT LEAST 7 DAYS BEFORE THE START OF WORK TO CONDUCT A BAT SURVEY.

CITY OF COSTA MESA PUBLIC SERVICES DEPARTMENT

APPROVED: S. Yang 10/08/2021
DATE

COUNTY OF ORANGE PUBLIC WORKS DEPARTMENT

SUBMITTED: 10/26/2021
FIONA MAN, P.E. DATE
MANAGER
OC INFRASTRUCTURE PROGRAMS
PROJECT MANAGEMENT

RECOMMENDED: Nardy Khan 10/26/21
NARDY KHAN, P.E. DATE
DEPUTY DIRECTOR
OC INFRASTRUCTURE PROGRAMS

APPROVED: Kevin Onuma 10/26/2021
KEVIN ONUMA, P.E. DATE
ASSISTANT PUBLIC WORKS DIRECTOR
COUNTY ENGINEER

RECORD DRAWING

CONTRACTOR:
RESIDENT ENGINEER:
INSPECTOR:
CONSTRUCTION START DATE:
CONSTRUCTION COMPLETION DATE:

PREPARED BY

PREPARED UNDER RESPONSIBLE CHARGE OF:
NCM ENGINEERING CORP.
9850 RESEARCH
IRVINE, CALIFORNIA 92618

Mark Stiller 9/17/21
MARK STILLER, P.E. DATE

NO.	DESCRIPTION	SHT.	APPROVED	DATE

REVISIONS

W. O. NO. EQ 20588
DWG. NO. T1

SHEET 1 OF 13

SECTION A-A

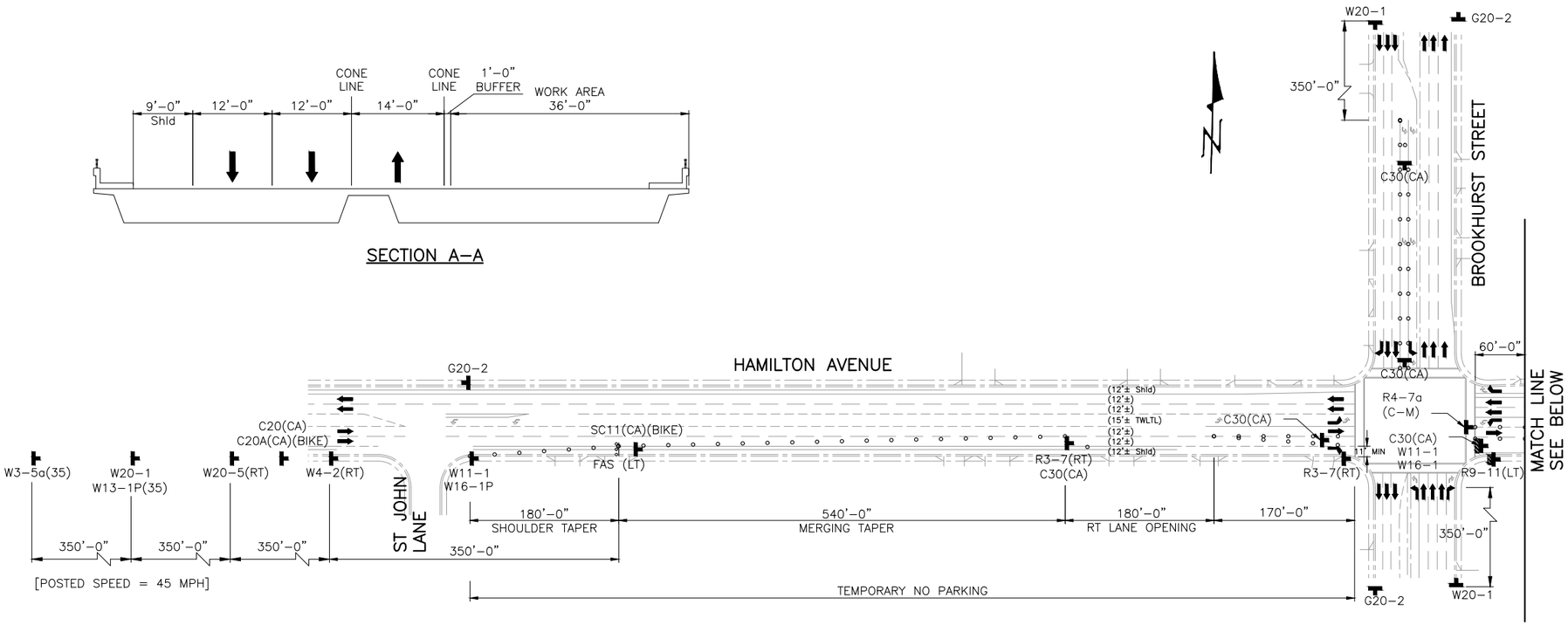

LEGEND

- CHANNELIZING DEVICE (30' C-C, TYP)
- TYPE 3 BARRICADE
- FAS SUPPORT
- SIGN (FACING SINGLE DIRECTION)
- SIGN (BACK TO BACK PANELS)
- DIRECTION OF TRAFFIC
- WORK AREA

ABBREVIATIONS

C-M	CONE-MOUNTED
FAS	FLASHING ARROW SIGN
TWLTL	TWO WAY LEFT TURN LANE

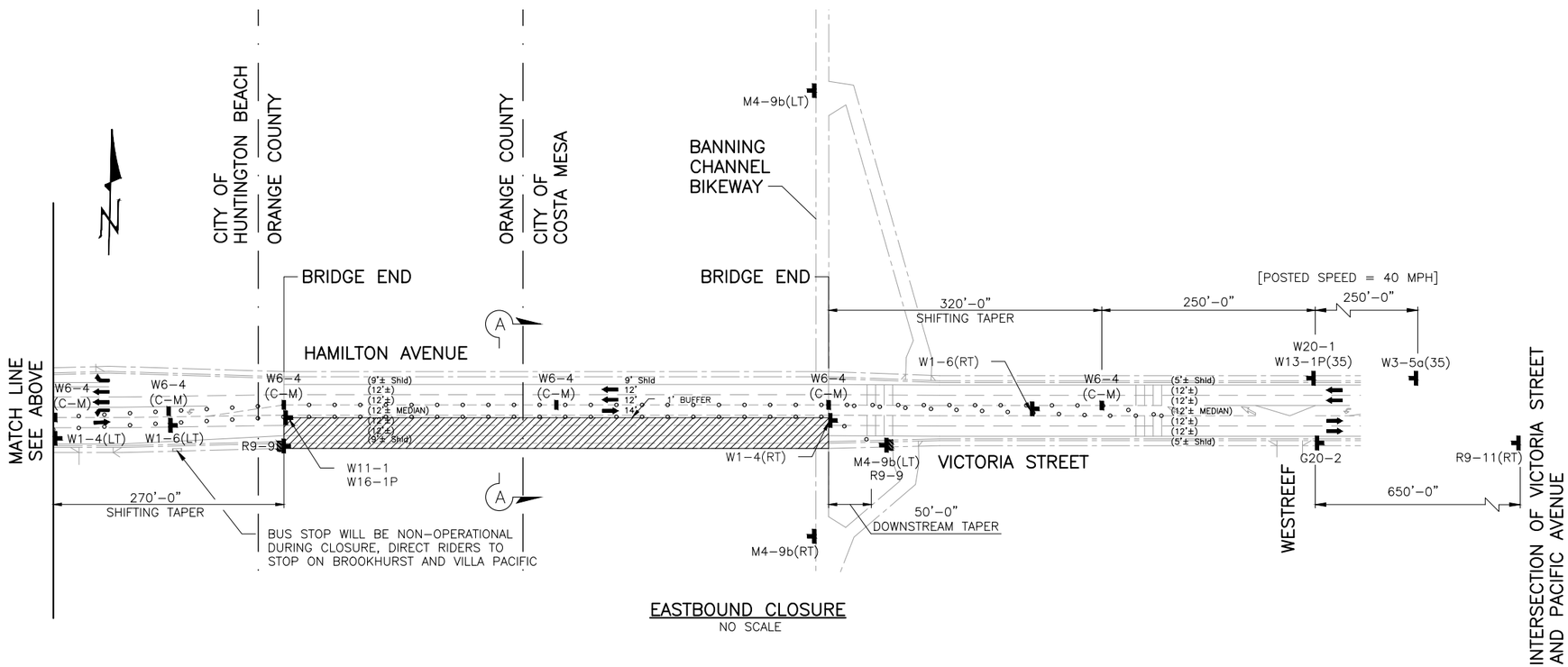

EASTBOUND CLOSURE
NO SCALE

THE CONTRACTOR SHALL VERIFY ALL CONTROLLING FIELD DIMENSIONS BEFORE ORDERING OR FABRICATING ANY MATERIAL.

COUNTY OF ORANGE CALIFORNIA

MARK	DESCRIPTION	DATE	APPR.

PREPARED UNDER THE RESPONSIBLE CHARGE OF:
REGISTERED CIVIL ENGINEER MARK STILLER No. C 75585 Exp. 6/30/22 STATE OF CALIFORNIA
9/17/21
DATE

DESIGNED BY: R. STULL
DRAWN BY: R. STULL
CHECKED BY: N. HAIGH
DRAWING CODE:
FILE NAME: 04_TRAFFIC PLANS.DWG
PLOT DATE: 9/23/21
SCALE: AS SHOWN

COUNTY OF ORANGE
OC PUBLIC WORKS

NCM ENGINEERING CORP.
9850 RESEARCH
IRVINE, CALIFORNIA 92618

HAMILTON AVE/VICTORIA ST
OVER SANTA ANA RIVER &
GREENVILLE BANING CHANNEL
PREVENTATIVE MAINTENANCE
Br. No. 55C-0103

TRAFFIC HANDLING
DETAILS NO. 3

Sheet Reference Number
TH3

Sheet 4 of 13

SECTION B-B

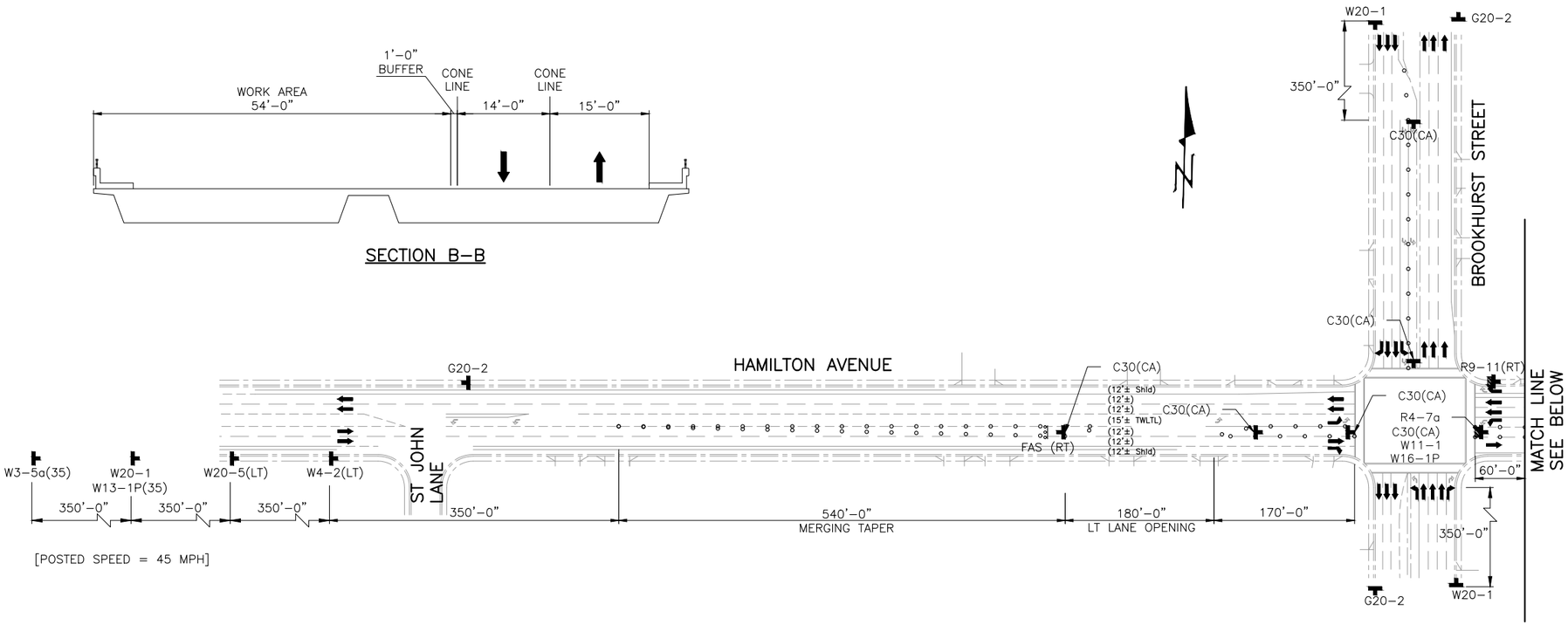

LEGEND

- CHANNELIZING DEVICE (30' C-C, TYP)
- TYPE 3 BARRICADE
- FAS SUPPORT
- SIGN (FACING SINGLE DIRECTION)
- SIGN (BACK TO BACK PANELS)
- DIRECTION OF TRAFFIC
- WORK AREA

ABBREVIATIONS

C-M	CONE-MOUNTED
FAS	FLASHING ARROW SIGN
TWLTL	TWO WAY LEFT TURN LANE

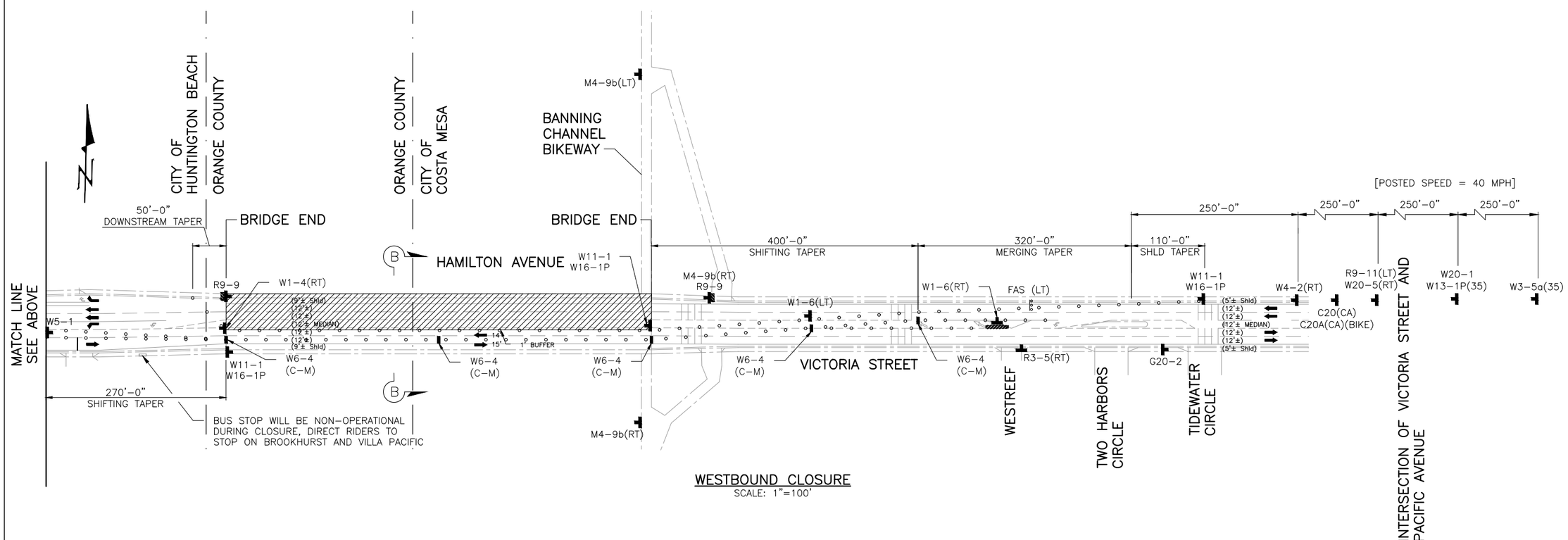

WESTBOUND CLOSURE

SCALE: 1"=100'

THE CONTRACTOR SHALL VERIFY ALL CONTROLLING FIELD DIMENSIONS BEFORE ORDERING OR FABRICATING ANY MATERIAL.

COUNTY OF ORANGE CALIFORNIA

MARK	DESCRIPTION	DATE	APPR.

PREPARED UNDER THE RESPONSIBLE CHARGE OF:

REGISTERED CIVIL ENGINEER MARK STILLER No. C 75585 Exp. 6/30/22 CIVIL STATE OF CALIFORNIA

9/17/21
DATE

DESIGNED BY: R. STULL
DRAWN BY: R. STULL
CHECKED BY: N. HAIGH
DRAWING CODE:
FILE NAME: 05 TRAFFIC PLANS.DWG
PLOT DATE: 9/23/21
SCALE: AS SHOWN

COUNTY OF ORANGE
OC PUBLIC WORKS

NCM ENGINEERING CORP.
9850 RESEARCH
IRVINE, CALIFORNIA 92618

HAMILTON AVE/VICTORIA ST
OVER SANTA ANA RIVER &
GREENVILLE BANING CHANNEL
PREVENTATIVE MAINTENANCE
Br. No. 55C-0103

TRAFFIC HANDLING
DETAILS NO. 4

Sheet Reference Number

TH4

Sheet 5 of 13

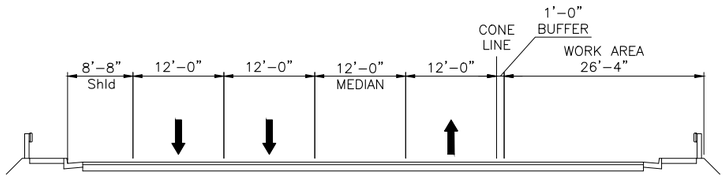

SECTION C–C

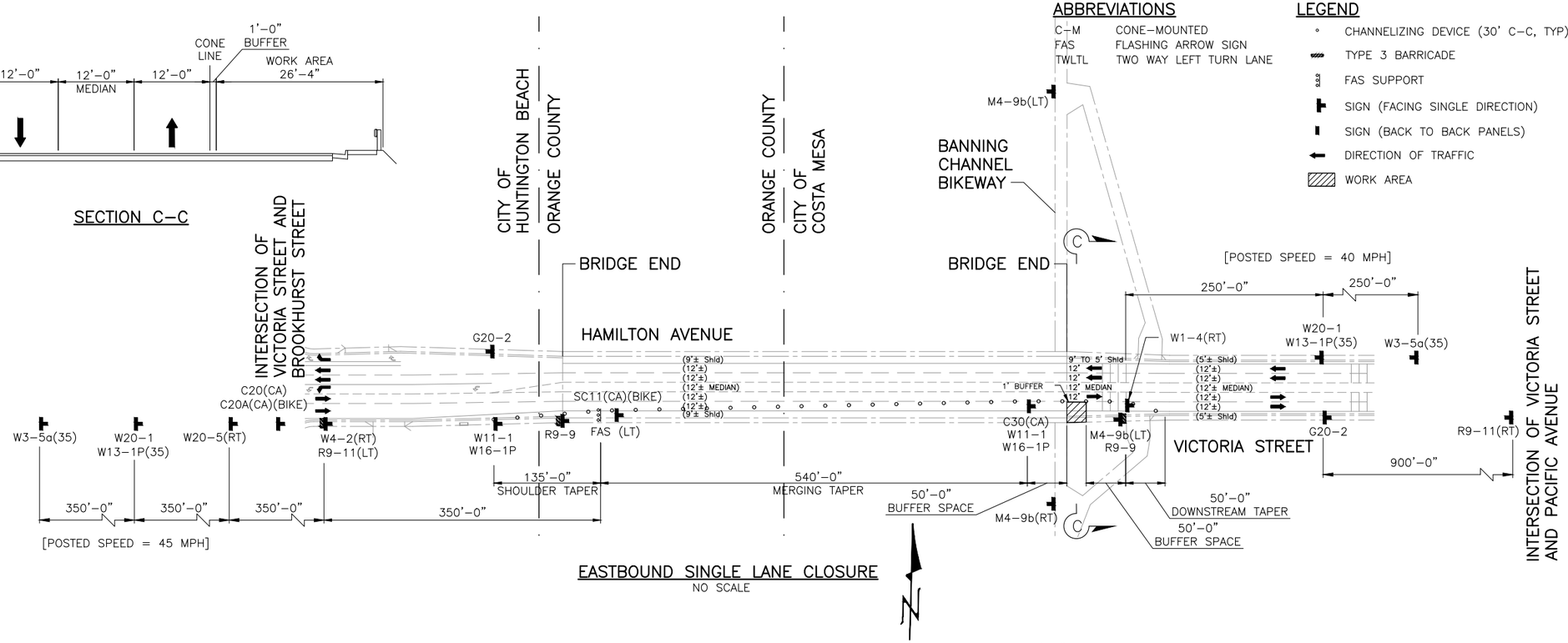

EASTBOUND SINGLE LANE CLOSURE
NO SCALE

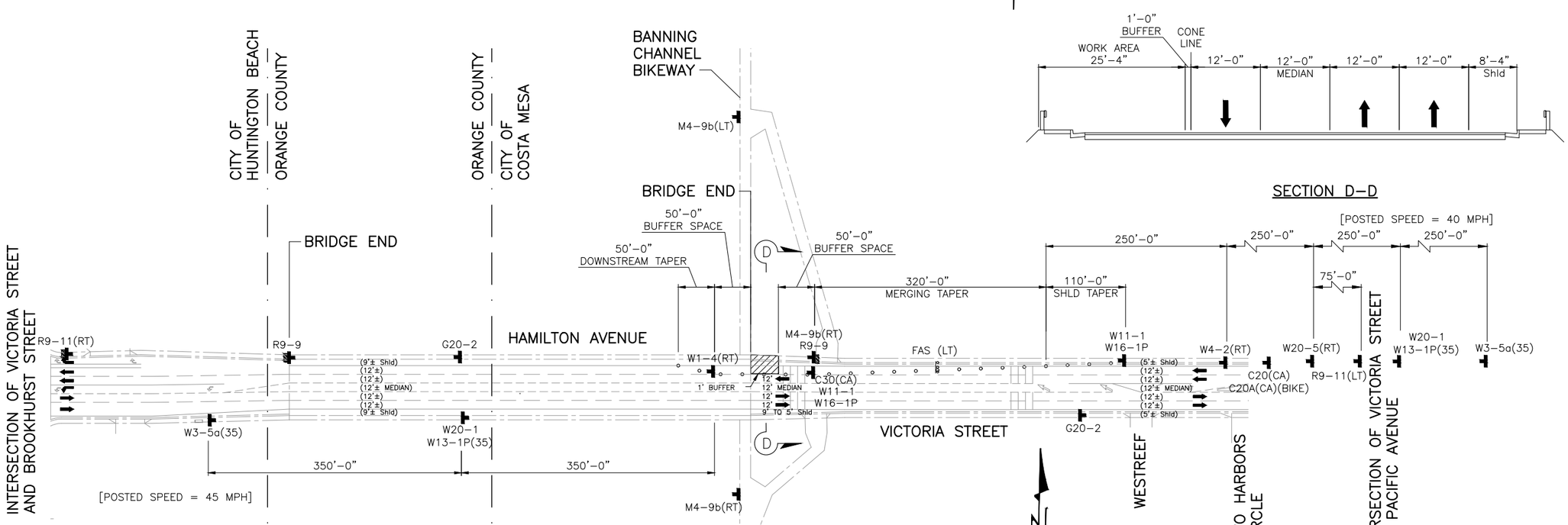

WESTBOUND SINGLE LANE CLOSURE
NO SCALE
(EAST BRIDGE END WORK AREA SHOWN, WEST BRIDGE END WORK AREA SIMILAR)

THE CONTRACTOR SHALL VERIFY ALL CONTROLLING FIELD DIMENSIONS BEFORE ORDERING OR FABRICATING ANY MATERIAL.

COUNTY OF ORANGE CALIFORNIA

MARK	DESCRIPTION	DATE	APPR.

PREPARED UNDER THE RESPONSIBLE CHARGE OF:
REGISTERED CIVIL ENGINEER MARK STILLER No. C 75935 Exp. 6/30/22 STATE OF CALIFORNIA
9/1 7/21
DATE

DESIGNED BY: R. STULL
DRAWN BY: R. STULL
CHECKED BY: N. HAIGH
DRAWING CODE:
FILE NAME: 06 TRAFFIC PLANS.DWG
PLOT DATE: 9/23/21
SCALE: AS SHOWN

COUNTY OF ORANGE
OC PUBLIC WORKS

NCM ENGINEERING CORP.
9850 RESEARCH
IRVINE, CALIFORNIA 92618

HAMILTON AVE/VICTORIA ST OVER SANTA ANA RIVER & GREENVILLE BANING CHANNEL PREVENTATIVE MAINTENANCE
Br. No. 55C-0103

TRAFFIC HANDLING
DETAILS NO. 5

Sheet Reference Number
TH5

Sheet 6 of 13

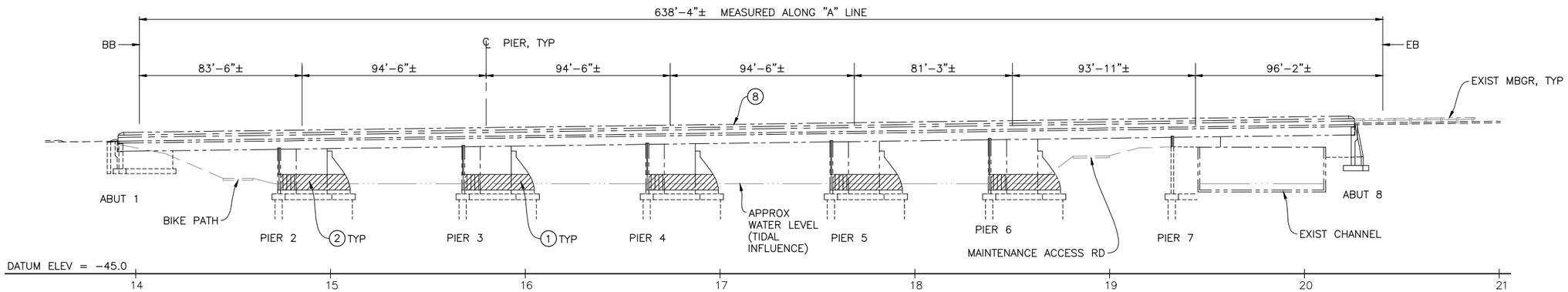

ELEVATION
SCALE: 1"=30'

LEGEND

- INDICATES NEW CONSTRUCTION
- INDICATES EXISTING
- DIRECTION OF TRAFFIC
- DIRECTION OF FLOW
- LIMITS OF PIER REPAIR, REMOVE UNSOUND CONCRETE AND REPAIR SPALLED SURFACE AREAS
- LIMITS OF PREPARE CONCRETE DECK SURFACE, TREAT BRDIGE DECK, REMOVE UNSOUND CONCRETE & RAPID SETTING CONCRETE PATCH
- LIMITS OF ROADWAY EXCAVATION
- LIMITS OF LIMITED COLD MILL ASPHALT CONCRETE PAVEMENT, REMOVE AND REPLACE ROADWAY STRUCTURAL SECTION AND ASPHALT CONCRETE.
- LIMITS OF GALVANIC CATHODIC PROTECTION OF PIER WALL.

UTILITY DISPOSITIONS:

- A SCE UNDERGROUND CONDUIT, PROTECT-IN-PLACE
- B 4" SEWER, CITY OF NEWPORT BEACH, PROTECT-IN-PLACE
- C AT&T, PROTECT-IN-PLACE
- D SCE STREET LIGHTING CONDUIT, PROTECT-IN-PLACE
- E ELECTRICAL CONDUITS (FUTURE STREET LIGHTING), PROTECT-IN-PLACE

NOTES:

1. NOSE WALL REPAIR
2. PIER WALL REPAIR
3. ABUTMENT BACKWALL REPAIR
4. REMOVE AND REPLACE SIDEWALK, CURB & GUTTER
5. REPLACE JOINT SEAL, MR = 2", JOINT WIDTH VARIES, FIELD VERIFY
6. REPLACE JOINT SEAL, MR = 1 1/2", JOINT WIDTH VARIES, FIELD VERIFY
7. INSTALL SIDEWALK JOINT ARMOR
8. REPLACE MISSING NUTS AND WASHERS ON METAL RAILING, TOTAL 10
9. REMOVE UNSOUND CONCRETE ON BARRIER FACE AND REPAIR SPALL WITH RAPID SETTING CONCRETE PATCH
10. REPLACE ALL REMOVED TRAFFIC STRIPING AND PAVEMENT MARKINGS IN-KIND
11. MANHOLE, ADJUST TO GRADE

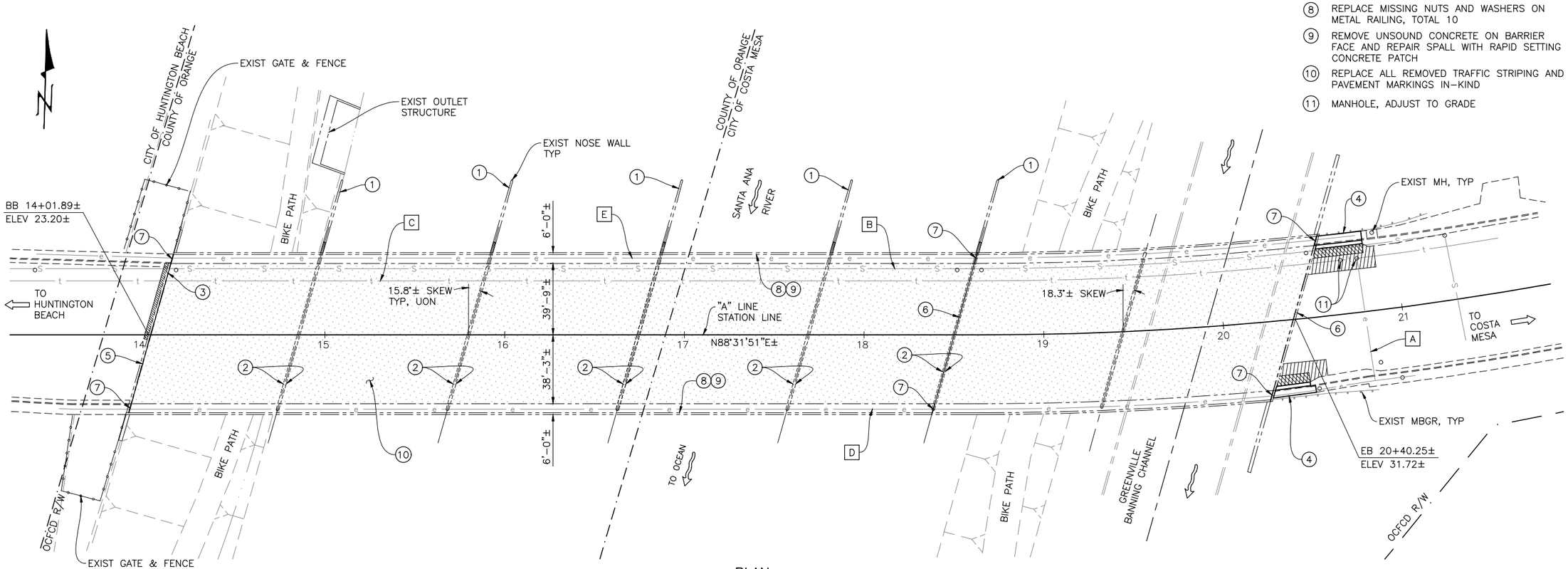

PLAN
SCALE: 1"=30'

THE CONTRACTOR SHALL VERIFY ALL CONTROLLING FIELD DIMENSIONS BEFORE ORDERING OR FABRICATING ANY MATERIAL.

COUNTY OF ORANGE CALIFORNIA

MARK	DESCRIPTION	DATE	APPR.

PREPARED UNDER THE RESPONSIBLE CHARGE OF: REGISTERED CIVIL ENGINEER MARK STILLER No. C 79585 Exp. 6/30/22 STATE OF CALIFORNIA — 2/28/22 DATE

DESIGNED BY: L. MAHARJAN
DRAWN BY: R. ANDRASEK
CHECKED BY: M. STILLER
DRAWING CODE:
FILE NAME: 07_HAMILTON GP.DWG
PLOT DATE: 2/28/22
SCALE: AS SHOWN

COUNTY OF ORANGE
OC PUBLIC WORKS

NCM ENGINEERING CORP.
9850 RESEARCH
IRVINE, CALIFORNIA 92618

HAMILTON AVE/VICTORIA ST OVER SANTA ANA RIVER & GREENVILLE BANING CHANNEL PREVENTATIVE MAINTENANCE
Br. No. 55C-0103

GENERAL PLAN

Sheet Reference Number
S1

Sheet R7 of 13

GENERAL NOTES:

1. SEDIMENT FROM AREAS DISTURBED BY CONSTRUCTION SHALL BE RETAINED ON SITE USING STRUCTURAL CONTROLS TO THE MAXIMUM EXTENT PRACTICABLE.
2. STOCKPILES OF SOIL SHALL BE PROPERLY CONTAINED TO ELIMINATE OR REDUCE SEDIMENT TRANSPORT FROM THE SITE TO THE STREETS, DRAINAGE FACILITIES OR ADJACENT PROPERTIES VIA RUNOFF, VEHICLE TRACKING, OR WIND.
3. APPROPRIATE BMPS FOR CONSTRUCTION-RELATED MATERIALS, WASTES, SPILLS OR RESIDUES SHALL BE IMPLEMENTED TO MINIMIZE TRANSPORT FROM THE SITE TO STREETS, DRAINAGE FACILITIES, OR ADJOINING PROPERTIES BY WIND OR RUNOFF.
4. RUNOFF FROM EQUIPMENT AND VEHICLE WASHING SHALL BE CONTAINED AT CONSTRUCTION SITES UNLESS TREATED TO REDUCE OR REMOVE SEDIMENT AND OTHER POLLUTANTS.
5. ALL CONSTRUCTION CONTRACTOR AND SUBCONTRACTOR PERSONNEL ARE TO BE MADE AWARE OF THE REQUIRED BEST MANAGEMENT PRACTICES (BMPS) AND GOOD HOUSEKEEPING MEASURES FOR THE PROJECT SITE AND ANY ASSOCIATED CONSTRUCTION STAGING AREAS.
6. AT THE END OF EACH DAY OF CONSTRUCTION ACTIVITY ALL CONSTRUCTION DEBRIS AND WASTE MATERIALS SHALL BE COLLECTED AND PROPERLY DISPOSED OF IN TRASH OR RECYCLE BINS.
7. CONSTRUCTION SITES SHALL BE MAINTAINED IN SUCH A CONDITION THAT A STORM DOES NOT CARRY WASTES OR POLLUTANTS OFF THE SITE. DISCHARGES OTHER THAN STORMWATER (NON-STORMWATER DISCHARGES) ARE PROHIBITED, EXCEPT AS AUTHORIZED BY AN INDIVIDUAL NATIONAL POLLUTANT DISCHARGE ELIMINATION SYSTEM (NPDES) PERMIT OR THE STATEWIDE GENERAL CONSTRUCTION STORMWATER PERMIT. POTENTIAL POLLUTANTS INCLUDE BUT ARE NOT LIMITED TO: SOLID OR LIQUID CHEMICAL SPILLS; WASTES FROM PAINTS, STAINS, SEALANTS, SOLVENTS, DETERGENTS, GLUES, LIME, PESTICIDES, HERBICIDES, FERTILIZERS, WOOD PRESERVATIVES, AND ASBESTOS FIBERS, PAINT FLAKES OR STUCCO FRAGMENTS; FUELS, OILS, LUBRICANTS, AND HYDRAULIC, RADIATOR OR BATTERY FLUIDS; CONCRETE AND RELATED CUTTING OR CURING RESIDUES; FLOATABLE WASTES; WASTES FROM ENGINE/EQUIPMENT STEAM CLEANING OR CHEMICAL DEGREASING; WASTES FROM STREET CLEANING; AND SUPER-CHLORINATED POTABLE WATER FROM LINE FLUSHING AND TESTING. DURING CONSTRUCTION, DISPOSAL OF SUCH MATERIALS SHOULD OCCUR IN A SPECIFIED AND CONTROLLED TEMPORARY AREA ON-SITE PHYSICALLY SEPARATED FROM POTENTIAL STORMWATER RUNOFF, WITH ULTIMATE DISPOSAL IN ACCORDANCE WITH LOCAL, STATE AND FEDERAL REQUIREMENTS.
8. DISCHARGING CONTAMINATED GROUNDWATER IS PROHIBITED. DISCHARGING OF NON-CONTAMINATED GROUNDWATER BY DEWATERING SHALL COMPLY WITH REQUIREMENTS OF APPLICABLE NATIONAL POLLUTANT DISCHARGE ELIMINATION SYSTEM (NPDES) PERMITS AS FOLLOWS: FOR PROJECTS WITHIN THE SANTA ANA REGION AND SAN DIEGO CREEK/NEWPORT BAY WATERSHED, PERMIT NO. CAG918002, ORDER R8-2019-0061 ISSUED BY THE SANTA ANA REGIONAL WATER QUALITY CONTROL BOARD. FOR OTHER PROJECTS WITHIN THE SANTA ANA REGION, PERMIT NO. CAG998001, ORDER R8-2020-0006 ISSUED BY THE SANTA ANA REGIONAL WATER QUALITY CONTROL BOARD. FOR PROJECTS WITHIN THE SAN DIEGO REGION, PERMIT NO. CAG919003, ORDER NO. R9-2015-0013 ISSUED BY THE SAN DIEGO REGIONAL WATER QUALITY CONTROL BOARD. THESE THREE PERMITS MAY BE UPDATED AT ANY TIME DURING THE TERM OF PROJECT. ANY INDICATION OR EVIDENCE OF WATER QUALITY THAT DOES NOT MEET REQUIRED STANDARDS WILL BE REPORTED TO OC PUBLIC WORKS/COUNTYWIDE COMPLIANCE PROGRAM AT (877) 89-SPILL.

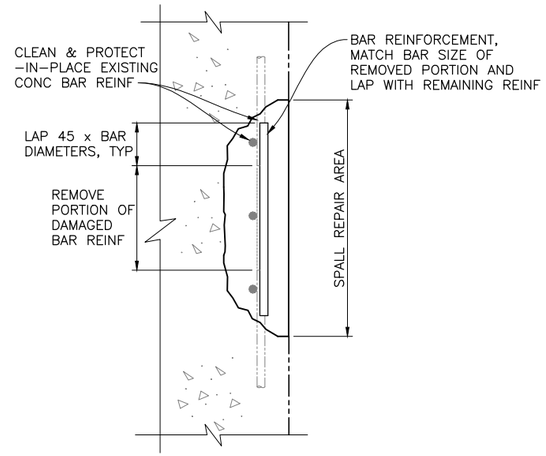

TYPICAL SPALL REPAIR WITH BAR REINFORCEMENT REPLACEMENT

NO SCALE

NOTES:

1. FOR ADDITIONAL SPALL REPAIR DETAIL NOT SHOWN, SEE "APPENDIX A: Concrete Repair Details, Partial-depth Repair" OF SPECIAL PROVISIONS FOR JOB ORDER CONTRACTS.
2. MAXIMUM ALLOWED REMOVAL DEPTH IS 5". CONCRETE PATCH MUST BE CURED 14 DAYS BEFORE WORK PROCEEDS ON OPPOSITE SIDE OF PIER WALL
3. WORK ON ZONE "C" ON CONSECUTIVE PIERS MUST NOT PROGRESS SIMULTANEOUSLY.
4. SUBMIT CONSTRUCTION PHASING PLAN MINIMUM 3 WEEK PRIOR TO CONSTRUCTION. WORK MUST NOT BEGIN BEFORE APPROVAL OF THE CONSTRUCTION PHASING PLAN.

(1) PREPARE CONCRETE DECK SURFACE, TREAT BRIDGE DECK, REMOVE UNSOUND CONCRETE AND RAPID SETTING CONCRETE PATCH

(2) REMOVE UNSOUND CONCRETE AND RAPID SETTING CONCRETE PATCH

(3) REPLACE MISSING NUTS AND WASHERS ON METAL RAILING, TOTAL 10

LEGEND

- INDICATES NEW CONSTRUCTION
- INDICATES EXISTING
- INDICATES LIMITS OF REMOVE UNSOUND CONCRETE AND REPAIR SPALLED SURFACE AREA
- GALVANIC CATHODIC PROTECTION WITH CONCRETE ENCASEMENT

CONSTRUCTION PHASING:

STAGE 1:
1. INSTALL DEWATERING SYSTEM AROUND PIERS 2, 3 & 4.
2. REPAIR PIER WALLS IN FOLLOWING SEQUENCE:
   - PIER 2 WEST FACE & PIER 4 WEST FACE
   - PIER 3 WEST FACE & PIER 4 WEST FACE
   - PIER 2 EAST FACE & PIER 4 EAST FACE
   - PIER 3 EAST FACE & PIER 4 EAST FACE
3. REMOVE DEWATERING SYSTEM

STAGE 2:
1. INSTALL DEWATERING SYSTEM AROUND PIERS 5, 6 & 7.
2. REPAIR PIER WALLS IN FOLLOWING SEQUENCE:
   - PIER 5 WEST FACE & PIER 7 WEST FACE
   - PIER 6 EAST FACE
   - PIER 5 EAST FACE & PIER 7 EAST FACE
   - PIER 7 WEST FACE
3. REMOVE DEWATERING SYSTEM

STRUCTURE GENERAL NOTES:

REINFORCED CONCRETE
fy = 60 ksi
f'c = 4.0 ksi

CONCRETE ENCASEMENT
fy = 60 ksi (WWR)
f'c = 3.6 ksi

PIER	FACE	REPAIRING SPALLED SURFACE AREA QUANTITIES (SQFT)			"A"
		ZONE (A)	ZONE (B)	ZONE (C)	
2	WEST	10	5	50	10'±
	EAST	10	5	120	10'±
3	WEST	10	5	120	10'±
	EAST	10	5	50	10'±
4	WEST	10	5	120	10'±
	EAST	10	5	100	10'±
5	WEST	10	5	100	10'±
	EAST	10	5	100	12'±
6	WEST	10	5	100	10'±
	EAST	10	5	400	16'±

ZONE (A) : 1991 CONSTRUCTION, NOSE WALL REINF: #8 @ 12 VERT
#5 @ 12 HORIZ

ZONE (B) : 1991 CONSTRUCTION, PIER WALL REINF: #9 @ 6 VERT
#4 @ 6 & 12 HORIZ

ZONE (C) : 1978 CONSTRUCTION, PIER WALL REINF: #9 @ 7 VERT
#4 @ 11 HORIZ

NOTE:
"A" DIMENSION AND QUANTITIES OF UNSOUND CONCRETE SHOWN ON TABLE ARE FOR ESTIMATING PURPOSES ONLY. ACTUAL DIMENSIONS SHALL BE BASED ON FIELD MEASUREMENTS AND AS DIRECTED BY THE ENGINEER.

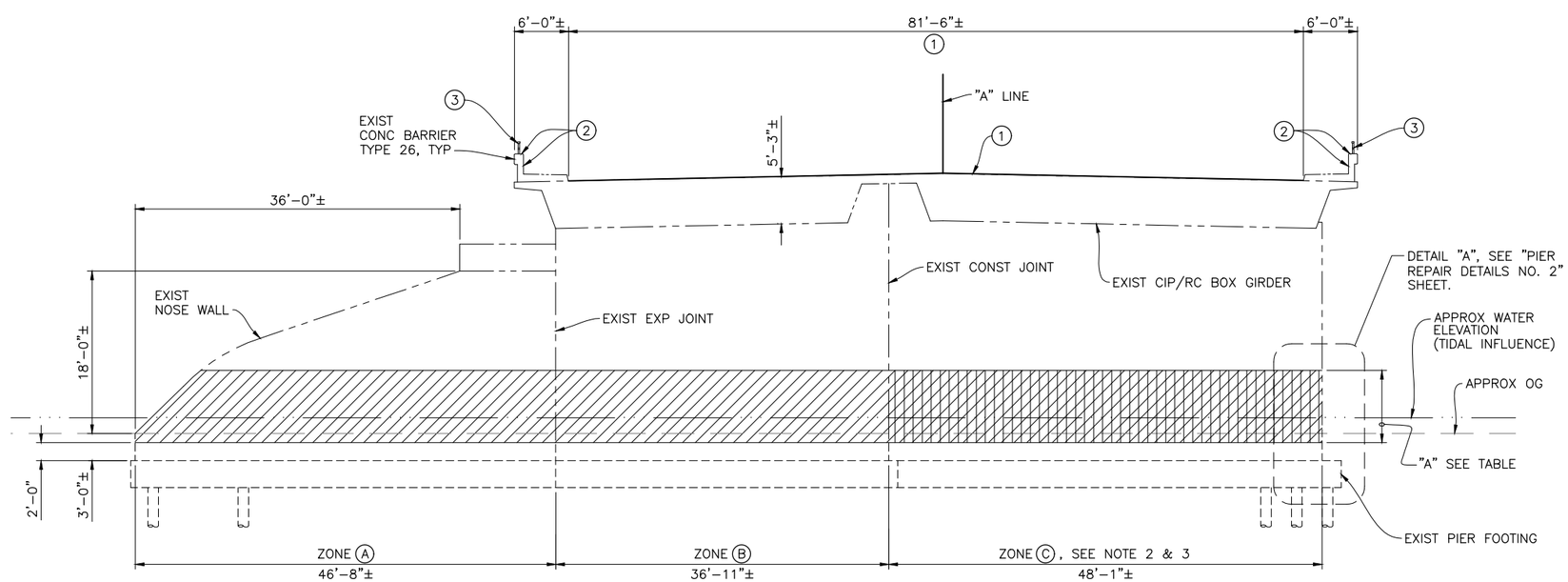

TYPICAL PIER ELEVATION

SCALE: 1/8" = 1'-0"

(WEST PIER FACE SHOWN, EAST PIER FACE SIMILAR)

THE CONTRACTOR SHALL VERIFY ALL CONTROLLING FIELD DIMENSIONS BEFORE ORDERING OR FABRICATING ANY MATERIAL.

COUNTY OF ORANGE CALIFORNIA

MARK	DESCRIPTION	DATE	APPR.

PREPARED UNDER THE RESPONSIBLE CHARGE OF:
REGISTERED CIVIL ENGINEER MARK STILLER No. C 79935 Exp. 6/30/22 STATE OF CALIFORNIA
9/24/21
DATE

DESIGNED BY: L. MAHARJAN
DRAWN BY: R. ANDRASEK
CHECKED BY: M. STILLER
DRAWING CODE:
FILE NAME: 08_HAMILTON PIER 1.DWG
PLOT DATE: 9/24/21
SCALE: AS SHOWN

COUNTY OF ORANGE
OC PUBLIC WORKS

NCM ENGINEERING CORP.
9850 RESEARCH
IRVINE, CALIFORNIA 92618

HAMILTON AVE/VICTORIA ST OVER SANTA ANA RIVER & GREENVILLE BANING CHANNEL PREVENTATIVE MAINTENANCE
Br. No. 55C-0103

PIER REPAIR DETAILS NO. 1

Sheet Reference Number
S2

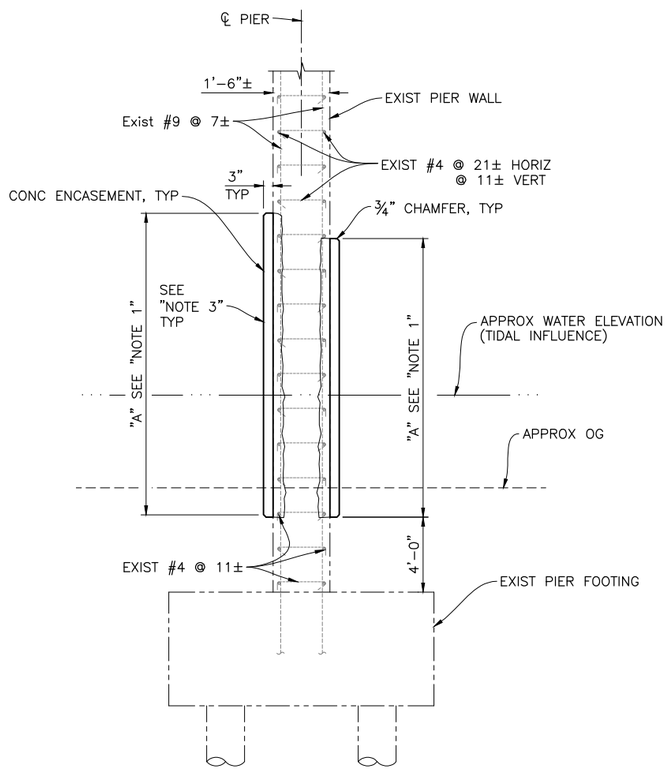

SECTION A–A
SCALE: 1/2" = 1'-0"

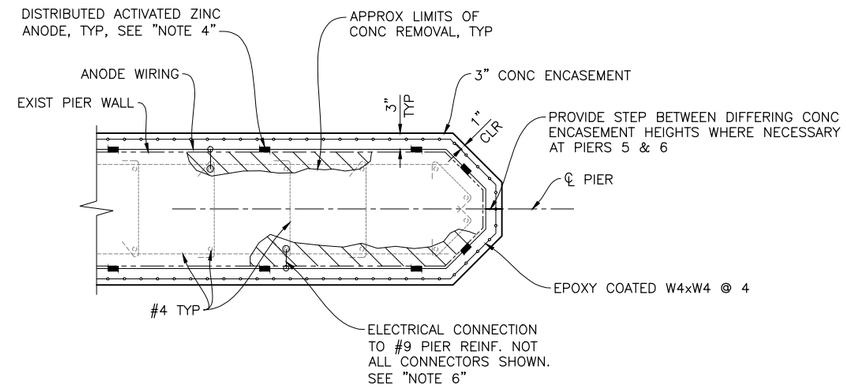

SECTION B–B
SCALE: 1" = 1'-0"

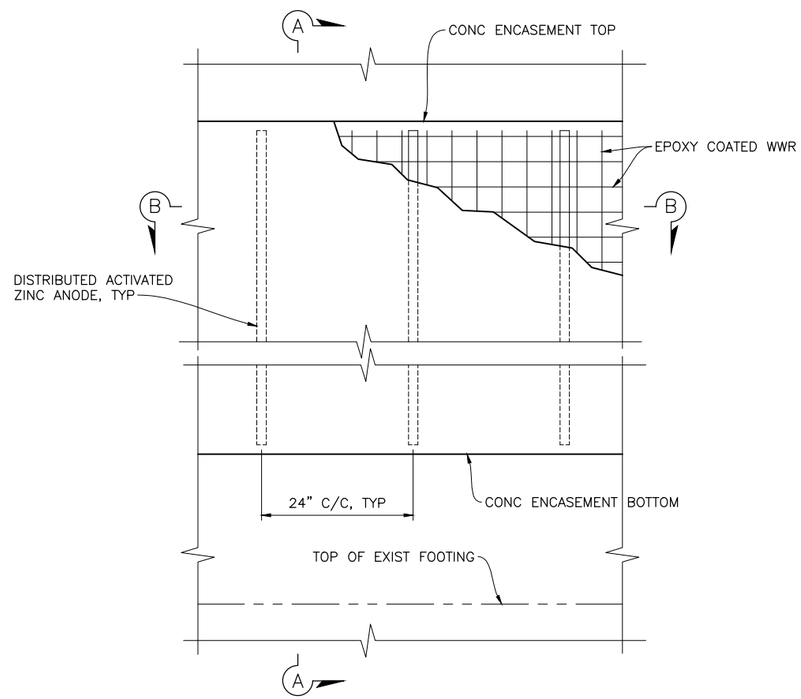

DETAIL A
NO SCALE

LEGEND

- ——— INDICATES NEW CONSTRUCTION
- - - - INDICATES EXISTING
- REMOVE UNSOUND CONCRETE AND REPAIR SPALLED SURFACE AREAS

NOTES:

1. FOR "A" DIMENSION SEE "PIER DETAILS NO. 1" SHEET.
2. FOR LOCATION OF DETAIL "A", SEE "PIER DETAILS NO. 1" SHEET.
3. REMOVE ALL MARINE GROWTH AND CORROSION PRODUCT. ROUGHEN EXISTING CONCRETE SURFACE BEFORE PLACING CONCRETE ENCASEMENT.
4. DISTRIBUTED ACTIVATED ZINC ANODE SHALL BE DAS MARINE ANODES (1⅜" x 2½") FROM VECTOR CORROSION TECHNOLOGIES OR APPROVED EQUIVALENT.
5. WIRE ALL ANODES TO PROVIDE ELECTRICAL CONNECTIVITY.
6. MAKE A MINIMUM TWO ELECTRICAL CONNECTIONS WITH ACTIVATED ZINC ANODES TO THE REINFORCING STEEL WITHIN 150 SQ FT OF CONCRETE ENCASEMENT. CONNECTIONS SHALL BE EVENLY DISTRIBUTED.
7. ENSURE ELECTRICAL CONNECTIVITY BETWEEN ALL PIER REINFORCEMENT WITHIN GALVANIC PROTECTION ZONE.
8. INSTALL DISTRIBUTED ACTIVATED ZINC ANODE PER MANUFACTURER RECOMMENDATIONS.

THE CONTRACTOR SHALL VERIFY ALL CONTROLLING FIELD DIMENSIONS BEFORE ORDERING OR FABRICATING ANY MATERIAL.

COUNTY OF ORANGE CALIFORNIA

MARK	DESCRIPTION	DATE	APPR.

PREPARED UNDER THE RESPONSIBLE CHARGE OF:
REGISTERED CIVIL ENGINEER MARK STILLER No. C 79935 Exp. 6/30/22 CIVIL STATE OF CALIFORNIA
9/24/21
DATE

DESIGNED BY: L. MAHARJAN
DRAWN BY: R. ANDRASEK
CHECKED BY: M. STILLER
DRAWING CODE:
FILE NAME: 09_HAMILTON PIER 2.DWG
PLOT DATE: 9/24/21
SCALE: AS SHOWN

COUNTY OF ORANGE
OC PUBLIC WORKS

NCM ENGINEERING CORP.
9850 RESEARCH
IRVINE, CALIFORNIA 92618

HAMILTON AVE/VICTORIA ST
OVER SANTA ANA RIVER &
GREENVILLE BANING CHANNEL
PREVENTATIVE MAINTENANCE
Br. No. 55C-0103

PIER REPAIR
DETAILS NO. 2

Sheet Reference Number
S3

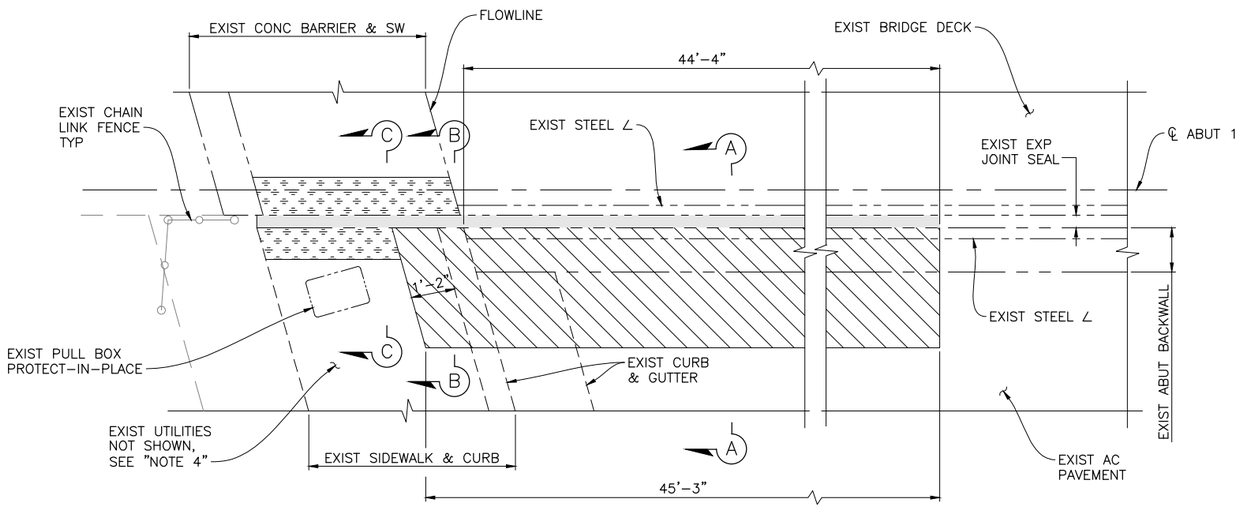

ABUTMENT 1 PLAN – NW CORNER
1/2" = 1'-0"

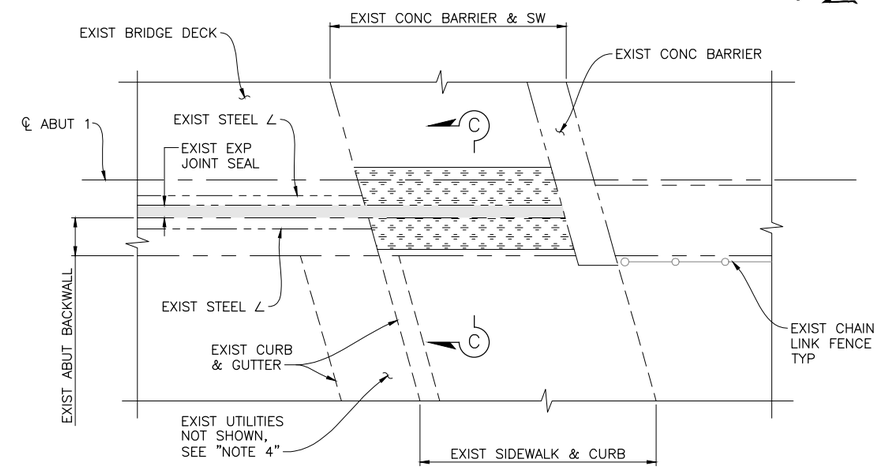

ABUTMENT 1 PLAN – SW CORNER
1/2" = 1'-0"

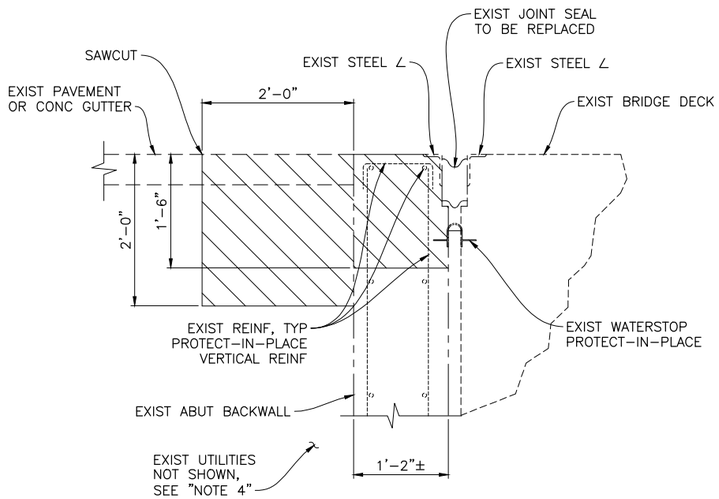

SECTION A–A (REMOVAL)
1" = 1'-0"

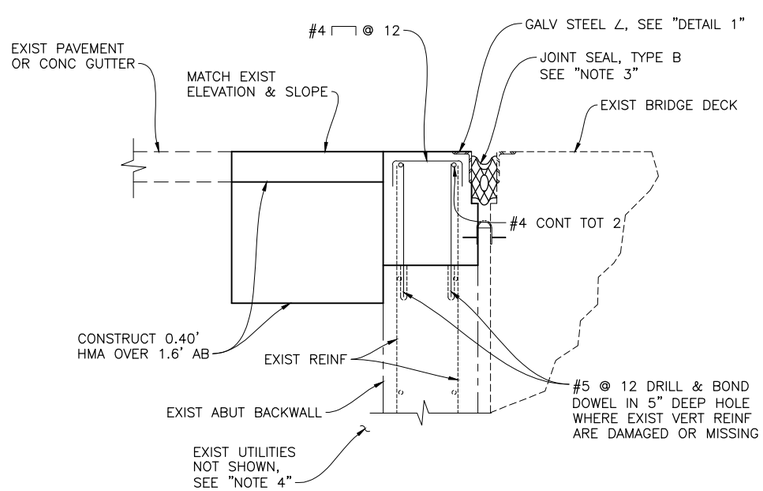

SECTION A–A (REHABILITATION)
1" = 1'-0"

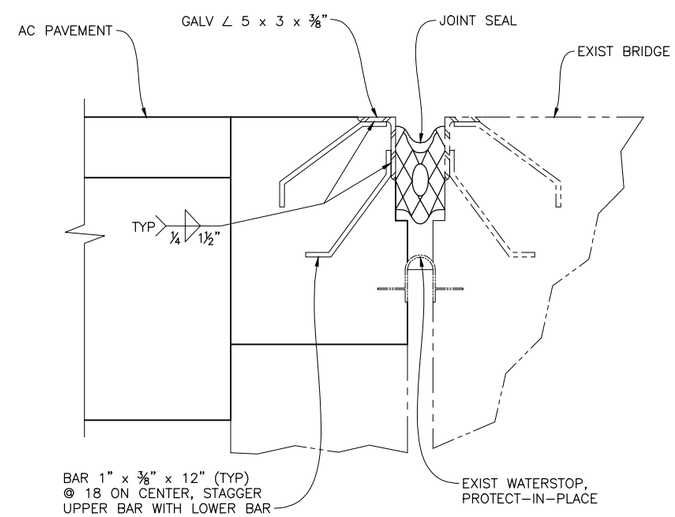

DETAIL 1
2" = 1'-0"

LEGEND

- INDICATES NEW CONSTRUCTION
- INDICATES EXISTING
- LIMITS OF SIDEWALK, ROADWAY OR BRIDGE REMOVAL (PORTION)
- LIMITS OF SIDEWALK GRIND

NOTES:

1. FOR SIDEWALK ARMOR DETAILS AND "SECTION D–D", SEE SHEET S7.
2. FOR "SECTION B–B" & "SECTION C–C", SEE SHEET S5.
3. FOR JOINT SEAL, SEE CALTRANS STD PLAN B6–21.
4. IDENTIFY EXISTING UTILITIES AND PROTECT IN PLACE.

THE CONTRACTOR SHALL VERIFY ALL CONTROLLING FIELD DIMENSIONS BEFORE ORDERING OR FABRICATING ANY MATERIAL.

COUNTY OF ORANGE CALIFORNIA

MARK	DESCRIPTION	DATE	APPR.

PREPARED UNDER THE RESPONSIBLE CHARGE OF:
REGISTERED CIVIL ENGINEER MARK STILLER No. C 79595 Exp. 6/30/22 STATE OF CALIFORNIA
2/25/22
DATE

DESIGNED BY: L. MAHARJAN
DRAWN BY: R. ANDRASEK
CHECKED BY: M. STILLER
DRAWING CODE:
FILE NAME: 10_HAMILTON ABUT 1.DWG
PLOT DATE: 2/25/22
SCALE: AS SHOWN

COUNTY OF ORANGE
OC PUBLIC WORKS

NCM ENGINEERING CORP.
9850 RESEARCH
IRVINE, CALIFORNIA 92618

HAMILTON AVE/VICTORIA ST OVER SANTA ANA RIVER & GREENVILLE BANING CHANNEL PREVENTATIVE MAINTENANCE
Br. No. 55C-0103

ABUTMENT REPAIR
DETAILS NO. 1

Sheet Reference Number
S4

Sheet R10 of 13

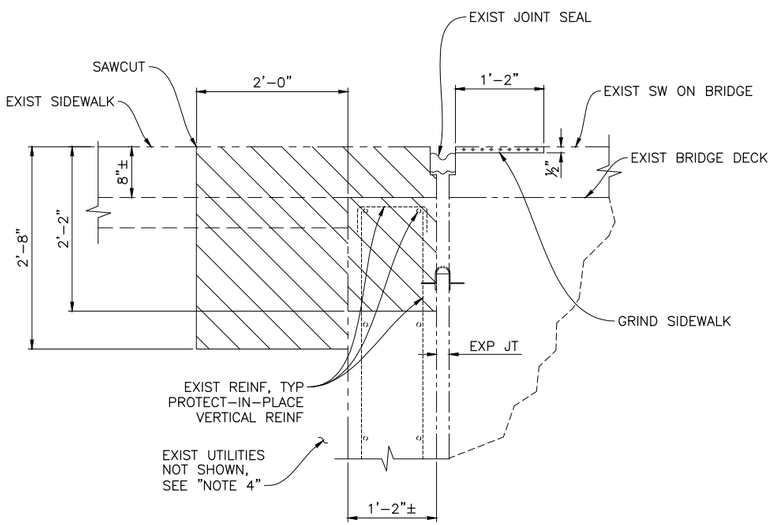

SECTION B–B (REMOVAL)
1" = 1'-0"

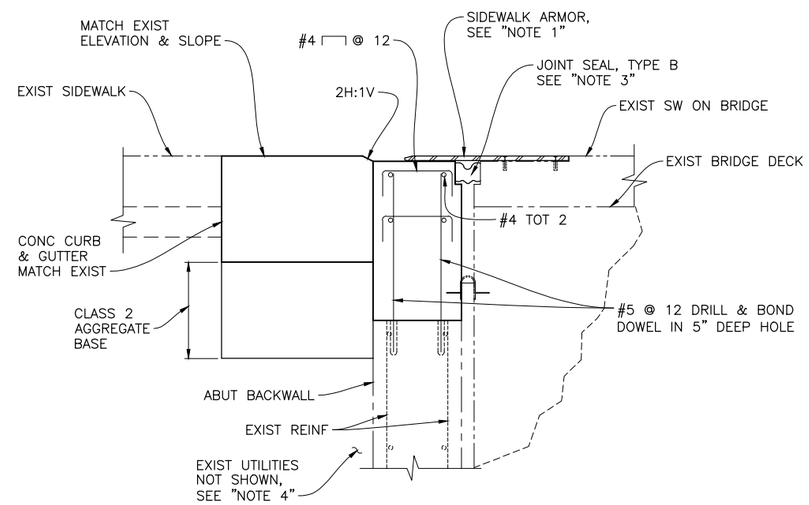

SECTION B–B (REHABILITATION)
1" = 1'-0"

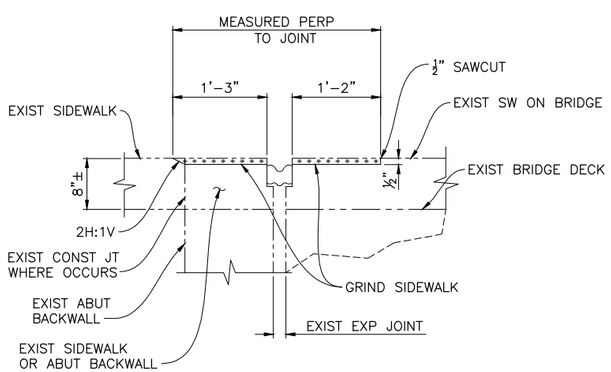

SECTION C–C (REMOVAL)
1" = 1'-0"

NOTE:
SHOWN AT ABUTMENTS.
HINGE 1 SIMILAR.

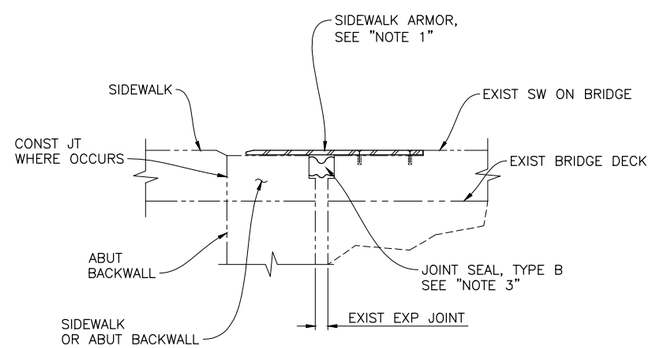

SECTION C–C (REHABILITATION)
1" = 1'-0"

NOTE:
SHOWN AT ABUTMENTS.
HINGE 1 SIMILAR.

LEGEND

- INDICATES NEW CONSTRUCTION
- INDICATES EXISTING
- LIMITS OF SIDEWALK, ROADWAY OR BRIDGE REMOVAL (PORTION)
- LIMITS OF SIDEWALK GRIND

NOTES:

1. FOR ADDITIONAL SPALL REPAIR DETAIL NOT SHOWN, SEE "APPENDIX A: Concrete Repair Details, Partial–depth Repair" OF SPECIAL PROVISIONS FOR JOB ORDER CONTRACTS.
2. FOR LOCATION OF "SECTION B–B" AND "SECTION C–C", SEE "ABUTMENT REPAIR DETAILS NO. 1" AND "ABUTMENT REPAIR DETAILS NO. 2" SHEETS.
3. FOR JOINT SEAL, SEE CALTRANS STD PLAN B6–21.
4. IDENTIFY EXISTING UTILITIES AND PROTECT IN PLACE.

THE CONTRACTOR SHALL VERIFY ALL CONTROLLING FIELD DIMENSIONS BEFORE ORDERING OR FABRICATING ANY MATERIAL.

COUNTY OF ORANGE CALIFORNIA

MARK	DESCRIPTION	DATE	APPR.

PREPARED UNDER THE RESPONSIBLE CHARGE OF:
REGISTERED CIVIL ENGINEER MARK STILLER No. C 79935 Exp. 6/30/22 CIVIL STATE OF CALIFORNIA
9/24/21
DATE

DESIGNED BY: L. MAHARJAN
DRAWN BY: R. ANDRASEK
CHECKED BY: M. STILLER
DRAWING CODE:
FILE NAME: 11_HAMILTON ABUT 2.DWG
PLOT DATE: 9/24/21
SCALE: AS SHOWN

COUNTY OF ORANGE
OC PUBLIC WORKS

NCM ENGINEERING CORP.
9850 RESEARCH
IRVINE, CALIFORNIA 92618

HAMILTON AVE/VICTORIA ST
OVER SANTA ANA RIVER &
GREENVILLE BANING CHANNEL
PREVENTATIVE MAINTENANCE
Br. No. 55C-0103

ABUTMENT REPAIR
DETAILS NO. 2

Sheet Reference Number
S5

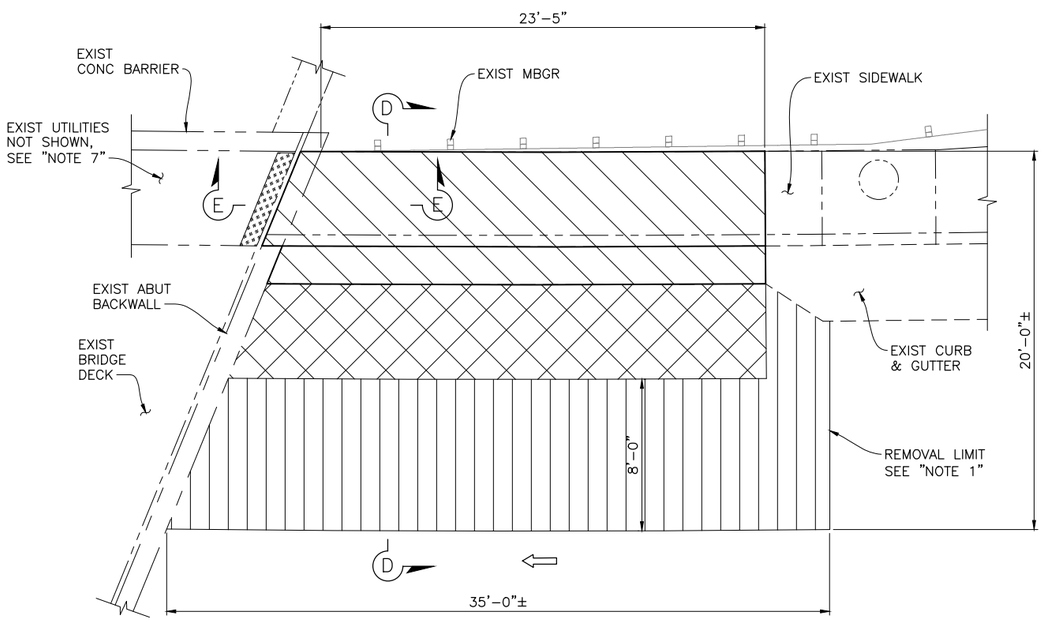

ABUTMENT 8 PLAN (NE CORNER)
1/4" = 1'-0"

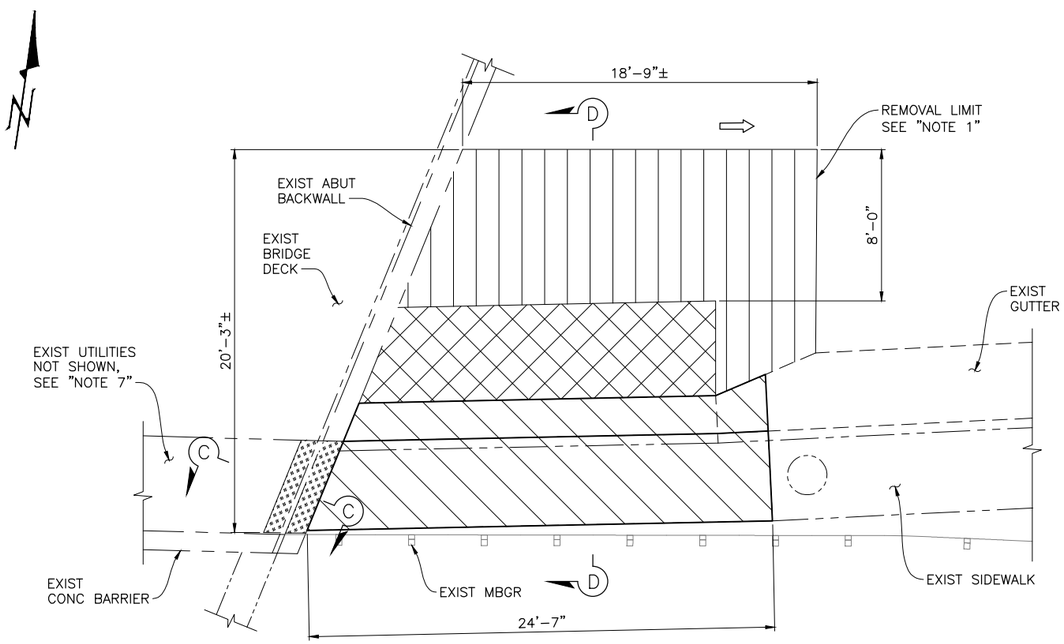

ABUTMENT 8 PLAN (SE CORNER)
1/4" = 1'-0"

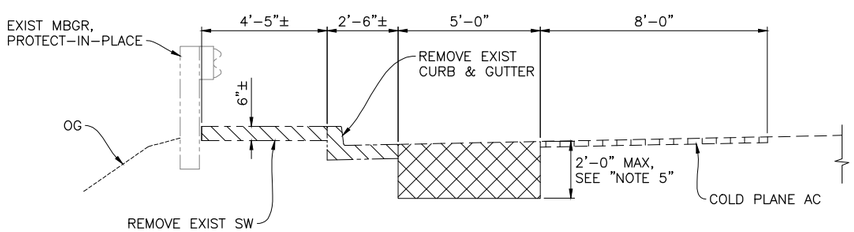

SECTION D-D (REMOVAL)
3/8" = 1'-0"

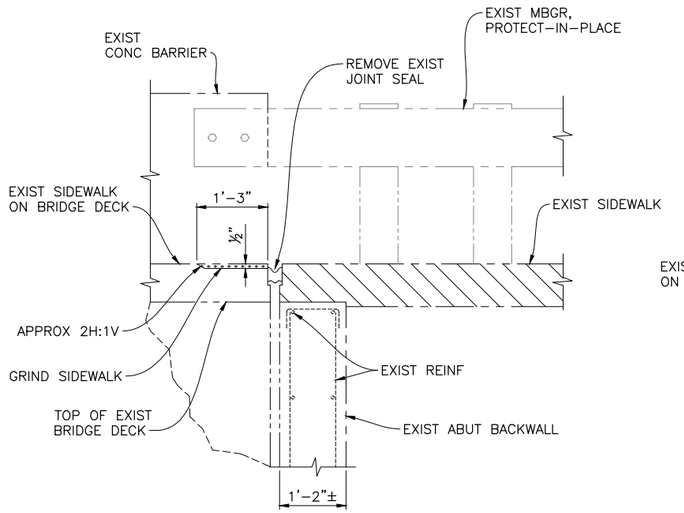

SECTION E-E (REMOVAL)
3/4" = 1'-0"

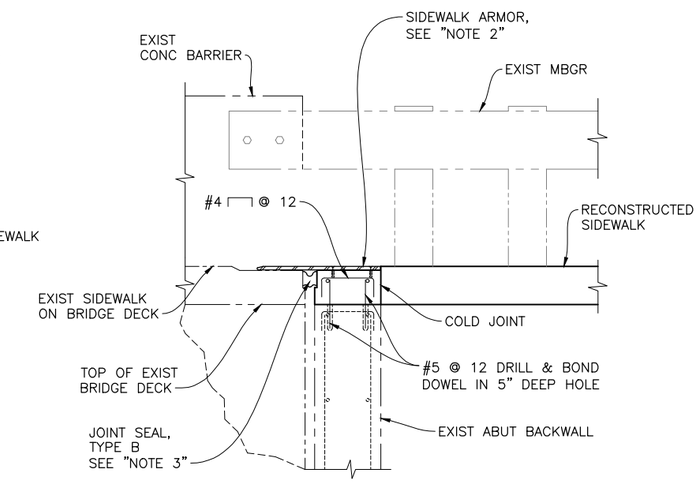

SECTION E-E (REHABILITATION)
3/4" = 1'-0"

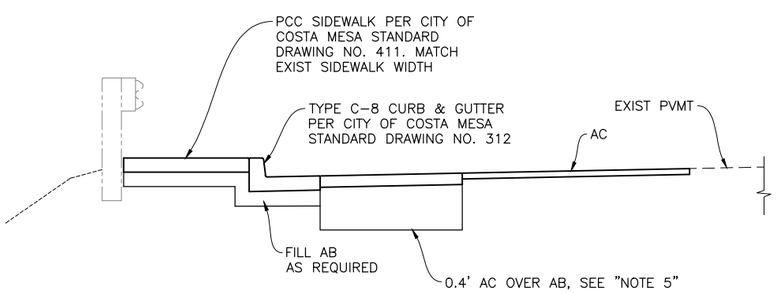

SECTION D-D (REHABILITATION)
3/8" = 1'-0"

THE CONTRACTOR SHALL VERIFY ALL CONTROLLING FIELD DIMENSIONS BEFORE ORDERING OR FABRICATING ANY MATERIAL.

LEGEND

- INDICATES NEW CONSTRUCTION
- INDICATES EXISTING
- DIRECTION OF TRAFFIC
- LIMITS OF SIDEWALK REMOVAL, CURB & GUTTER REMOVAL OR BRIDGE REMOVAL (PORTION)
- LIMITS OF COLD MILL ASPHALT CONCRETE PAVEMENT
- LIMITS OF REMOVE ASPHALT CONCRETE PAVEMENT AND REMOVE ROADWAY STRUCTURAL SECTION
- LIMITS OF SIDEWALK GRIND

NOTES:

1. REMOVAL LIMITS MUST BE APPROVED BY THE ENGINEER.
2. FOR SIDEWALK ARMOR DETAILS, SEE SHEET S7.
3. FOR JOINT SEAL, SEE CALTRANS STD PLAN B6-21.
4. FOR "SECTION C-C", SEE SHEET S5.
5. REMOVE AC TO EXPOSE AB. PLACE AB UP TO 0.4' BELOW PROPOSED SURFACE.
6. PROFILE OF REHABILITATED CURB, GUTTER, AC & SIDEWALK TO BE A STRAIGHT GRADE BETWEEN BRIDGE DECK/SIDEWALK REMOVAL LIMITS.
7. IDENTIFY EXISTING UTILITIES AND PROTECT IN PLACE.

COUNTY OF ORANGE CALIFORNIA

MARK	DESCRIPTION	DATE	APPR.

PREPARED UNDER THE RESPONSIBLE CHARGE OF: REGISTERED CIVIL ENGINEER VIRGINIA MARK STILLER No. C 79935 Exp. 6/30/22 STATE OF CALIFORNIA — 9/24/21 DATE

DESIGNED BY: L. MAHARJAN
DRAWN BY: R. ANDRASEK
CHECKED BY: M. STILLER
DRAWING CODE:
FILE NAME: 12_HAMILTON ABUT 3.DWG
PLOT DATE: 9/24/21
SCALE: AS SHOWN

COUNTY OF ORANGE
OC PUBLIC WORKS

NCM ENGINEERING CORP.
9850 RESEARCH
IRVINE, CALIFORNIA 92618

HAMILTON AVE/VICTORIA ST OVER SANTA ANA RIVER & GREENVILLE BANING CHANNEL PREVENTATIVE MAINTENANCE
Br. No. 55C-0103

ABUTMENT REPAIR
DETAILS NO. 3

Sheet Reference Number
S6

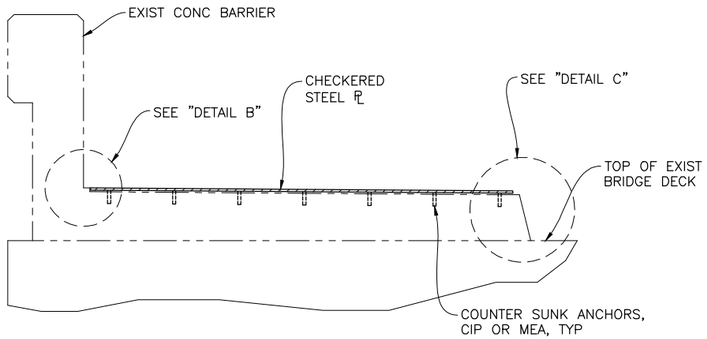

SECTION A–A
NO SCALE

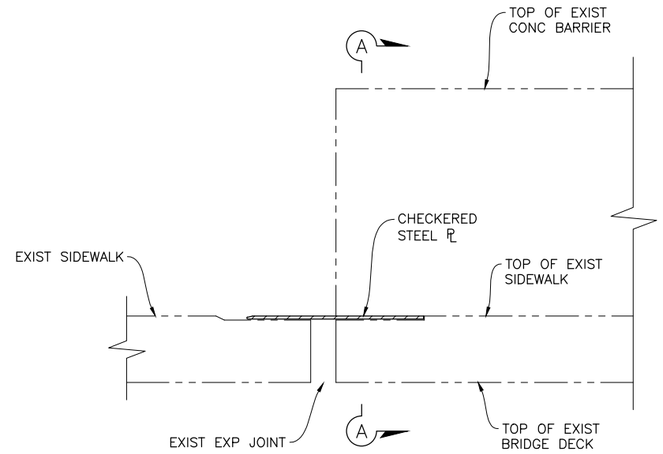

ELEVATION
NO SCALE

LEGEND

– – – – INDICATES EXISTING

NOTES:

1. UTILITY OPENINGS AND EXPANSION JOINTS NOT SHOWN FOR CLARITY.
2. PLATES TO BE GALVANZIED.

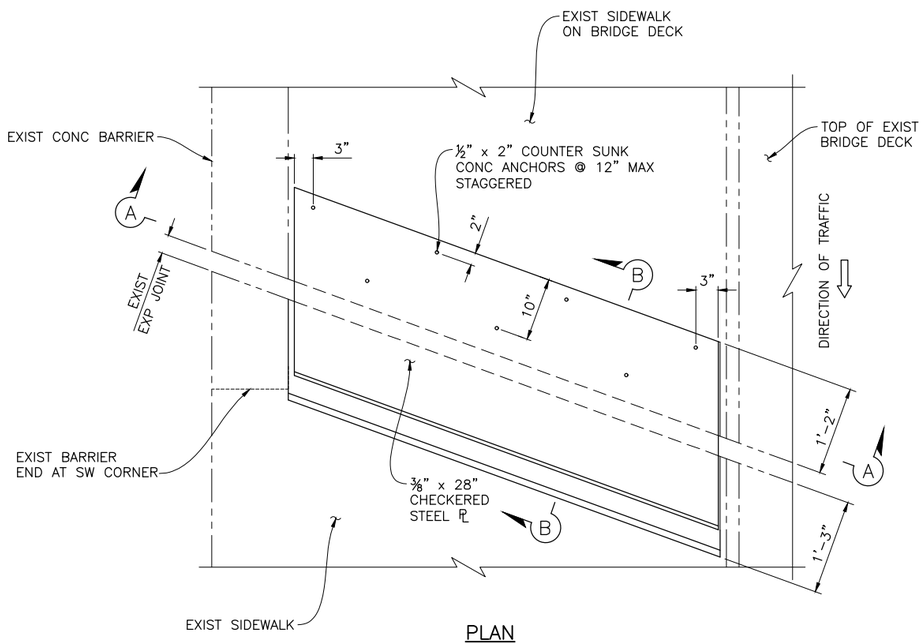

PLAN
NO SCALE

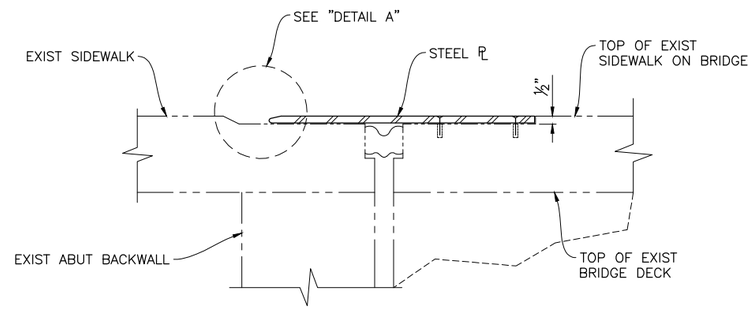

SECTION B–B
NO SCALE

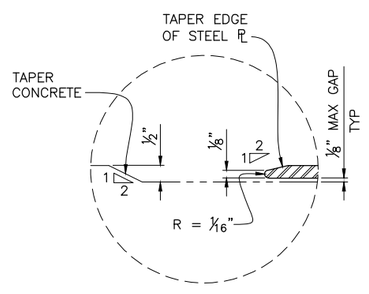

DETAIL A
NO SCALE

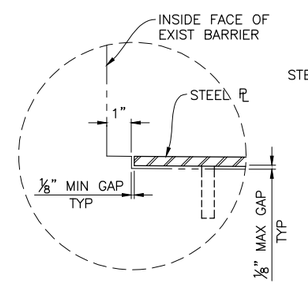

DETAIL B
NO SCALE

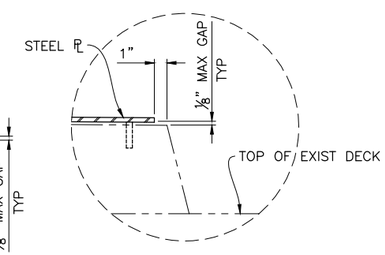

DETAIL C
NO SCALE

THE CONTRACTOR SHALL VERIFY ALL CONTROLLING FIELD DIMENSIONS BEFORE ORDERING OR FABRICATING ANY MATERIAL.

COUNTY OF ORANGE CALIFORNIA

MARK	DESCRIPTION	DATE	APPR.

PREPARED UNDER THE RESPONSIBLE CHARGE OF:
REGISTERED CIVIL ENGINEER MARK STILLER No. C 79935 Exp. 6/30/22 CIVIL STATE OF CALIFORNIA
9/24/21
DATE

DESIGNED BY: L. MAHARJAN
DRAWN BY: R. ANDRASEK
CHECKED BY: M. STILLER
DRAWING CODE:
FILE NAME: 13 HAMILTON DETS.DWG
PLOT DATE: 9/24/21
SCALE: AS SHOWN

COUNTY OF ORANGE
OC PUBLIC WORKS

NCM ENGINEERING CORP.
9850 RESEARCH
IRVINE, CALIFORNIA 92618

HAMILTON AVE/VICTORIA ST
OVER SANTA ANA RIVER &
GREENVILLE BANING CHANNEL
PREVENTATIVE MAINTENANCE
Br. No. 55C-0103

SIDEWALK
JOINT ARMOR

Sheet Reference Number
S7

Looking upstream

Bridge nose and pier walls

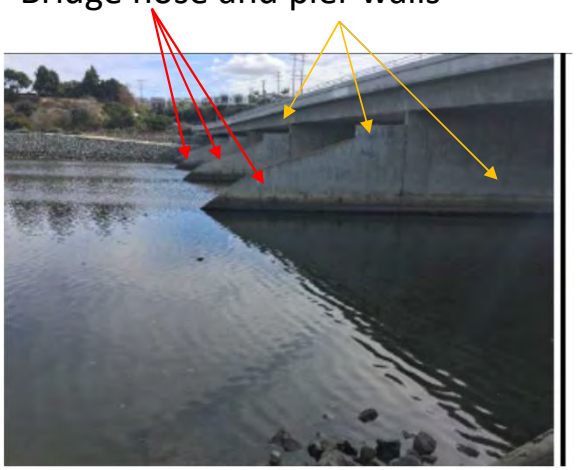

Looking downstream

5-21-0797 OCPW
Hamilton Victoria Bridge Repair
Exhibit 3

Proposed Cofferdam Location
(in orange)
Dewater one side at a time

5-21-0797 OCPW
Exhibit 4

Construction Staging

5-21-0797 OCPW
Exhibit 5a

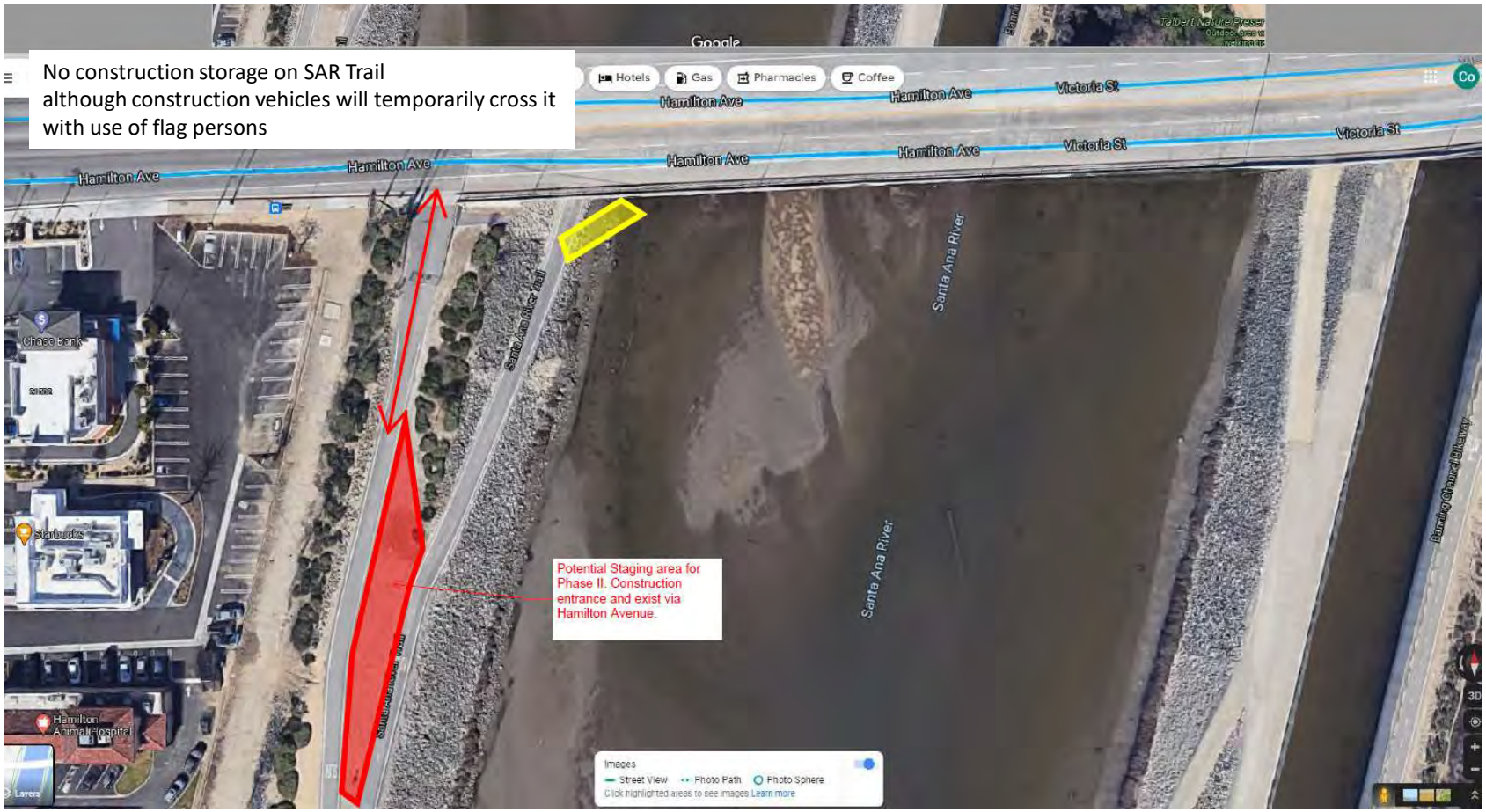

Construction Staging

5-21-0797 OCPW
Exhibit 5b

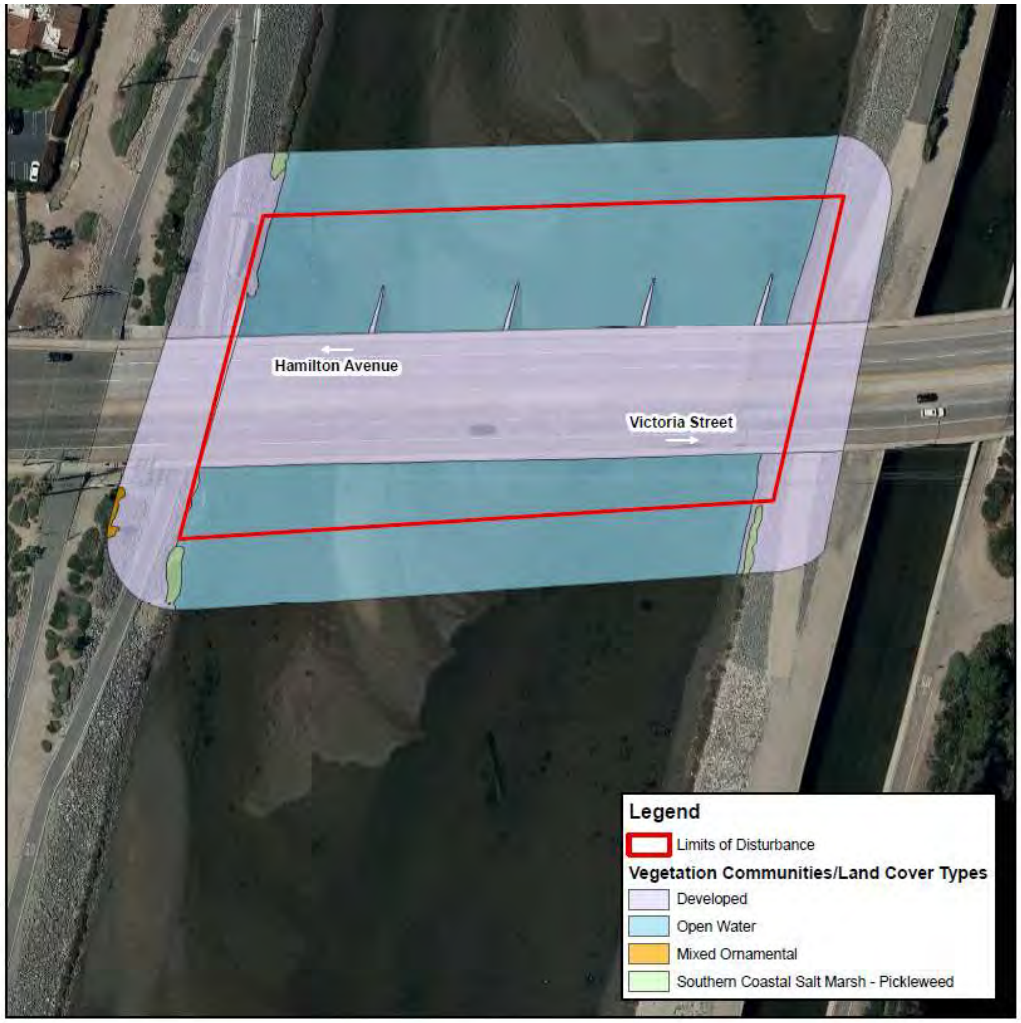

N

OC Public Works

0 35 70 140 210 280 Feet

SB-1 Hamilton/Victoria Bridge Maintenance

Figure 3: Vegetation Communities/Land Cover Types

3/9/2022

Vegetation Communities/Land Cover Types
Biological Technical Report, OCPW, 12/2021

5-21-0797 OCPW
Exhibit 6

Talbert Regional Park: least Bell's vireo and coastal California gnatcatcher suitable habitat

5-21-0797 OCPW
Exhibit 7

One lane of vehicle traffic closed during construction; two way traffic to remain during construction.
Sidewalk and verge on one side to remain open during construction.

5-21-0797 OCPW
Exhibit 8