CALIFORNIA COASTAL COMMISSION
South Coast Area Office
301 E. Ocean Blvd. Suite 300
Long Beach, CA 90802-4302
(562) 590-5071

W8c

5-21-0908 (SCHULMAN)

MAY 11, 2022

EXHIBITS

Exhibit No. 1 – Location Map

Exhibit No. 2 – Project Plans

California Coastal Commission
CDP 5-21-0908
Exhibit 1

BRANDON ARCHITECTS, INC.

SCHULMAN RESIDENCE

1615 E BAY AVE, NEWPORT BEACH CA 92661

LEGEND

- BLOCK WALL
- WOOD FENCE (WDF)
- ℄ — CENTERLINE
- CLF — CHAINLINK FENCE
- FF — FINISHED FLOOR
- FFG — FINISHED FLOOR GARAGE
- FL — FLOWLINE
- FS — FINISHED SURFACE
- GM — GAS METER
- HAG — HIGHEST ADJACENT GRADE
- LAG — LOWEST ADJACENT GRADE
- NG — NATURAL GROUND
- SCO — SEWER CLEANOUT
- TD — TOP OF DECK
- WM — WATER METER
- ( ) — EXISTING ELEVATION
- ○ — SEARCHED, FOUND NOTHING; SET NOTHING
- T.B.M. — TEMPORARY BENCHMARK SET ON A SEWER CLEANOUT ELEVATION = 8.66 FEET
- BRICK SURFACE
- CONCRETE SURFACE
- GRASS

LEGAL DESCRIPTION

REAL PROPERTY SITUATED IN THE CITY OF NEWPORT BEACH, COUNTY OF ORANGE, STATE OF CALIFORNIA AND IS DESCRIBED AS FOLLOWS:

PARCEL: THE WESTERLY 30 FEET OF LOTS 8, 9, 10 & 11 IN BLOCK 25 OF EAST SIDE ADDITION TO THE BALBOA TRACT, AS SHOWN ON A MAP RECORDED IN BOOK 4, PAGE 20 OF MISCELLANEOUS MAPS, CITY OF NEWPORT BEACH, STATE OF CALIFORNIA, RECORDS OF ORANGE COUNTY, CALIFORNIA, THE EASTERLY LINE OF SAID WESTERLY 30 FEET BEING PARALLEL WITH AND DISTANT 30 FEET EASTERLY FROM THE WESTERLY LINE OF SAID LOTS.

PARCEL 2: LOT 8 IN BLOCK P OF BAYFRONT SECTION OF THE BALBOA TRACT, CITY OF NEWPORT BEACH, COUNTY OF ORANGE, STATE OF CALIFORNIA AS SHOWN ON A MAP, RECORDED IN BOOK 6, PAGE 15 OF MISCELLANEOUS MAPS, RECORDS OF ORANGE COUNTY, CALIFORNIA. EXCEPTING THEREFROM THAT PORTION THEREOF LYING NORTHERLY OF THE UNITED STATES GOVERNMENT BULKHEAD LINE BETWEEN STATIONS 109 AND 110 AS SHOWN ON THE "MAP OF NEWPORT BAY, CALIFORNIA, SHOWING THE HARBOR LINES" APPROVED JANUARY 15, 1917 BY WILLIAM H. INGRAM, ASSISTANT SECRETARY OF WAR. ALSO EXCEPTING ANY PORTION THEREOF LYING BELOW THE LINE OF MEAN HIGH TIDE OF THE PACIFIC OCEAN IN NEWPORT BAY.

PARCEL 3: THAT PORTION OF BAY AVENUE, 30 FEET WIDE, AS LAID OUT AND SHOWN ON A MAP OF THE EAST SIDE ADDITION TO THE BALBOA TRACT RECORDED IN BOOK 4, PAGE 20 OF MISCELLANEOUS MAPS, CITY OF NEWPORT BEACH, COUNTY OF ORANGE, STATE OF CALIFORNIA, RECORDS OF ORANGE COUNTY, CALIFORNIA, ABANDONED BY RESOLUTION #4589 OF THE CITY COUNCIL OF THE CITY OF NEWPORT BEACH, CALIFORNIA, A CERTIFIED COPY OF WHICH WAS RECORDED MARCH 4, 1957 IN BOOK 3825, PAGE 352 OF OFFICIAL RECORDS OF SAID ORANGE COUNTY, BOUNDED WESTERLY BY THE NORTHERLY PROLONGATION OF THE WESTERLY LINE OF LOT 8, BLOCK 25 OF SAID EAST SIDE ADDITION, AND BOUNDED EASTERLY BY THE NORTHERLY PROLONGATION OF THE EASTERLY LINE OF THE WESTERLY 30 FEET OF LOT 8, BLOCK 25 OF SAID EAST SIDE ADDITION, SAID EASTERLY LINE BEING PARALLEL WITH AND DISTANT 30 FEET EASTERLY FROM THE WESTERLY LINE OF SAID LINE 8.

TITLE REPORT/EASEMENT NOTES

1615 E. BAY AVENUE
NEWPORT BEACH, CA 92661
(APN: 048-231-39)

NO TITLE REPORT PROVIDED

BENCHMARK INFORMATION

BENCHMARK NO: NB1-4-71

DESCRIBED BY OCS 2002 - FOUND 3 3\4" OCS ALUMINUM BENCHMARK DISK STAMPED "NB1-4-71", SET IN THE TOP OF A 4 IN. BY 4 IN. CONCRETE POST. MONUMENT IS LOCATED IN THE SOUTHEAST CORNER OF THE INTERSECTION OF F STREET AND BALBOA BOULEVARD, 81 FT. SOUTHEASTERLY OF THE CENTERLINE OF F STREET AND 27.3 FT. NORTHEASTERLY OF THE CENTERLINE OF BALBOA BOULEVARD. MONUMENT IS SET LEVEL WITH THE SIDEWALK.

ELEVATION: 7.828 FEET (NAVD88), YEAR LEVELED 2015

BASIS OF BEARINGS

THE BEARINGS SHOWN HEREON ARE BASED ON THE CENTERLINE OF I STREET HAVING A BEARING OF N00°03'01"E PER RSB 316-26.

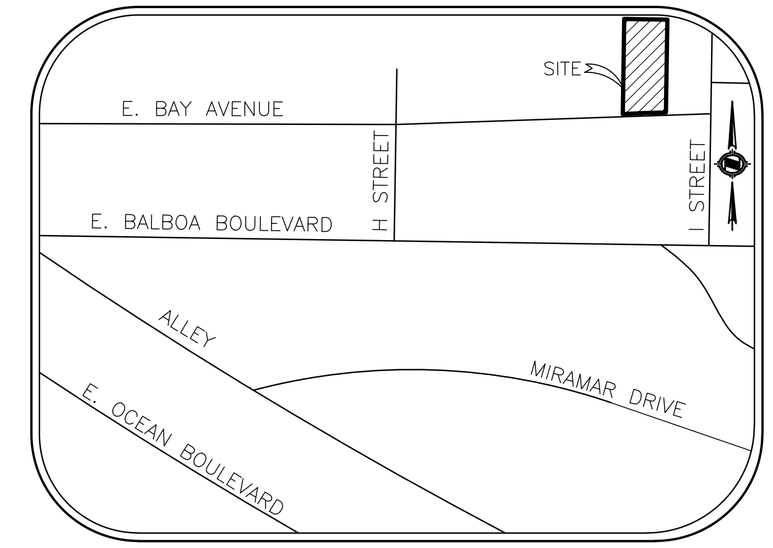

VICINITY MAP
NO SCALE

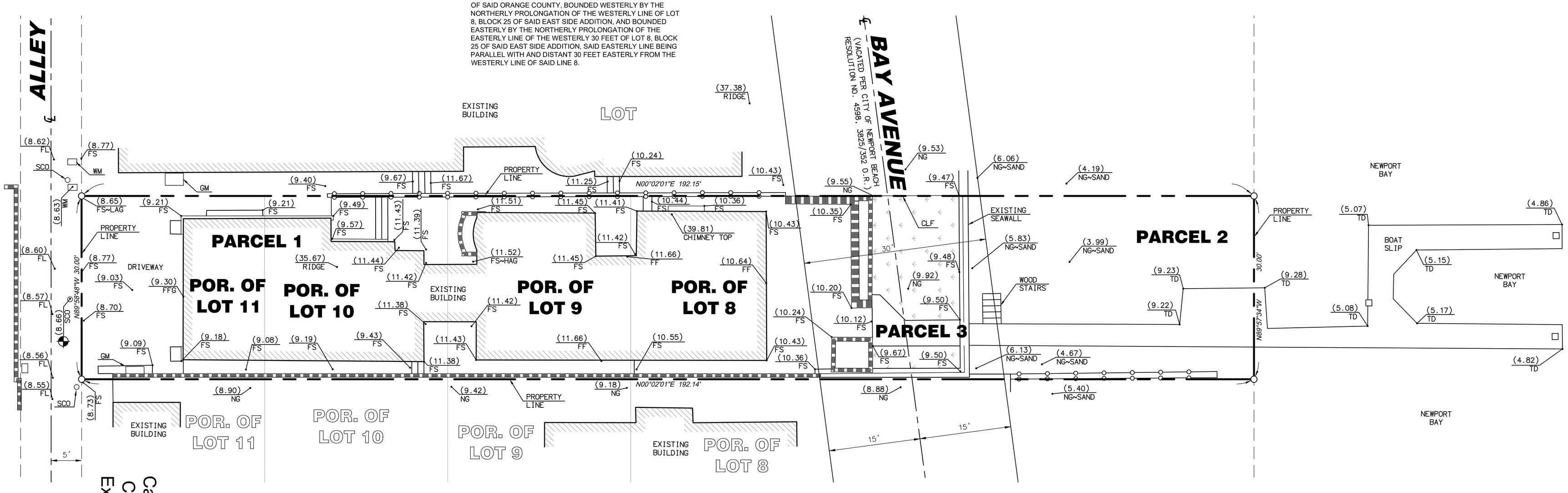

SURVEYOR'S NOTES

SURVEYOR OR ENGINEER SHALL PERMANENTLY MONUMENT PROPERTY CORNERS OR OFFSETS BEFORE STARTING GRADING.

PLEASE CALL PAUL CRAFT @ 714-488-5006 TO SCHEDULE.

GRAPHIC SCALE
4 0 2 4 8 16
(IN FEET)
1 INCH = 8 FT.

PAUL D. CRAFT, P.L.S. 8516 — 11/1/2021 DATE
LICENSE RENEWAL DATE 12/31/22

PROFESSIONAL LAND SURVEYOR PAUL DOMINICK CRAFT No. 8516 Exp. 12/31/22 STATE OF CALIFORNIA

NOTE: SECTION 8770.6 OF THE CALIFORNIA BUSINESS AND PROFESSIONS CODE STATES THAT THE USE OF THE WORD CERTIFY OR CERTIFICATION BY A LICENSED LAND SURVEYOR IN THE PRACTICE OF LAND SURVEYING OR THE PREPARATION OF MAPS, PLATS, REPORTS, DESCRIPTIONS OR OTHER SURVEYING DOCUMENTS ONLY CONSTITUTES AN EXPRESSION OF PROFESSIONAL OPINION REGARDING THOSE FACTS OR FINDINGS WHICH ARE THE SUBJECT OF THE CERTIFICATION AND DOES NOT CONSTITUTE A WARRANTY OR GUARANTEE, EITHER EXPRESSED OR IMPLIED.

REVISIONS			
NO.	DESCRIPTION	DATE	APP'D
1	-----	-	P. D. C.

PROJECT SURVEYOR
APEX LAND SURVEYING INC.
HUNTINGTON BEACH, CALIFORNIA 92646
PHONE:(714)488-5006 FAX:(714)333-4440
APEXLSINC@GMAIL.COM

DATE 12/28/2020
SCALE 1" = 8'
DRAWN J. A. H.
CHECKED P. D. C.

SHEET TITLE: TOPOGRAPHIC MAP
PROJECT: 1615 E BAY AVENUE NEWPORT BEACH, CA 92661 (APN: 048-231-39)

SHEET NO. 1 OF 1

PROJECT NO. 20159

California Coastal Commission
CDP 5-21-0908
Exhibit 2 p. 2 of 7

CONSTRUCTION NOTES:

1. CONSTRUCT 5" MIN CONCRETE DRIVEWAY
2. CONSTRUCT 4" MIN CONCRETE HARDSCAPE PER LANDSCAPE PLAN
3. INSTALL 4" FLAT GRATE DRAIN
4. INSTALL LINEAR SLOT DRAIN
5. INSTALL 4" PVC SDR 35 DRAIN LINE, S=0.01 MIN
6. CONSTRUCT CATCH BASIN PER DETAIL, SHEET C2
7. INSTALL TRENCH DRAIN PER DETAIL SHEET C2
8. REMOVE WATER METER, BOX & COVER. CAP WATER SERVICE AT MAIN(CORP STOP).
9. INSTALL NEW WATER METER WITH TRAFFIC BOX & COVER AND NEW SERVICE PER STD 502.

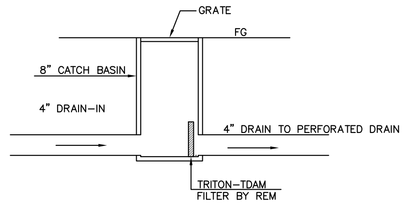

6 8" CATCH BASIN
NTS

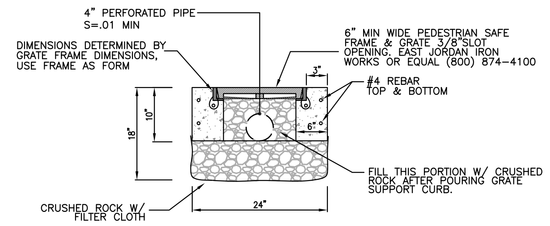

A- DIG A 24" WIDE X 18" DEEP TRENCH
B- PLACE FILTER CLOTH IN THE TRENCH EXTENDING 12" VERTICAL ON EACH SIDE
C- FILL BOTTOM 8" OF THE TRENCH W/ CRUSHED ROCK
D- FORM AND POUR PERIMETER CONCRETE CURB
E- FILL THE REST OF THE TRENCH W/ CRUSHED ROCK TO 4" FROM TOP OF TRENCH

7 TRENCH DRAIN
NTS

ABBREVIATIONS

ARCH	ARCHITECTURAL
A.C.	ASPHALT CONCRETE
BFF	BASEMENT FINISH FLOOR
BFP	BASEMENT FINISH PAD
B.S.P.	BY SEPARATE PERMIT
C.O.	CLEAN OUT
CONC	CONCRETE
DG	DECOMPOSED GRANITE
DS	DOWNSPOUT
DWY	DRIVEWAY
EG	EXISTING GROUND
EMH	ELECTRIC MANHOLE
EP	EDGE OF PAVEMENT
ESMT	EASEMENT
EXIST	EXISTING
FD	FOUND
FF	FINISH FLOOR
FG	FINISH GRADE
FH	FIRE HYDRANT
FL	FLOWLINE
FP	FINISH PAD
FS	FINISH SURFACE
GB	GRADE BREAK
GFF	GARAGE FINISH FLOOR
GFP	GARAGE FINISH PAD
GM	GAS METER
HH	HANDHOLE
HP	HIGH POINT
IE	INVERT ELEVATION
I.P.	IRON PIPE
L&T	LEAD AND TACK
MH	MANHOLE
MON.	MONUMENT
NTG	NOTHING
OG	ORIGINAL GROUND
PA	PLANTER AREA
PB	PULL BOX
PL	PROPERTY LINE
PROP	PROPOSED
P.U.E.	PUBLIC UTILITY EASEMENT
R/W	RIGHT OF WAY
SDWK	SIDEWALK
S.F.N.	SEARCHED FOUND NOTHING
SMH	SEWER MANHOLE
STLT	STREET LIGHT
T.B.M.	TEMPORARY BENCHMARK
TC	TOP OF CURB
TF	TOP OF FOOTING
TFN	TOP OF FENCE
TG	TOP OF GRATE
TOC	TOP OF CONCRETE
TR	TOP OF RAIL
T.O.R.	TOP OF RIDGE
TOS	TOP OF SLAB
TW	TOP OF WALL
WM	WATER METER

California Coastal Commission
CDP 5-21-0908
Exhibit 2 p. 3 of 7

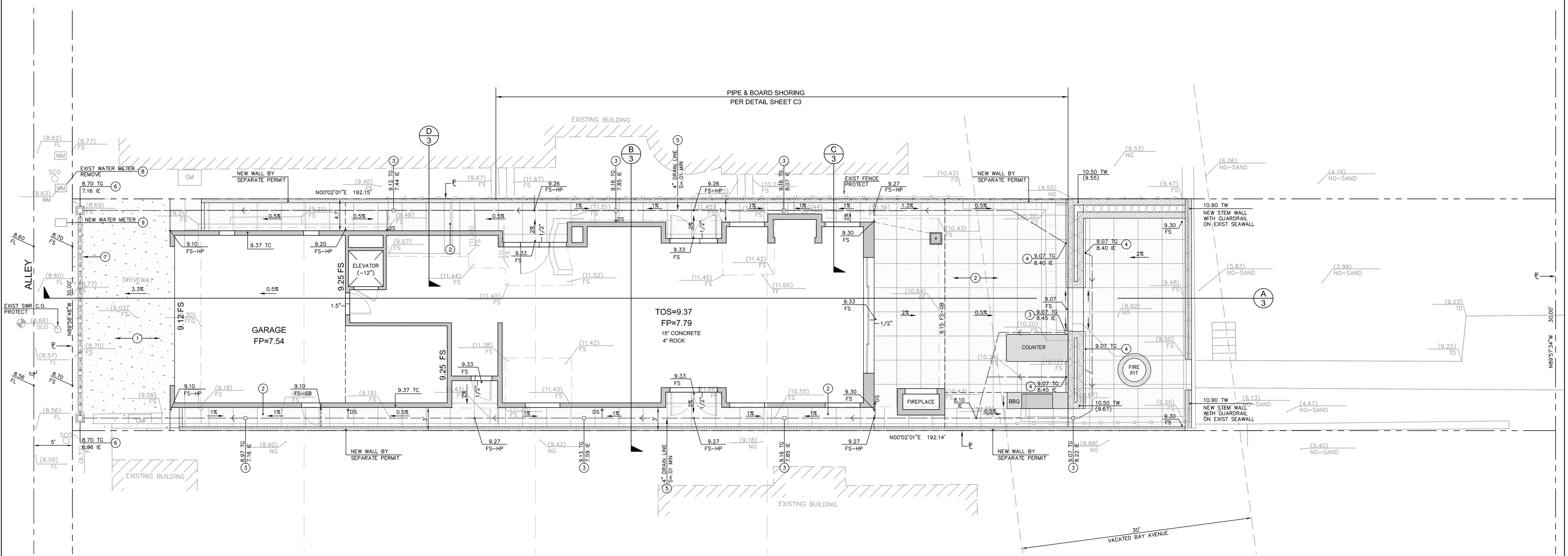

NO.	DATE	REVISIONS
1	10/26/21	REVISED PER PLAN CHECK

DRAWN: MJ
CHCK'D: TR
DATE: 8/23/21

ARCHITECT:
BRANDON ARCHITECTS
151 KALMUS DR.
SUITE G-1
COSTA MESA, CA 92626
(714) 754-4040

OWNER/DEVELOPER:
JAY & NANCY SCHULMAN
1615 E. BAY AVENUE
NEWPORT BEACH, CA 92661

PREPARED BY:
FORKERT ENGINEERING & SURVEYING, INC.
22311 BROOKHURST ST, STE 203
HUNTINGTON BEACH, CA 92646
(714) 963-6793
JN 10217

REGISTERED PROFESSIONAL ENGINEER THOMAS M. RUIZ NO. 58627 EXP. 12-31-22 CIVIL STATE OF CALIFORNIA

THOMAS M. RUIZ 10/26/21
DATE

SOILS ENGINEER/GEOLOGIST:
COAST GEOTECHNICAL
1200 W. COMMONWEALTH AVE
FULLERTON, CA 92833
PH: 714-870-1211

W.O. 613121-01
DATED: APRIL 23, 2021

BENCHMARK:
BENCHMARK NO: NB1-4-71

ELEVATION: 7.828 FEET (NAVD88)
YEAR LEVELED 2015

LEGAL DESCRIPTION:
PARCEL 2; LOT 8 IN BLOCK P OF BAYFRONT SECTION OF THE BALBOA TRACT, CITY OF NEWPORT BEACH, COUNTY OF ORANGE, STATE OF CALIFORNIA

PRECISE GRADING
1615 E. BAY AVENUE
NEWPORT BEACH, CALIFORNIA

SHEET: C2

EROSION CONTROL

1. IN CASE OF EMERGENCY, CALL JAY SCHULMAN
2. A STANDBY CREW FOR EMERGENCY WORK SHALL BE AVAILABLE AT ALL TIMES DURING THE RAINY SEASON (OCTOBER 1 TO APRIL 15). NECESSARY MATERIALS SHALL BE AVAILABLE ON-SITE AND STOCKPILED AT CONVENIENT LOCATIONS TO FACILITATE RAPID CONSTRUCTION OF EMERGENCY DEVICES WHEN RAIN IS IMMINENT.
3. EROSION CONTROL DEVICES SHOWN ON THIS PLAN MAY BE REMOVED WHEN APPROVED BY THE BUILDING OFFICIAL IF THE GRADING OPERATION HAS PROGRESSED TO THE POINT WHERE THEY ARE NO LONGER REQUIRED.
4. GRADED AREAS ADJACENT TO FILL SLOPES LOCATED AT THE SITE PERIMETER MUST DRAIN AWAY FROM THE TOP OF SLOPE AT THE CONCLUSION OF EACH WORKING DAY. ALL LOOSE SOILS AND DEBRIS THAT MAY CREATE POTENTIAL HAZARD TO OFF-SITE PROPERTY SHALL BE STABILIZED OR REMOVED FROM THE SITE ON A DAILY BASIS.
5. ALL SILT AND DEBRIS SHALL BE REMOVED FROM ALL DEVICES WITHIN 24 HOURS AFTER EACH RAINSTORM AND BE DISPOSED OF PROPERLY.
6. A GUARD SHALL BE POSTED ON THE SITE WHENEVER THE DEPTH OF WATER IN ANY DEVICE EXCEEDS 2 FEET. THE DEVICE SHALL BE DRAINED OR PUMPED DRY WITHIN 24 HOURS AFTER EACH RAINSTORM. PUMPING AND DRAINING OF ALL BASINS AND DRAINAGE DEVICES MUST COMPLY WITH THE APPROPRIATE BMP FOR DEWATERING OPERATIONS.
7. THE PLACEMENT OF ADDITIONAL DEVICES TO REDUCE EROSION DAMAGE AND CONTAIN POLLUTANTS WITHIN THE SITE IS LEFT TO THE DESCRETION OF THE FIELD ENGINEER. ADDITIONAL DEVICES, AS NEEDED, SHALL BE INSTALLED TO RETAIN SEDIMENTS AND OTHER POLLUTANTS ON SITE.
8. DESILTING BASINS MAY NOT BE REMOVED OR MADE INOPERABLE BETWEEN NOVEMBER 1 AND APRIL 15 OF THE FOLLOWING YEAR WITHOUT THE APPROVAL OF THE BUILDING OFFICIAL.
9. STORM WATER POLLUTION AND EROSION CONTROL DEVICES ARE TO BE MODIFIED, AS NEEDED, AS THE PROJECT PROGRESSES. THE DESIGN AND PLACEMENT OF THESE DEVICES IS THE RESPONSIBILITY OF THE FIELD ENGINEER. PLANS REPRESENTING CHANGES MUST BE SUBMITTED FOR APPROVAL IF REQUESTED BY THE BUILDING OFFICIAL.
10. EVERY EFFORT SHALL BE MADE TO ELIMINATE THE DISCHARGE OF NON-STORM WATER FROM THE PROJECT SITE AT ALL TIMES.
11. ERODED SEDIMENTS AND OTHER POLLUTANTS MUST BE RETAINED ON-SITE AND MAY NOT BE TRANSPORTED FROM THE SITE VIA SHEET FLOW, SWALES, AREA DRAINS, NATURAL DRAINAGE COURSES, OR WIND.
12. STOCKPILES OF EARTH AND OTHER CONSTRUCTION RELATED MATERIALS MUST BE PROTECTED FROM BEING TRANSPORTED FROM THE SITE BY THE FORCES OR WIND OR WATER.
13. FUELS, OILS, SOLVENTS, AND OTHER TOXIC MATERIALS MUST BE STORED IN ACCORDANCE WITH THEIR LISTING AND ARE NOT CONTAMINATE THE SOILS AND SURFACE WATERS. ALL APPROVED STORAGE CONTAINERS ARE THE BE PROTECTED FROM THE WEATHER. SPILLS MUST BE CLEANED UP IMMEDIATELY AND DISPOSED OF IN A PROPER MANNER. SPILLS MAY NOT BE WASHED INTO THE DRAINAGE SYSTEM.
14. EXCESS WASTE CONCRETE MAY NOT BE WASHED INTO THE PUBLIC WAY OR ANY OTHER DRAINAGE SYSTEM. PROVISIONS SHALL BE MADE TO RETAIN CONCRETE WASTES ON-SITE UNTIL THEY CAN BE DISPOSED OF AS A SOLID WASTE.
15. DEVELOPERS/CONTRACTORS ARE RESPONSIBLE TO INSPECT ALL EROSION CONTROL DEVICES AND BMP'S ARE INSTALLED AND FUNCTIONING PROPERLY IF THERE IS A 40% CHANCE OF QUARTER INCH OR MORE OF PREDICTED PRECIPITATION, AND AFTER ACTUAL PRECIPITATION. A CONSTRUCTION SITE INSPECTION CHECKLIST AND INSPECTION LOG SHALL BE MAINTAINED AT THE PROJECT SITE AT ALL TIMES AND AVAILABLE FOR REVIEW BY THE BUILDING OFFICIAL (COPIES OF THE SELF-INSPECTION CHECKLIST AND INSPECTION LOGS ARE AVAILABLE UPON REQUEST).
16. TRASH AND CONSTRUCTION RELATED SOLID WASTES MUST BE DEPOSITED INTO A COVERED RECEPTACLE TO PREVENT CONTAMINATION OF RAINWATER AND DISPERSAL BY WIND.
17. SEDIMENTS AND OTHER MATERIALS MAY NOT BE TRACKED FROM THE SITE BY VEHICLE TRAFFIC. THE CONSTRUCTION ENTRANCE ROADWAYS MUST BE STABILIZED SO AS TO INHIBIT SEDIMENTS FROM BEING DEPOSITED INTO THE PUBLIC WAY. ACCIDENTAL DEPOSITIONS MUST BE SWEPT UP IMMEDIATELY AND MAY NOT BE WASHED DOWN BY RAIN OR OTHER MEANS.
18. ANY SLOPES WITH DISTURBED SOIL OR DENUDED OF VEGETATION MUST BE STABILIZED SO AS TO INHIBIT EROSION BY WIND AND WATER.
19. HOME OWNER TO ROUTINELY CLEAN ALL CATCH BASINS AND DRAIN LINES OF DEBRIS.
20. ADDITIONAL BMP'S WILL BE IMPLEMENTED AS DEEMED NECESSARY BY CITY INSPECTORS.

BMP FACTS SHEET

WM-1 MATERIAL DELIVERY AND STORAGE

PROVIDE A MATERIAL STORAGE AREA WITH SECONDARY CONTAINMENT AND/OR WEATHER PROTECTION. NOTE THE MAINTENANCE PRACTICES AND SCHEDULE PROPOSED FOR THIS AREA.

WM-2 MATERIAL USE

HAZARDOUS MATERIALS, FERTILIZERS, PESTICIDES, PLASTERS, SOLVENTS, PAINTS, AND OTHER COMPOUNDS MUST BE PROPERLY HANDLED IN ORDER TO REDUCE THE RISK OF POLLUTION OR CONTAMINATION. TRAINING AND INFORMATION ON PROCEDURES FOR THE PROPER USE OF ALL MATERIALS MUST BE AVAILABLE TO THE EMPLOYEES THAT APPLY SUCH MATERIALS.

WM-4 SPILL PREVENTION AND CONTROL

IDENTIFY SPILL PREVENTION AND CONTROL MEASURES THAT WILL BE TAKEN FOR ALL PROPOSED MATERIALS. IDENTIFY THE METHODS, BY WHICH ACCIDENTAL SPILLS WILL BE CLEANED AND PROPERLY DISPOSED OF.

WM-5 SOLID WASTE MANAGEMENT

PROVIDE DESIGNATED WASTE COLLECTION AREAS AND CONTAINERS. ARRANGE FOR REGULAR DISPOSAL. PROVIDE COVERED STORAGE WITH SECONDARY CONTAINMENT. CONTAINERS ARE REQUIRED TO PROTECT WASTE FROM RAIN TO PREVENT WATER POLLUTION AND PREVENT WIND DISPERSAL.

WM-6 HAZARDOUS WASTE MANAGEMENT

HAZARDOUS MATERIALS MUST BE DISPOSED OF IN ACCORDANCE WITH STATE AND FEDERAL REGULATIONS. IDENTIFY THE PROPOSED METHODS OF DISPOSAL AND ANY SPECIAL HANDLING CONTRACTS THAT MAY BE APPLICABLE.

WM-7 CONTAMINATED SOIL MANAGEMENT

PREVENT OR REDUCE THE DISCHARGE OR POLLUTANTS TO STORM WATER FROM CONTAMINATED SOIL AND HIGHLY ACIDIC OR ALKALINE SOILS BY CONDUCTING PRE-CONSTRUCTION SURVEYS, INSPECTING EXCAVATIONS REGULARLY, AND REMEDIATING CONTAMINATED SOIL PROMPTLY.

WM-8 CONCRETE WASTE MANAGEMENT

STORE DRY AND WET MATERIALS UNDER COVER. AVOID ON-SITE WASHOUT EXCEPT IN DESIGNATED AREAS AWAY FROM DRAINS, DITCHES, STREETS, AND STREAMS. CONCRETE WASTE DEPOSITED ON-SITE SHALL SET UP, BE BROKEN APART, AND DISPOSED OF PROPERLY. CONTAINMENT AND PROPER DISPOSAL IS REQUIRED FOR ALL CONCRETE WASTE.

WM-9 SANITARY/SEPTIC WASTE MANAGEMENT

UNTREATED RAW WASTEWATER IS NOT TO BE DISCHARGED OR BURIED. SANITARY SEWER FACILITIES ON-SITE ARE REQUIRED TO BE IN COMPLIANCE WITH LOCAL HEALTH AGENCY REQUIREMENTS. SANITARY OR SEPTIC WASTES MUST BE TREATED OR DISPOSED OF IN ACCORDANCE WITH STATE AND LOCAL REQUIREMENTS.

TC-1 STABILIZED CONSTRUCTION ENTRANCE

A STABILIZED ENTRANCE IS REQUIRED FOR ALL CONSTRUCTION SITES TO ENSURE THAT DIRT AND DEBRIS ARE NOT TRACKED ONTO THE ROAD OR ADJACENT PROPERTY. MAINTENANCE OF SUCH A SYSTEM IS REQUIRED FOR THE DURATION OF THE PROJECT. SUCH STABILIZATION MAY BE OF ROCK OR PAVED.

SE-1 SILT FENCE

SE-3 SEDIMENT TRAP

SE-8 GRAVEL BAGS

ERODED SEDIMENTS MUST BE RETAINED ON-SITE AND NOT PERMITTED TO ENTER THE DRAINAGE SYSTEM. REQUIREMENT MAY BE WAIVED AT THE SOLE DISCRETION OF THE CITY INSPECTOR IF OTHER EROSION CONTROL BMP'S ARE DEEMED SUFFICIENT.

BMP FACTS SHEET

ALL BMP'S SHALL BE IN ACCORDANCE WITH MODEL BMP'S FROM THE CALIFORNIA STORM WATER BMP HANDBOOK FOR CONSTRUCTION AT WWW.CABMPHANDBOOKS.COM

(EC1) CONSTRUCT GRAVEL BAG EROSION CONTROL ALONG PROPERTY LINES EXCEPT DRIVEWAY APPROACHES. THE SAND BAGS SHOULD BE 24" WIDE AND 10" HIGH. MINIMUM PER DETAIL HEREON AND IN ACCORDANCE WITH BMP FACTS SHEET #SE-8.

(EC2) CONSTRUCT SANITARY WASTE MANAGEMENT AREA IN ACCORDANCE WITH BMP FACTS SHEET #WM-9.

(EC3) CONSTRUCT MATERIALS STORAGE AREA IN ACCORDANCE WITH BMP FACTS SHEET #WM-1.

(EC4) EXISTING WALL TO REMAIN. PROTECT IN PLACE.

EROSION CONTROL LEGEND

PLACE GRAVEL BAGS AND FENCE WITH WIND SCREEN

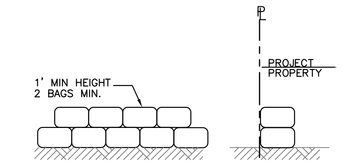

GRAVEL BAG DETAIL
NTS

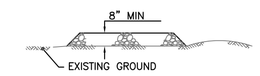

PROVIDE APPROPRIATE TRANSITION BETWEEN STABILIZED CONSTRUCTION ENTRANCE AND STREET

CONSTRUCTION ENTRANCE
NTS

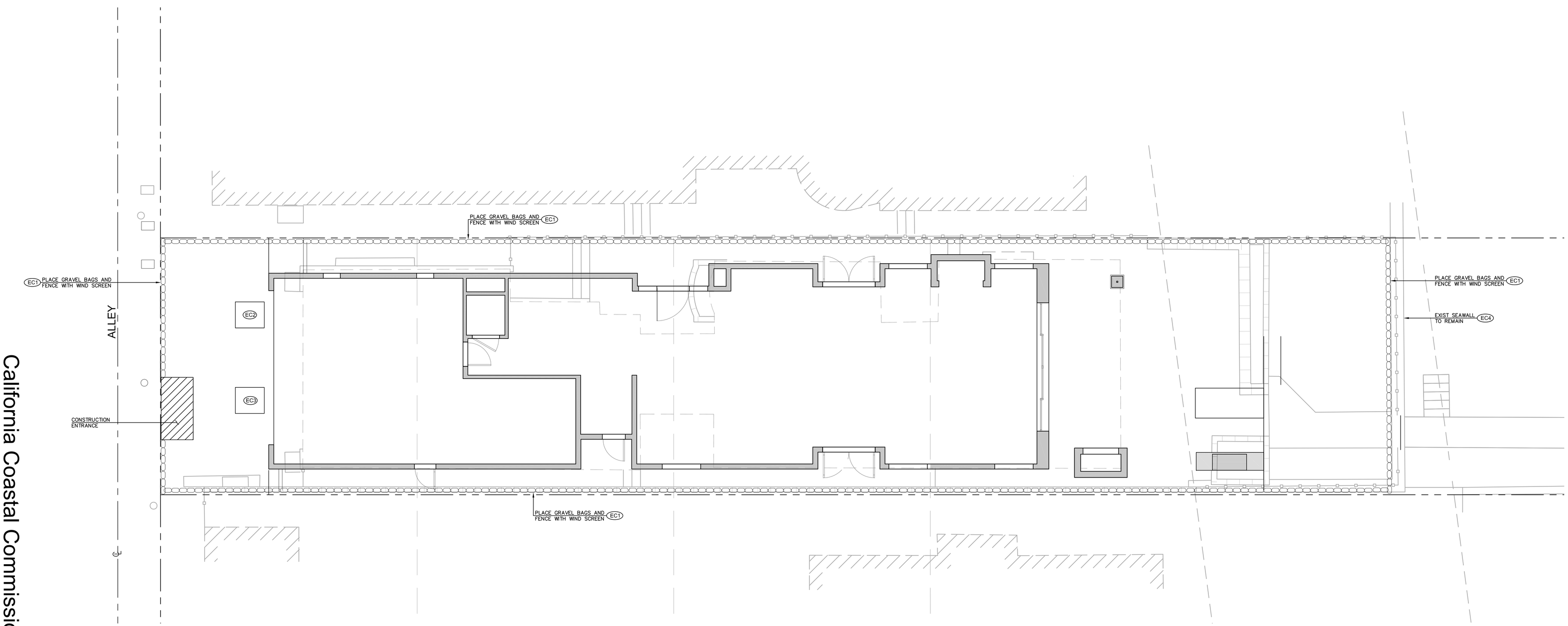

N

1"=5'

NO.	DATE	REVISIONS

DRAWN: MJ
CHCK'D: TR
DATE: 8/23/21

ARCHITECT:
BRANDON ARCHITECTS
151 KALMUS DR.
SUITE G-1
COSTA MESA, CA 92626
(714) 754-4040

OWNER/DEVELOPER:
JAY & NANCY SCHULMAN
1615 E. BAY AVENUE
NEWPORT BEACH, CA 92661

PREPARED BY:
FORKERT ENGINEERING & SURVEYING, INC.
22311 BROOKHURST ST, STE 203
HUNTINGTON BEACH, CA 92646
(714) 963-6793
JN 10217

REGISTERED PROFESSIONAL ENGINEER THOMAS M. RUIZ NO. 58627 EXP. 12-31-22 CIVIL STATE OF CALIFORNIA

THOMAS M. RUIZ 10/26/21 DATE

SOILS ENGINEER/GEOLOGIST:
COAST GEOTECHNICAL
1200 W. COMMONWEALTH AVE
FULLERTON, CA 92833
PH: 714-870-1211

W.O. 613121-01
DATED: APRIL 23, 2021

BENCHMARK:
BENCHMARK NO: NB1-4-71

ELEVATION: 7.828 FEET (NAVD88)
YEAR LEVELED 2015

LEGAL DESCRIPTION:
PARCEL 2: LOT 8 IN BLOCK P OF BAYFRONT SECTION OF THE BALBOA TRACT, CITY OF NEWPORT BEACH, COUNTY OF ORANGE, STATE OF CALIFORNIA

CONSTRUCTION POLLUTION PREVENTION PLAN
(EROSION CONTROL PLAN)
1615 E. BAY AVENUE
NEWPORT BEACH, CA

SHEET: C4

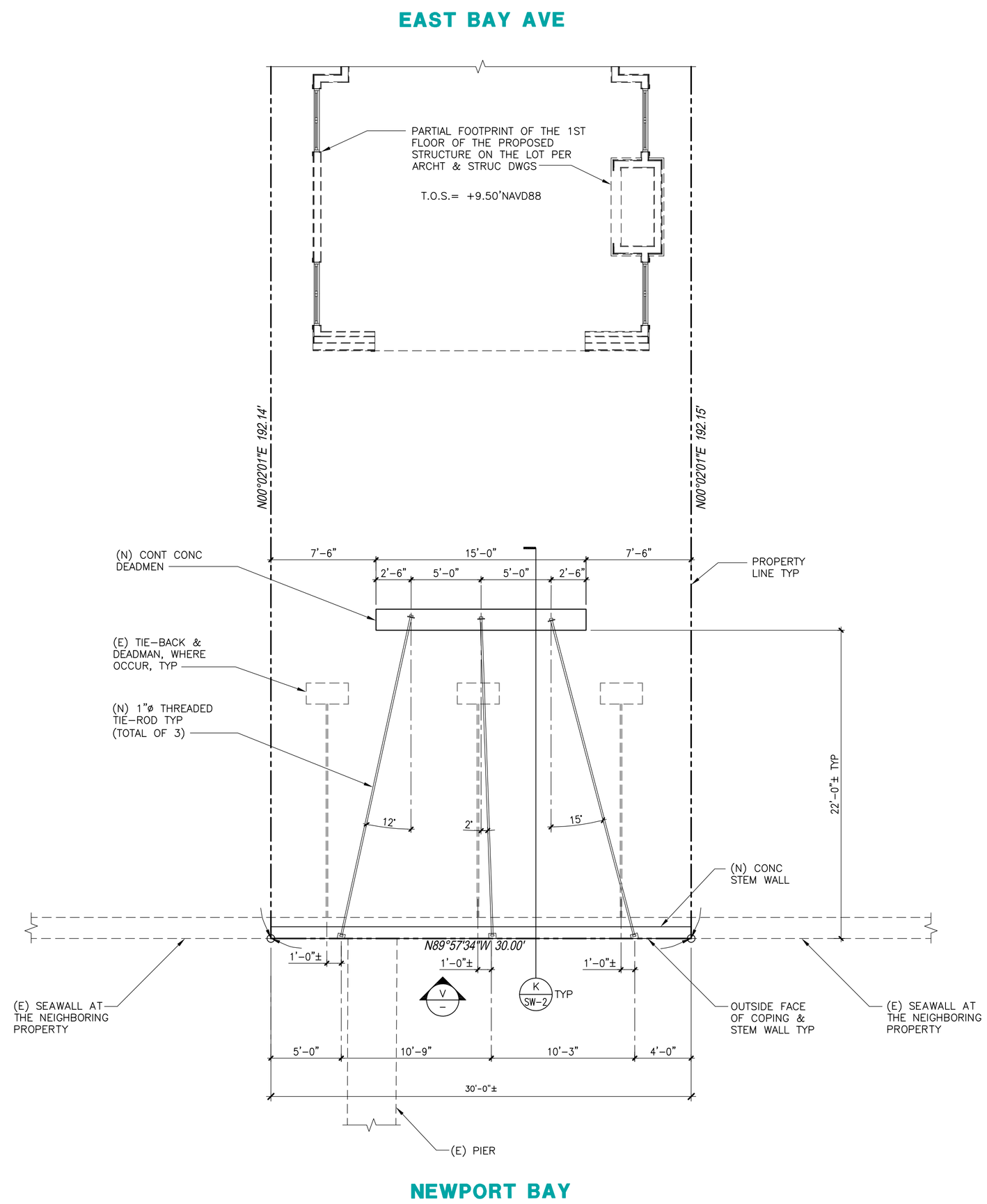

APPLY DETAIL R/SW-2 AT THE ENTIRE PERIMETER OF ANY EXCAVATED MATERIAL PILED UP AT THE PROJECT SITE IN COMPLIAQNCE WITH ITEM 6 UNDER "EROSION CONTROL NOTES" ON SHEET S-0.

SITE PLAN | N.T.S. | Q

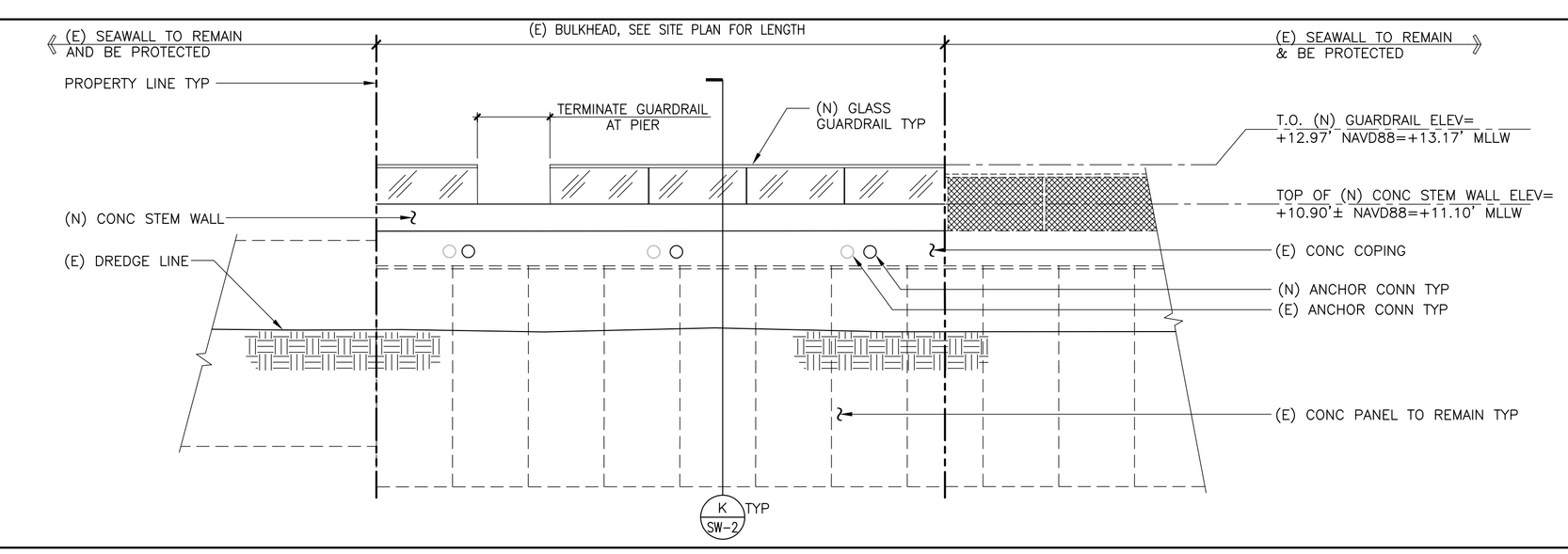

BULKHEAD ELEVATION | N.T.S. | V

CITY OF NEWPORT BEACH
COMMUNITY DEVELOPMENT DEPARTMENT | BUILDING DIVISION

STRUCTURAL OBSERVATION GENERAL NOTES

1. STRUCTURAL OBSERVATION IS REQUIRED FOR THIS PROJECT IN ACCORDANCE WITH CBC 1710. STRUCTURAL OBSERVATION IS THE VISUAL OBSERVATION OF THE STRUCTURAL SYSTEM BY A LICENSED DESIGN PROFESSIONAL FOR GENERAL CONFORMANCE TO THE APPROVED CONSTRUCTION DOCUMENTS.
2. STRUCTURAL OBSERVATION DOES NOT WAIVE THE RESPONSIBILITY FOR THE REQUIRED INSPECTIONS BY THE CITY OF NEWPORT BEACH.
3. THE OWNER SHALL EMPLOY A LICENSED DESIGN PROFESSIONAL TO PERFORM STRUCTURAL OBSERVATION SITE VISITS, AND TO ISSUE ALL STRUCTURAL OBSERVATION REPORTS.
4. THE DESIGN ENGINEER SHALL IDENTIFY THE REQUIRED STRUCTURAL OBSERVATION SITE VISITS ON THE STRUCTURAL OBSERVATION SCHEDULE.
5. THE REQUIRED SITE VISITS SHALL AT A MINIMUM INCLUDE THE FOLLOWING:
   - A. OBSERVATION OF THE FOUNDATION SYSTEM PRIOR TO FINAL CONCRETE POUR;
   - B. OBSERVATION OF BUILDING FRAMING PRIOR TO CALLING FOR THE CITY OF NEWPORT BEACH "COMPLETE FRAMING INSPECTION"; AND,
   - C. FINAL OBSERVATION OF THE COMPLETED STRUCTURE.

   ADDITIONAL SITE VISITS MAY BE NEEDED AS DETERMINED BY THE DESIGN ENGINEER OR STRUCTURAL OBSERVER.
6. THE STRUCTURAL OBSERVER SHALL PREPARE A STRUCTURAL OBSERVATION REPORT FOR EACH STAGE OF CONSTRUCTION OBSERVED. THE CITY OF NEWPORT BEACH "STRUCTURAL OBSERVATION REPORT" FORM, OR A SIMILARLY FORMATTED REPORT, SHALL BE USED FOR ALL STRUCTURAL OBSERVATION REPORT.
7. IF THE CITY'S FORM IS NOT USED, REPORTS SHALL BE ON STRUCTURAL OBSERVER'S LETTERHEAD. STATE SITE ADDRESS, PLAN CHECK & PERMIT NUMBERS, STAGES & ELEMENTS OBSERVED, DATE OBSERVED, & COMPLETE CONTACT INFORMATION FOR STRUCTURAL OBSERVER.
8. ALL STRUCTURAL OBSERVATION REPORTS, REGARDLESS OF FORM USED, SHALL INCLUDE THE LICENSE STAMP & SIGNATURE OF THE STRUCTURAL OBSERVER RESPONSIBLE FOR THE PROJECT.
9. EACH STRUCTURAL OBSERVATION REPORT SHALL BE GIVEN TO THE OWNER OR OWNER'S REPRESENTATIVE, PROJECT CONTRACTOR, AND THE BUILDING INSPECTOR.
10. THE CONTRACTOR SHALL RESOLVE ALL DEFICIENCIES & THE FINAL STRUCTURAL OBSERVATION REPORT ISSUED PRIOR TO FINAL INSPECTION OR ACCEPTANCE OF STRUCTURAL WORK BY THE BUILDING INSPECTOR.
11. THE FINAL STRUCTURAL OBSERVATION REPORT SHALL STATE THAT THE STRUCTURAL SYSTEM CONFORMS TO THE APPROVED CONSTRUCTION DOCUMENTS & THAT ALL PREVIOUSLY OBSERVED DEFICIENCIES HAVE BEEN CORRECTED.
12. FINAL INSPECTION OR OTHER ACCEPTANCE OF THE STRUCTURAL SYS- TEM BY THE CHIEF BUILDING OFFICIAL, OR DESIGNEE, WILL NOT OCCUR UNTIL THE FINAL STRUCTURAL OBSERVATION REPORT IS RECEIVED.
13. THE LICENSED DESIGN PROFESSIONAL IN RESPONSIBLE CHARGE SHALL PREPARE ALL CONSTRUCTION DOCUMENT CHANGES RELATING TO THE STRUCTURAL SYSTEMS. REVIEW & APPROVAL OF SUCH CHANGES BY THE CHIEF BUILDING OFFICIAL, OR DESIGNEE, SHALL BE OBTAIN BY THE DESIGN PROFESSIONAL AND/OR CONTRACTOR PRIOR TO INSTALLATION AND/OR CONSTRUCTION OF SAID CHANGES.

STRUCTURAL OBSERVATION SCHEDULE

SITE ADDRESS: 1615 EAST BAY AVE | **PC #:**

TO BE COMPLETED BY THE DESIGN ENGINEER, AND INCLUDED ON THE CONSTRUCTION DRAWINGS.
BASED ON THE PROJECT SCOPE, PLEASE IDENTIFY THE ELEMENTS AND/OR CONNECTIONS THAT REQUIRE STRUCTURAL OBSERVATION. SPECIFY THE INTERVAL OR STAGE OF CONSTRUCTION WHEN THE STRUCTURAL OBSERVATION WILL BE PERFORMED.

TYPE	STRUCTURAL ELEMENTS AND/OR CONNECTIONS TO BE OBSERVED	SCHEDULED INTERVAL OR STAGE OF CONSTRUCTION
FOUNDATIONS	☐ FOOTINGS, SLAB FOUNDATION, ANCHORS	
	☐ MAT FOUNDATION, PRESTRESSED CONC. SLAB	
	☐ CAISSON, PILE, GRADE BEAM	
	■ OTHER: DEADMEN & TIE-BACKS CONNECTIONS TO IT	PRIOR TO POURING CONCRETE
SHEAR WALLS	■ CONCRETE STEM WALL	PRIOR TO POURING CONCRETE
	☐ MASONRY	
	☐ WOOD OR MANUFACTURED SHEAR PANELS	
	☐ OTHER:	
FRAMES	☐ STEEL MOMENT OR BRACED FRAME	
	☐ CONCRETE MOMENT FRAME	
	☐ MASONRY WALL FRAME	
	☐ OTHER:	
DIAPHRAGMS	☐ CONCRETE	
	☐ STEEL DECK	
	☐ WOOD	
	☐ OTHER:	
FINAL	■ FINAL OBSERVATION & REPORT	

FORM6STRUCTURAL OBSERVATION GENERAL NOTES & SCHEDULE 10.2011

California Coastal Commission
CDP 5-21-0908
Exhibit 2 p. 5 of 7

NO.	REVISIONS	DATE

DISTRIBUTION OF DOCUMENTS
THESE DOCUMENTS ARE INSTRUMENTS OF SERVICE OF THE PMA CONSULTING, INC. AND ARE THE PROPERTY OF THE PMA CONSULTING, INC. THE REPRODUCTION, PUBLICATION OR USE OF THIS DOCUMENT BY ANY PERSON OTHER THAN THE OWNER OF THE PROPERTY FOR WHICH THE DOCUMENT WAS PREPARED IS NOT PERMITTED WITHOUT THE WRITTEN CONSENT OF PMA CONSULTING, INC.

REGISTERED PROFESSIONAL ENGINEER
PLAMEN BORTSSOV PETROV
No.C 66947
CIVIL
STATE OF CALIFORNIA
08/18/2021

PMA Consulting, Inc.
Consulting Structural Engineers
28161 Casitas Ct., Laguna Niguel, CA 92677
Phone: (714) 771-5942
E-Mail: PPetrov@PMAEng.com

OWNER / APPLICANT
JAY & NANCY SCHULMAN
16201 MEADOWRIDGE WAY
ENCINO, CA 91436

REINFORCING THE EXISTING SEAWALL
LOCATED AT:
1615 EAST BAY AVE
NEWPORT BEACH, CA 92661

SITE PLAN & ELEVATION

DATE	JOB NO.	DRAWN	CHECKED
08/18/2021	41121	T. PETROV	P.PETROV

SHEET OF

SW-1

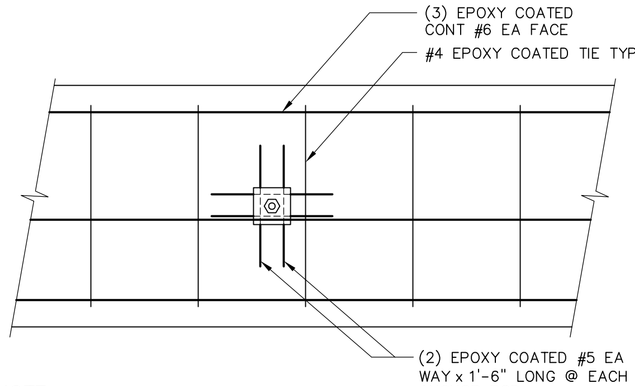

NOTE :
FOR INFORMATION NOT SHOWN, SEE DETAIL (B).

DEADMEN ELEVATION — N.T.S. — A

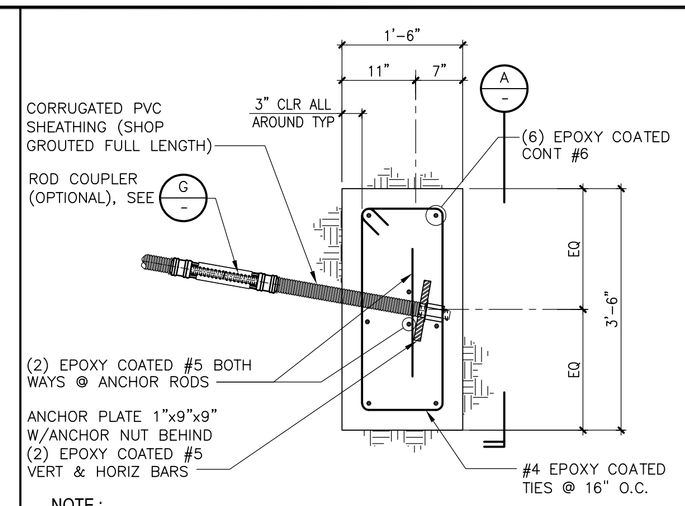

NOTE :
FOR INFORMATION NOT SHOWN, SEE DETAILS (A) & (K).

SECTION AT DEADMEN — N.T.S. — B

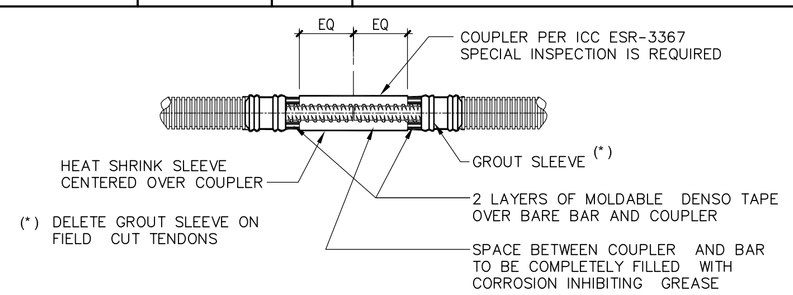

COUPLER INSTALLATION PROCEDURE:
1. APPLY CORROSION INHIBITING GREASE TO THE BARE ENDS OF THE BARS AND THE INSIDE OF THE COUPLER.
2. CONNECT THE TWO BAR ENDS WITH THE COUPLER. EACH END SHALL BE SCREWED INTO THE COUPLER HALF THE LENGTH OF THE COUPLER.
3. TORQUE BAR ENDS TOGETHER (200 FT. LBS).
4. ADD ANOTHER COAT OF GREASE TO BARE BAR AND COUPLER AND WRAP WITH TWO LAYERS OF DENSO TAPE.
5. CENTER HEAT SHRINK SLEEVE OVER COUPLER AND APPLY HEAT UNTIL SLEEVE IS FULLY RECOVERED.

PREPARATION FOR FIELD CUT BARS:
1. CUT CORROSION PROTECTION AND THREAD BAR WITH AN ABRASIVE SAW (DO NOT USE A TORCH).
2. CAREFULLY REMOVE 6" (± ½") CORRUGATED AND CEMENT GROUT FROM THE END OF THE NEW CUT.

DCP COUPLER DETAIL — N.T.S. — G

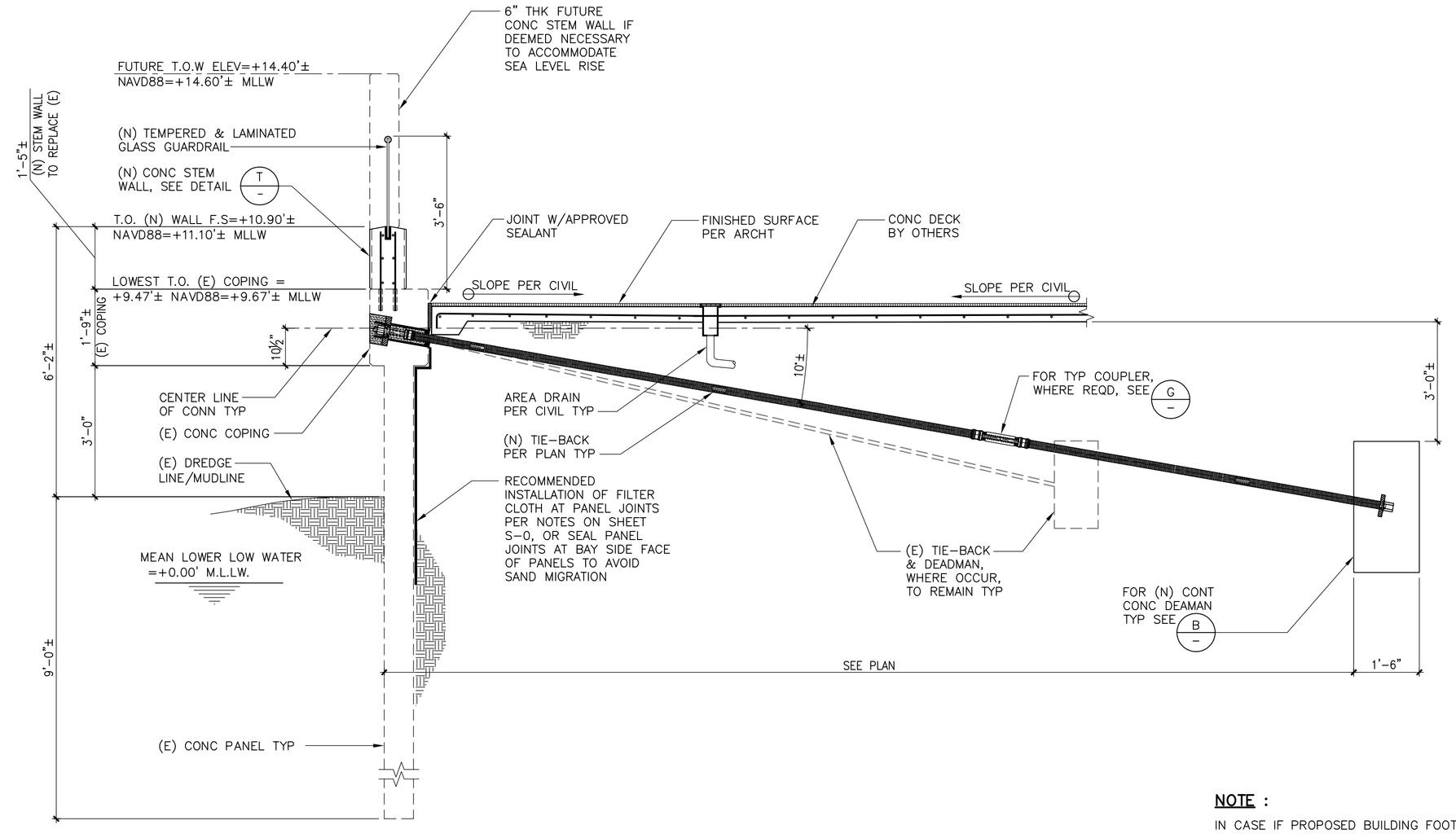

NOTE :
IN CASE IF PROPOSED BUILDING FOOTINGS INTERFERE WITH THE TIE-BACKS, DEEPEN FOOTINGS PER STRUCTURAL ENGINEER OF THE BUILDING REQUIREMENTS AND PROVIDE SCHEDULE 40 PVC SLEEVES FOR MINIMUM 2" CLEAR DISTANCE AROUND TIE-BACKS.

TYPICAL SECTION — N.T.S. — K

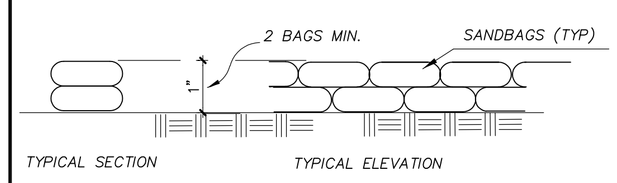

SANDBAG VELOCITY REDUCER DETAIL

VELOCITY REDUCER DETAIL — N.T.S. — L

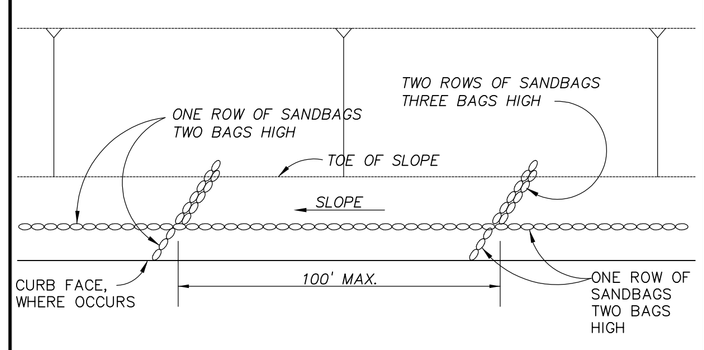

TOE OF SLOPE PROTECTION DETAIL

NOTE:
THIS DETAIL SHALL APPLY AT THE ENTIRE PERIMETER OF ANY EXCAVATED MATERIAL PILED UP AT THE PROJECT SITE IN COMPLIANCE WITH ITEM 6 UNDER "EROSION CONTROL NOTES" ON SHEET S-0.

TOE OF SLOPE PROTECTION — N.T.S. — R

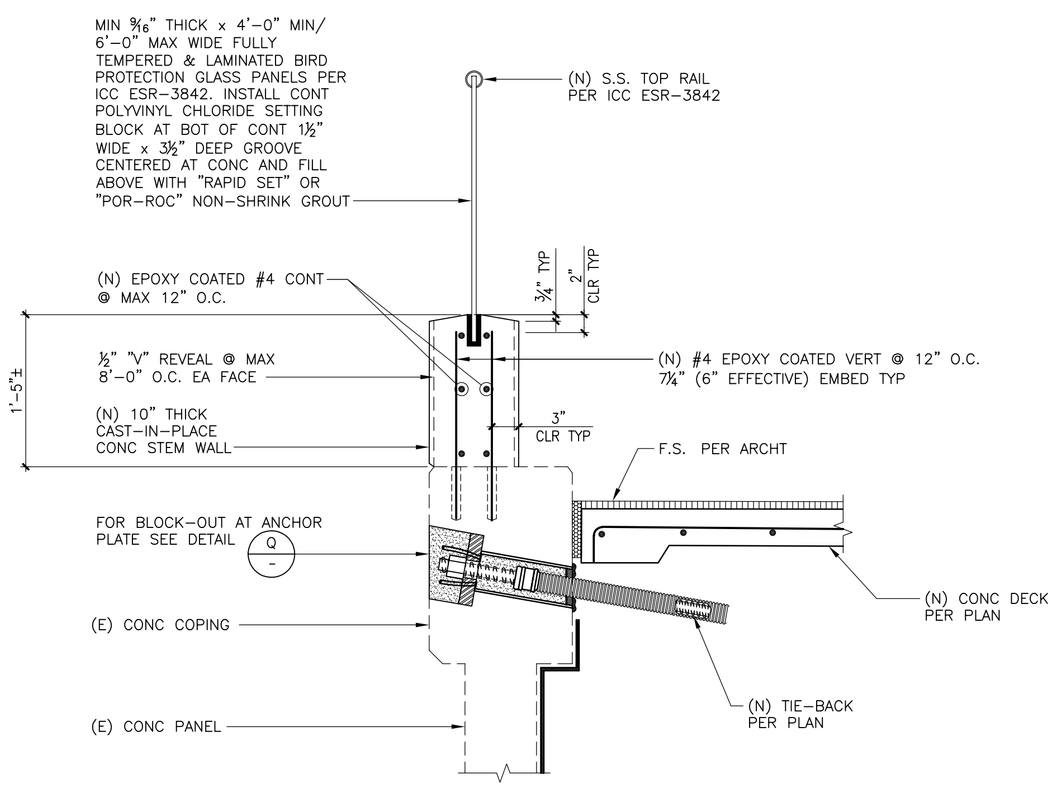

SECTION AT STEM WALL & GUARDRAIL — N.T.S. — T

California Coastal Commission
CDP 5-21-0908
Exhibit 2 p. 6 of 7

U

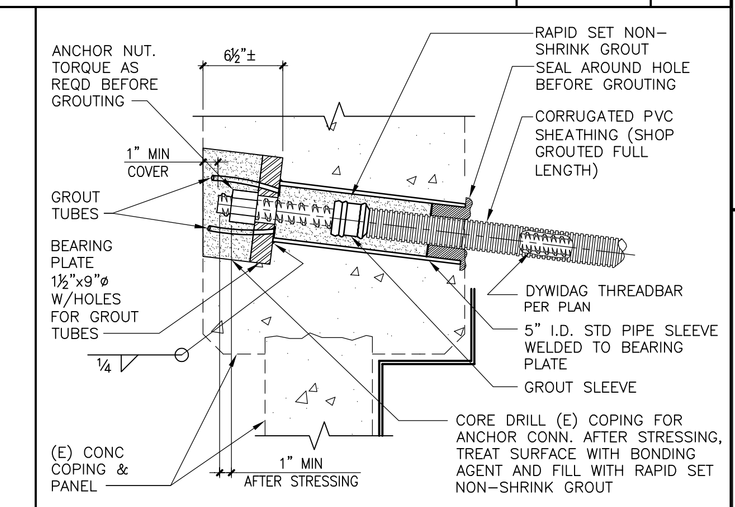

NOTE: CARE SHALL BE EXERCISED BY THE CONTRACTOR NOT TO CUT ANY OF THE EXISTING REINFORCING DURING THE CORE DRILLING FOR THE INSTALLATION OF THE CONNECTION SHOWN ABOVE.

CORE DRILL DETAIL — N.T.S. — Q

V

NO.	REVISIONS	DATE

OWNERSHIP OF DOCUMENTS
THESE PLANS, SPECIFICATIONS, AND REPORTS, AS WELL AS ALL IDEAS, DESIGNS, ARRANGEMENTS AND PLANS INDICATED OR REPRESENTED BY THIS DOCUMENT, ARE THE PROPERTY OF PMA CONSULTING, INC. WRITTEN PERMISSION OF PMA CONSULTING, INC. IS REQUIRED FOR THE USE OF THESE DOCUMENTS BY OTHER PERSONS OR ENTITIES FOR ANY PURPOSE WHATSOEVER. THESE DOCUMENTS WERE PREPARED FOR THE PROJECT SPECIFIED HEREIN AND ARE NOT TO BE USED FOR ANY OTHER PROJECT.
© PMA CONSULTING, INC.

REGISTERED PROFESSIONAL ENGINEER
PLAMEN BORTSSOV PETROV
No.C 66947
CIVIL
STATE OF CALIFORNIA
08/18/2021

PMA Consulting, Inc.
Consulting Structural Engineers
28161 Castaic Ct., Laguna Niguel, CA 92677
Phone: (714) 717-5942
E-Mail: P.Petrov@PMAEng.com

OWNER / APPLICANT
JAY & NANCY SCHULMAN
16201 MEADOWRIDGE WAY
ENCINO, CA 91436

REINFORCING THE EXISTING SEAWALL
LOCATED AT:
1615 EAST BAY AVE
NEWPORT BEACH, CA 92661

DETAILS

DATE	JOB NO.	DRAWN	CHECKED
08/18/2021	411121	T.PETROV	P.PETROV

SHEET OF

SW-2

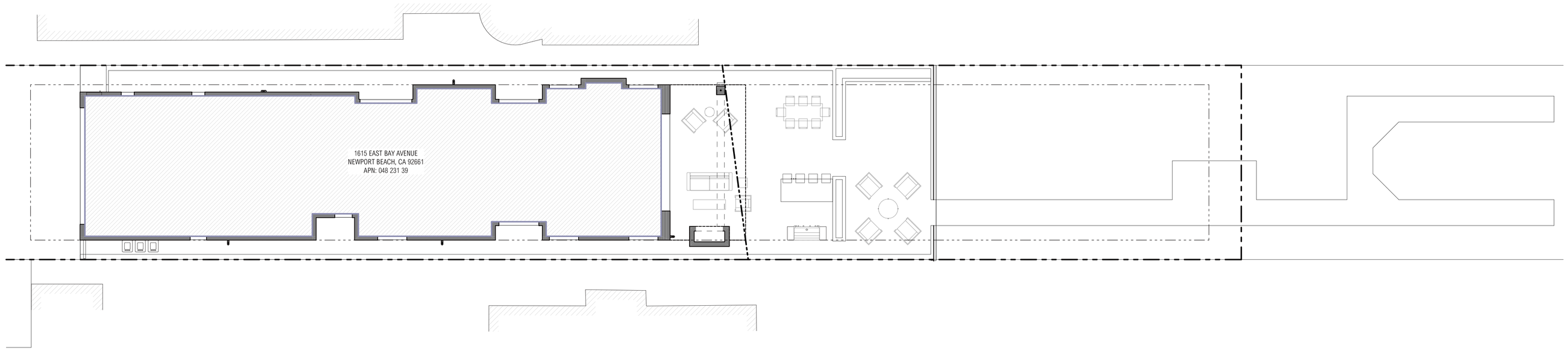

SITE PLAN 1
SCALE: 1/8" = 1'-0"

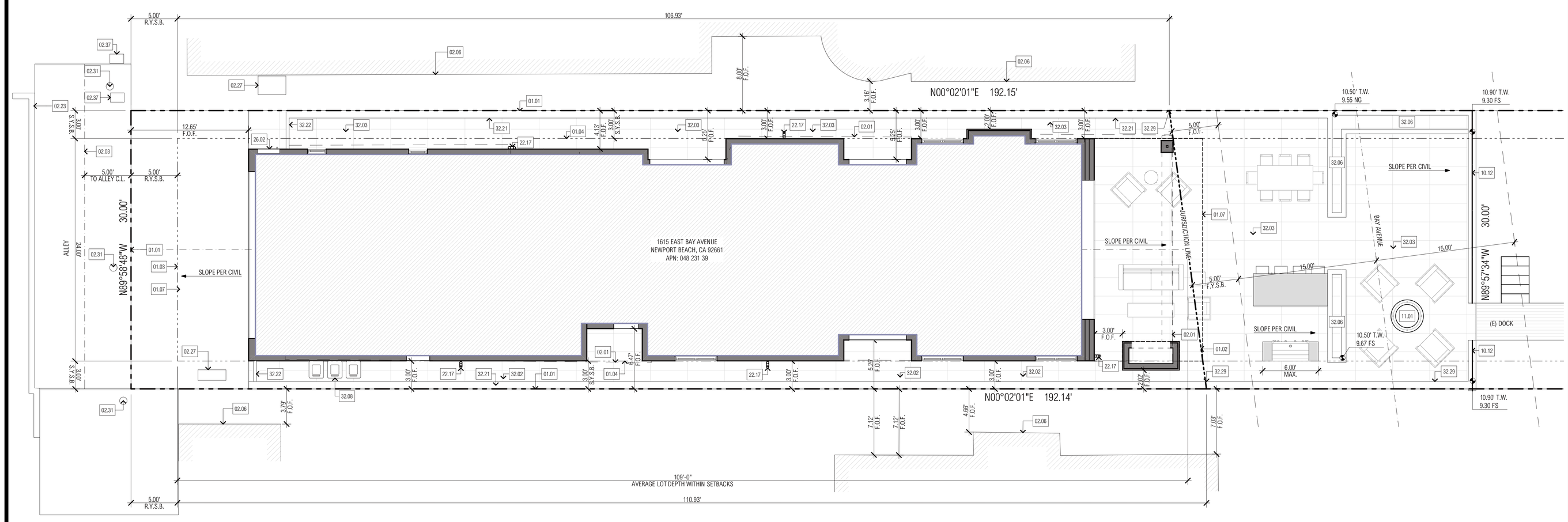

ENLARGED SITE PLAN 2
SCALE: 3/16" = 1'-0"

TRUE NORTH PROJECT NORTH

DIMENSION NOTE:
ALL DIMENSIONS ARE TO FACE OF SHEATHING (EXT. WALLS) OR FACE OF STRUCTURE (F.O.S.) TYP. U.N.O. ROUNDED TO THE NEAREST 1/8" AND INTERIOR PARTITIONS ARE DIMENSIONED FROM FACE OF STRUCTURE TO FACE OF STRUCTURE (F.O.S.) U.N.O. - CONTACT ARCHITECT IN WRITING FOR ANY CLARIFICATION OF NOTED DIMENSIONS, DO NOT SCALE PLANS.

GENERAL NOTE:
SEE SHEET A-3.0 FOR ROOF PLAN INFORMATION NOT SHOWN ON THIS SHEET (INCLUDING EAVE DETAILS AND PROJECTION DISTANCES).

C.N.B. NOTES:
1. ISSUANCE OF A BUILDING PERMIT BY THE CITY OF NEWPORT BEACH DOES NOT RELIEVE APPLICANTS OF THE LEGAL REQUIREMENTS TO OBSERVE COVENANTS, CONDITIONS AND RESTRICTIONS WHICH MAY BE RECORDED AGAINST THE PROPERTY OR TO OBTAIN PLANS YOU SHOULD CONTACT YOUR COMMUNITY ASSOCIATIONS PRIOR TO COMMENCEMENT OF ANY CONSTRUCTION AUTHORIZED BY THIS PERMIT.

2. PRIOR TO PERFORMING ANY WORK IN THE CITY RIGHT-OF-WAY AN ENCROACHMENT PERMIT MUST BE OBTAINED FROM THE PUBLIC WORKS DEPARTMENT.

3. A CAL-OSHA PERMIT IS REQUIRED FOR EXCAVATIONS DEEPER THAN 5' AND FOR SHORING AND UNDERPINNING.

4. ELECTRICAL SERVICE TO BE UNDERGROUND FOR NEW CONSTRUCTION, REPLACEMENT BUILDING OR ADDITIONS TO AN EXISTING BUILDING EXCEEDING 50% OF THE GROSS FLOOR AREA OF THE EXISTING BUILDING. (NBMC 12.32.015)

5. FIELD INSPECTOR TO REVIEW AND APPROVE UNDERGROUND ELEC. SERVICE REQUIREMENT PRIOR TO CONCRETE PLACEMENT.

6. EDISON COMPANY APPROVAL IS REQUIRED FOR METER LOCATION PRIOR TO INSTALLATION.

LANDSCAPE NOTES:
1. ENCROACHMENT PERMIT REQ'D. FOR ANY WORK PROPOSED IN THE PUBLIC R.O.W.

2. IF APPLICABLE, REF. PRELIMINARY LANDSCAPE PLANS, FOR ALL HARDSCAPE & PLANTING AREAS WITH RESPECTIVE HEIGHTS AND MATERIALS.

POOL:
1. PROVIDE AN ALARM FOR DOORS AND WINDOWS WITH SILL HEIGHTS LESS THAN 60-INCHES ABV.F.F. OF THE DWELLING THAT FORMS A PART OF THE POOL ENCLOSURE. THE ALARM SHALL BE LISTED AS A WATER HAZARD ENTRANCE ALARM IN ACCORDANCE WITH UL 2017. THE DEACTIVATION SWITCH SHALL BE AT LEAST 60" ABOVE THE FLOOR IF THE RESIDENCE IS NOT REQUIRED TO BE ACCESSIBLE. (CBC 3109 & ISPSC 305.4)

2. SUCTION OUTLETS SHALL BE DESIGNED AND INSTALLED WITH SUCTION ANTIENTRAPMENT GRATE IN ACCORDANCE WITH ANSI/APSP-16 PER CBC 3109 SECTION (B) OF 115928. SUCTION ENTRAPMENT AVOIDANCE FOR POOL AND SPA SHALL BE PROVIDED IN ACCORDANCE WITH APSP-7 PER ISPSC SECTION 310.

3. PROVIDE POWER SAFETY COVER IN COMPLIANCE WITH ASTM F1346-91 FOR POOL & SPA (CBC 3109 SECTION (3) OF 115922 & ISPSC 305).

4. POOL ENCLOSURE FENCE SHALL BE 60-INCHES MIN. ABV. FS/NG MEASURED ON THE SIDE THAT FACES AWAY FROM SWIMMING POOL W/. MAX VERTICAL CLEARANCE OF 2-INCHES BETWEEN FS/NG AND BOTTOM OF THE FENCE/BARRIER MEASURED ON THE SIDE OF FENCE THAT FACES AWAY FROM SWIMMING POOL. OPENING, GAP, AND VOID IN ENCLOSURE FENCE OR GATE SHALL NOT ALLOW THE PASSAGE OF 4-INCHES DIAMETER SPHERE OR LARGER. OUTSIDE SURFACE (FACING AWAY FROM SWIMMING POOL) OF THE POOL ENCLOSURE INCLUDING THE GATE TO BE FREE OF PROTRUSIONS, CAVITIES, OR OTHER PHYSICAL CHARACTERISTICS THAT WOULD SERVE AS HANDHOLDS OR FOOTHOLDS WHICH COULD ENABLE A CHILD FIVE YEARS OLD OR YOUNGER TO CLIMB OVER. (CBC 3109 & ISPSC 305)

A SITE PLAN NOTES

N90° 00' 00"E 78.25'
ROOM NAME
15'-6"
01.13

PROPERTY LINE TAG

ROOM TAG

REVISION TAG

SPOT ELEVATION

KEYNOTE TAG

RECESSED MAIN SERVICE PANEL - 400 AMP MAX. (MAINTAIN 36" CLEAR FROM FACE OF PANEL TO ANY OBSTRUCTION) – GC TO COORDINATE W/. UTILITY COMPANY

EXT. STAIRS - MAX. 7.75" RISE, MIN. 10" RUN, PROVIDE ARTIFICIAL LIGHT SOURCE AT THE TOP LANDING AND FOR STAIR TO THE BASEMENT AT BOTH TOP AND BOTTOM LANDING (R303.8) - REF. DTL. 3/AD-1 -VERIFY TREADS DEPTH AND RISERS HT. W/. CIVIL AND LANDSCAPE DWGS

A/C CONDENSER / HEAT PUMP - TO BE IN COMPLIANCE OF SECTION 307.3 OF CPC AS SELECTED, VERIFY W/. OWNER – SIZE TBD, SEE T-24 ENERGY REPORT FOR MORE INFO – PROVIDE POWER AND SOUND DAMPENING PAD AS REQ'D. – INSTALL AND MAINTAIN REQUIRED CLEARANCES PER MFGR. INSTRUCTION

BARBEQUE - AS SELECTED TO BE LISTED AND APPROVED, VERIFY W/. OWNER – PROVIDE POWER AND GAS AS REQUIRED – INSTALL AND MAINTAIN CLEARANCES PER MFGR. AND SECTION 308 OF CFC

FIREPIT - AS SELECTED TO BE LISTED AND APPROVED, VERIFY W/. OWNER – PROVIDE POWER AND GAS AS REQUIRED – INSTALL AND MAINTAIN CLEARANCES PER MFGR. AND SECTION 308 OF CFC

TRASH CANS - SCREEN FROM STREET AND PROVIDE MIN. CLEARANCES AS REQ'D.

VERTICAL STORM DRAIN PIPE IN-WALL (○) / OVERFLOW (⊘)- MTL. PIPE PER CHAPTER 11 OF CPC, SIZE PER TABLE 1103.1 (MIN. 2" DIA. PIPE & TYP. 3" DIA. PIPE) – SEE CIVIL DWGS. FOR TERMINATION DTLS. ABV. OR BLW. GROUND. VERIFY ALL TERMINATION POINTS, TYPE AND DETAILS W/. CIVIL PRIOR TO POURING THE CONCRETE SLAB

B ANNOTATION LEGEND

01.01 PROPERTY LINE
01.02 FRONT YARD SETBACK
01.03 REAR YARD SETBACK
01.04 SIDE YARD SETBACK
01.07 LINE OF SECOND FLOOR ABOVE
02.01 FOOTPRINT OF EXISTING STRUCTURE
TO BE REMOVED
02.03 CENTERLINE/FLOWLINE OF ALLEY
02.06 EXISTING STRUCTURE
NOT A PART
02.23 (E.) NEIGHBORING SITE WALL AND FENCE
NOT A PART
02.27 (E.) GAS METER LOCATION
REF. SURVEY & CIVIL DWGS.
02.31 (E.) SEWER C.O. LOCATION
REF. SURVEY & CIVIL DWGS.
02.37 (E.) WATER METER LOCATION
REF. SURVEY & CIVIL DWGS.
10.12 EXTERIOR GLASS RAILING
TEMPERED & LAMINATED BIRD PROTECTION PANELS PER ICC ESR-3842 AT SEAWALL WITH MAX. OF 42" FROM EG - TOP OF RAIL AT 12.97'- 4" MAX. SPHERE OPENING - REF. DTL. 4/AD-1 AND SEAWALL DRAWINGS
11.01 FIREPIT
SHALL NOT EXCEED A HEIGHT OF 42 INCHES, MEASURED FROM EXISTING GRADE. PROVIDE GAS STUB-OUT, REF. LAND. DWGS., VERIFY W/. OWNER
22.17 DOWNSPOUT
ALUMINUM W/. KYNAR FINISH OR EQUIV. - AS SEL. (ARCH. TO APPROVE)
26.02 RECESSED MAIN SERVICE PANEL
400 AMP MAX. (MAINTAIN 36" CLEAR FROM FACE OF PANEL TO ANY OBSTRUCTION)
32.02 (N.) HARDSCAPE
CONCRETE, REF. CIVIL AND LAND. DWGS.
32.03 (N.) HARDSCAPE
STONE PAVERS (AS SELECTED), REF. CIVIL AND LAND. DWGS.
32.06 PLANTED AREA
COORDINATE WITH LANDSCAPE DESIGNER, REF. LAND. DWGS.
32.08 TRASH LOCATION
SCREEN FROM STREET AS NEEDED
32.21 (N.) PROPERTY LINE WALL
PLASTER FINISH TO MATCH (MAX. 6' ABV. N.G.)
32.22 (N.) WOOD GATE
AS SELECTED (MAX. 6' HT. ABOVE NATURAL GRADE)
32.29 (N) PROPERTY LINE WALL
PLASTER FINISH TO MATCH (MAX. 42" ABV. N.G. WITHIN FRONT SETBACK)

C KEYNOTES

California Coastal Commission
CDP 5-21-0908
Exhibit 2 p. 7 of 7

BRANDON ARCHITECTS
151 KALMUS DRIVE, SUITE G-1
COSTA MESA, CA 92626
714.754.4040
WWW.BRANDONARCHITECTS.COM

PROJECT STATUS
CDP SEAWALL

PLAN CHECK NO.
5-21-0908

PROJECT CONTACT
RYAN MCCDANIEL, AIA

These documents are the property of BRANDON ARCHITECTS INC., and are not to be duplicated, altered or utilized in any or by any other party without the expressed authorization of BRANDON ARCHITECTS. Any unauthorized duplication or alteration of these documents by any party is a violation of BRANDON ARCHITECTS expressed common law copyright and other property rights thereto, and is subject to full civil liabilities and penalties. These plans are also not to be assigned to any third party without obtaining written authorization and expressed permission by BRANDON ARCHITECTS, who shall then be held harmless and absolved of any liability regarding any use of these documents by such third party whether depicted or implied hereon.

PROJECT NAME
SCHULMAN RESIDENCE

PROJECT ADDRESS
1615 E BAY AVE
NEWPORT BEACH, CA 92661

OWNER INFORMATION
JAY & NANCY SCHULMAN
16201 MEADOWRIDGE WAY
ENCINO, CA

DATE
02/01/2022

REVISIONS

NO.	REVISIONS	DATE

ARCHITECTURAL SITE PLAN

A-0.1A